ITM	PART #	QTY	DESCRIPTION
1	STR0067	2	RIGHT ACCESS POST 30"
2	STR0069	2	LEVELOR PLATE
3	STR0068	2	LEFT ACCESS POST 30"
4	STR0066	1	HANDRAIL 42"
5	S-4275	8	BOLT HHTB 5/16-18 x 3/4" ZN GR 5
6	S-396	12	NUT 5/16-18
7	S-277	4	BOLT HHBIN 5/16-18X1-1/4 YDPG5

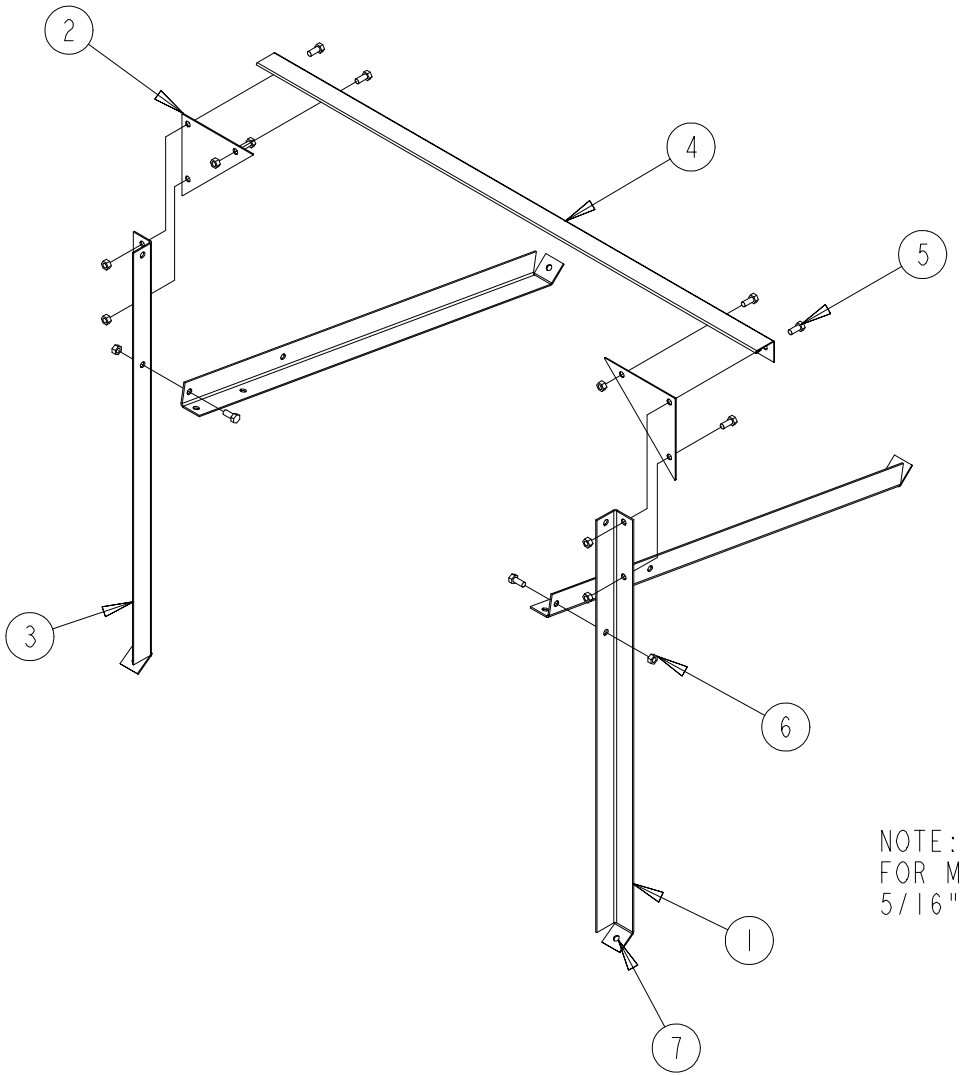

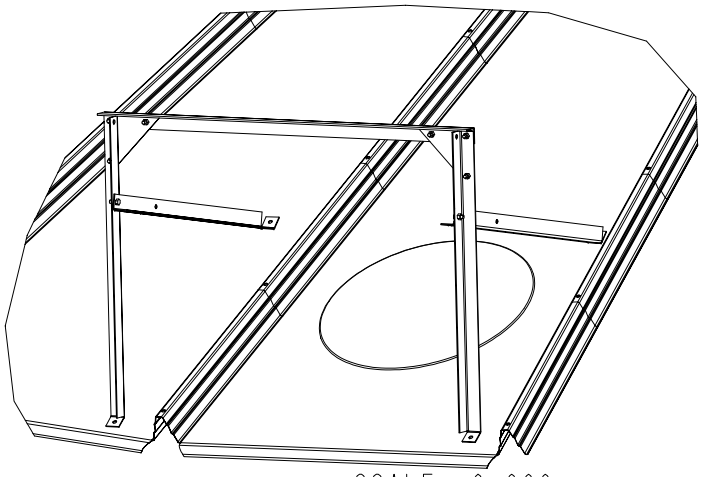

SCALE 0.060

NOTE: FIELD DRILL HOLES IN ROOF PANEL
FOR MOUNTING. USE 5/16" BIN BOLTS (7) AND
5/16" NUTS (6) TO ATTACH THE MANHOLE HANDRAIL.

No.	ECN	Revision Description	Date	By

THE GSI GROUP
Assumption, IL
Engineering Division:
GRAIN SYSTEMS

MANHOLE ACCESS HANDRAIL
SIDEWALL STAIRS

TOLERANCES (Unless Noted)
Fractions +/- 1/32"
Decimals +/- .031
Angles +/- 1.00

Stock Size N/A			
Material N/A			
Sheet 1 of 2		IMW N/A	Drawing No.
Weight Index N/A	Sq. Ft. N/A	Ship Wt. 654.333	PNEG-1277
Drawn By geh	Date 06-Dec-01	Scale NONE	
Checked By geh	Date 00-00-00	Work to Dimensions Do Not Scale	