Centrifugal Fan Installation and Operation

Owner's Manual

PNEG-163-08

Version: 2.**3**

Date: 09-**20-20**

PNEG-163-08

Check List

1. All wire connections
2. Tip clearance on blade
3. Fan blade torqued to torque specs
4. Grill guard in place and tight
5. Fuse in place, extra fuse provided
6. Motor rotation correct
7. Contactor engages properly
8. Running amperage
9. Vibration
10. All fasteners tight
11. Indicator light
12. All decals and serial number tag
13. Aesthetic appearance
14. Manual
15. Manual supplements for double inlet fans

Model #: _____

Serial #: _____

Tester Signature: _____

Date: _____

All information, illustrations, photos, and specifications in this manual are based on the latest information available at the time of publication. The right is reserved to make changes at any time without notice.

Contents

Chapter 1 Safety 5
Safety Guidelines 5
Cautionary Symbols Definitions 6
Safety Cautions 7
Safety Sign-Off Sheet 11

Chapter 2 Safety Decals 12

Chapter 3 Installation 16
Pre-Installation Requirements 16
Fan Installation 17
Electrical Installation 17
Test Run 18
Ground Rod Installation 19

Chapter 4 Fan Specifications 20
1750 RPM Fan Electrical Specifications 20
3500 RPM Fan Electrical Specifications 21
Fan Dimensions 22
Discharge Bolt Pattern Dimensions 23
Inlet Cone Dimensions 24
Fan Wheel Dimensions 25
Fan Pad Location 26

Chapter 5 Operation 27
Fan Start-Up 27
Fan Shut Down 27
Maintaining Grain Quality 27
Grain Storage 28

Chapter 6 User Servicing Instructions and Troubleshooting 29
Fan Wheel Removal and Installation 29
Removing the Fan Wheel Assembly 29
Installing the Fan Wheel Assembly 30
Fan Wheel Inspection and Maintenance 32
Taper-Lock Bushing Torque Requirements 33
Fan Motor Removal and Installation 33
General Inspection 33
Lubrication and Bearings 34
Troubleshooting Charts 35

Chapter 7 Parts List 37
Main Assembly - 1750 RPM Fans 38
Main Assembly - 3500 RPM Fans 43
Main Assembly - Double Inlet Fan 48
Internal Bearing Arch Assembly - Double Inlet Fan 49
Motor Drives - Double Inlet Fan 50
Shaft Coupling 51
Small Control Panel 1 Phase 230 Volt (CPS-230-1) 52
Small Control Panel 3 Phase 230 Volt (CPS-230-3) 54
Large Control Panel 3 Phase 230 Volt (CPL-230-3) 56
Small Control Panel 3 Phase 380V, 460V and 575V (CPS-345-3) 58
Large Control Panel 3 Phase 460V and 575V (CPL-345-3) 60
Motor Conduit Assembly 62

Table of Contents

Chapter 8 Schematics/Wiring Diagrams 68
Wiring Schematic - 230 Volt 1 Phase 68
Wiring Diagram - CHS-3-1C 70
Wiring Diagram - CF-10-1C and CHS-10-1C 71
Wiring Diagram - CF-15-1C 72
Wiring Diagram - CF-5-1C, CF-7.5-1C, CHS-5-1C and CHS-7.5-1C 73
Wiring Schematic - 230 Volt 3 Phase 74
Wiring Diagram - 230 Volt 3 Phase 75
Wiring Schematic - 460 Volt 3 Phase 76
Wiring Diagram - 460 Volt 3 Phase 77

Chapter 9 Appendix A 78
Double Inlet Fans 78

Chapter 10 Warranty 79

Safety Guidelines

Safety guidelines are general-to-specific safety rules that must be followed at all times. This manual is written to help you understand safe operating procedures and problems that can be encountered by the operator and other personnel when using this equipment. Save these safety guidelines for future reference.

As owner or operator, you are responsible for understanding the requirements, hazards, and precautions that exist and to inform others as required. Unqualified persons must stay out of the work area at all times.

Alterations must not be made to the equipment. Alterations can produce dangerous situations resulting in SERIOUS INJURY or DEATH.

This equipment must be installed in accordance with the current installation codes and applicable regulations, which must be carefully followed in all cases. Authorities having jurisdiction must be consulted before installations are made.

When necessary, you must consider the installation location relative to electrical, fuel and water utilities.

Personnel operating or working around equipment must read this manual. This manual must be delivered with equipment to its owner. Failure to read this manual and its safety instructions is a misuse of the equipment.

ST-0001-3

Cautionary Symbols Definitions

Cautionary symbols appear in this manual and on product decals. The symbols alert the user of potential safety hazards, prohibited activities and mandatory actions. To help you recognize this information, we use the symbols that are defined below.

DANGER This symbol indicates an imminently hazardous situation which, if not avoided, **will result in serious injury or death.**

WARNING This symbol indicates a potentially hazardous situation which, if not avoided, **can result in serious injury or death.**

CAUTION This symbol indicates a potentially hazardous situation which, if not avoided, **can result in minor or moderate injury.**

NOTICE This symbol is used to address practices not related to personal injury.

This symbol indicates a general hazard.

This symbol indicates a prohibited activity.

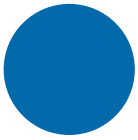

This symbol indicates a mandatory action.

ST-0005-2

Safety Cautions

Use Personal Protective Equipment

- Use appropriate personal protective equipment:

Eye Protection

Respiratory Protection

Foot Protection

Hearing Protection

Head Protection

Fall Protection

Hand Protection

- Wear clothing appropriate to the job.
- Remove all jewelry.
- Tie long hair up and back.

ST-0004-1

Follow Safety Instructions

- Carefully read all safety messages in this manual and safety signs on your machine. Keep signs in good condition. Replace missing or damaged safety signs. Be sure new equipment components and repair parts include the current safety signs. Replacement safety signs are available from the manufacturer.
- Learn how to operate the machine and how to use controls properly. Do not let anyone operate without instruction.
- If you do not understand any part of this manual or need assistance, contact your dealer.

ST-0002-1

Maintain Equipment and Work Area

- Understand service procedures before doing work. Keep area clean and dry.
- Never service equipment while it is operating. Keep hands, feet, and clothing away from moving parts
- Keep your equipment in proper working condition. Replace worn or broken parts immediately.

ST-0003-1

Keep Hands Away from Moving Parts

- Do not operate the fan with electrical or mechanical guards removed. Serious injury or death can result.
- Do not put hand or arm in fan. Rotating parts can crush and dismember.
- Do not put any kind of tool inside the fan to clear debris while the fan is operating. Damage to the equipment will result.
- Lock-out power source before making adjustments, cleaning or maintaining equipment.

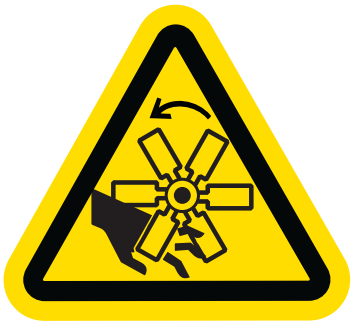

ST-0020-2

Lifting Hazard

- Single person lift can cause injury.
- Use a mechanical lifting device to lift or move the equipment during installation.

ST-0021-2

Install and Operate Electrical Equipment Properly

- Electrical controls must be installed by a qualified electrician and must meet the standards set by applicable local codes (National Electrical Code for the US, Canadian Electric Code, or EN60204 along with applicable European Directives for Europe).
- Lock-out power source before making adjustments, cleaning, or maintaining equipment.
- Make sure all equipment and bins are properly grounded.

ST-0075-1

Prevent Roof Damage Due to Vacuum Pressure

- Roof damage can result from excessive vacuum or internal pressure from fans or other air moving systems. The manufacturer does not warrant this type of roof damage.
- Adequate ventilation or “makeup air” devices should be provided for all powered air handling systems.
- The manufacturer does not recommend the use of downward flow systems (suction).
- Severe roof damage can result from any blockage of air passages.
- Operating fans during high humidity or cold weather conditions can cause air exhaust or intake ports to freeze.

ST-0028-2

Sharp Edge Hazard

- This product has sharp edges, which can cause serious injury.
- To avoid injury, handle sharp edges with caution and always use proper protective clothing and equipment.

ST-0036-2

Handle and Use Equipment Properly

- Equipment is intended for the use of grain drying only. Any other use is a misuse of this equipment.
- The operating instructions in this manual pertain to the common cereal grains as indicated. When drying any other grain, contact GSI for additional recommendations.
- On LP fired units, set pressure regulator to avoid excessive gas pressure applied to the burner during ignition and operation. Do not exceed maximum recommended drying temperatures.
- Equipment has sharp edges that may cause serious injury. To avoid injury, handle sharp edges with caution and use proper protective clothing and equipment at all times.
- All guards must be in place before and during operation. Images of guards removed in this manual are for illustration purposes only.
- Use caution when working around high-speed fans, gas burners, augers and auxiliary conveyors which can start automatically.
- Keep hands, feet and clothing away from moving parts.
- Do not bypass any safety device or interlock.
- Do not enter the dryer or bin while it is operating.
- Do not operate in an area where combustible material will be drawn into the dryer.

ST-0029-2

Safety Sign-Off Sheet

Below is a sign-off sheet that can be used to verify that all personnel have read and understood the safety instructions. This sign-off sheet is provided for your convenience and personal record keeping.

Date	*Employee Name*	*Supervisor Name*

ST-0007

2. Safety Decals

Safety decals should be read and understood by all people in the grain handling area. If a decal is damaged or is missing contact:

GSI Decals
1004 E. Illinois St.
Assumption, IL. 62510
Phone: 1-217-226-4421

A free replacement will be sent to you.

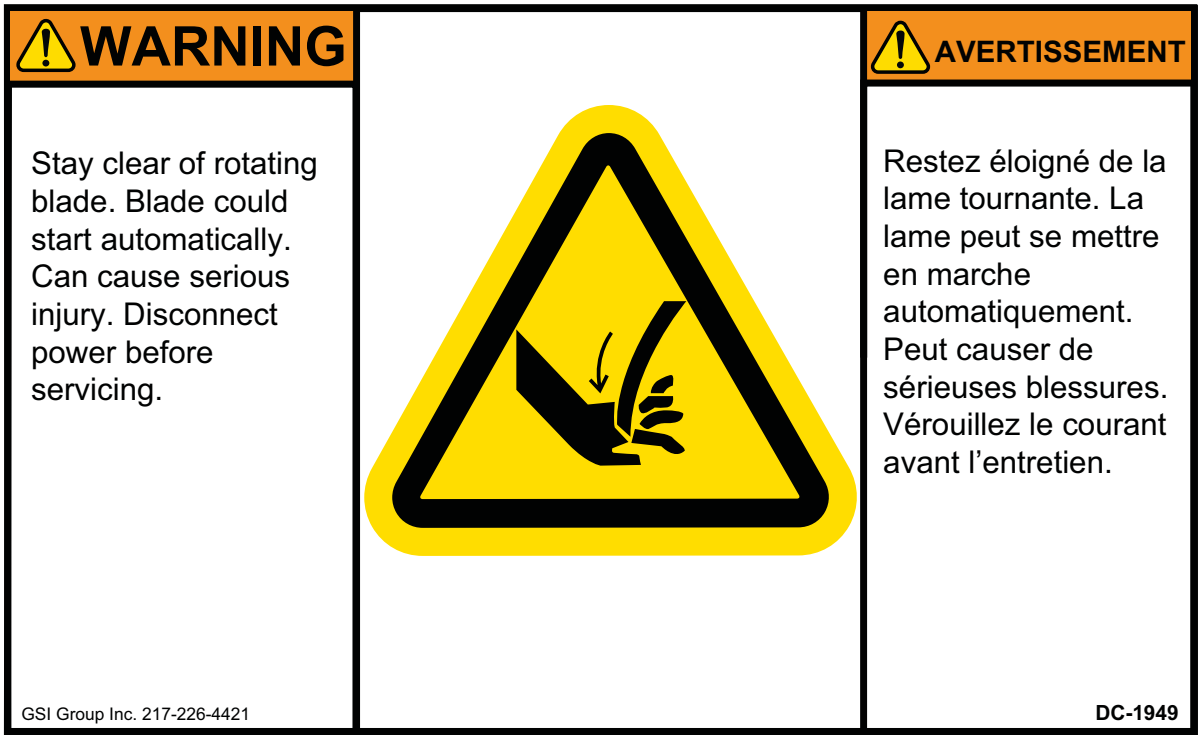

Part #: DC-1949
Size: 4-7/8" x 3"
Located on fan housing side near fan inlet.

Part #: DC-1948
Size: 4-3/8" x 1-3/8"
Located inside control box.

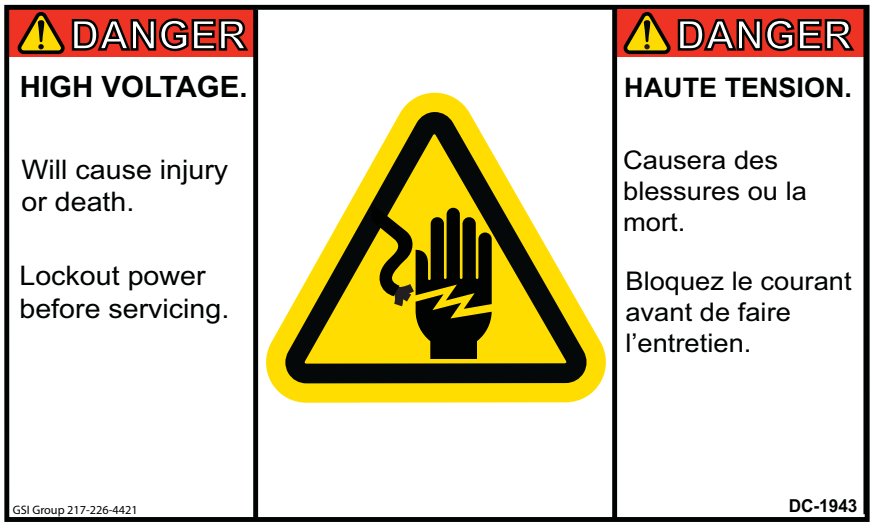

Part #: DC-1943
Size: 5" x 3"
Located on fan housing side above motor and located on outside of control box lid.

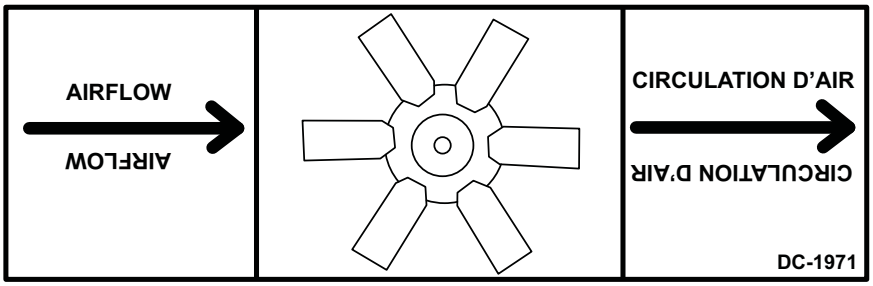

Part #: DC-1971
Size: 4-3/4" x 1-1/2"
Located on painted inlet cone of fan housing.

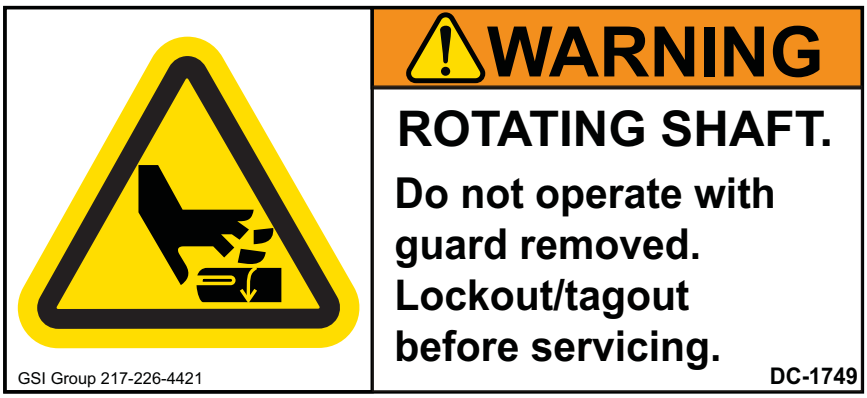

Part #: DC-1749
Size: 3-3/4" x 1-3/4"
Located on fan coupling guard on motor driven fans.

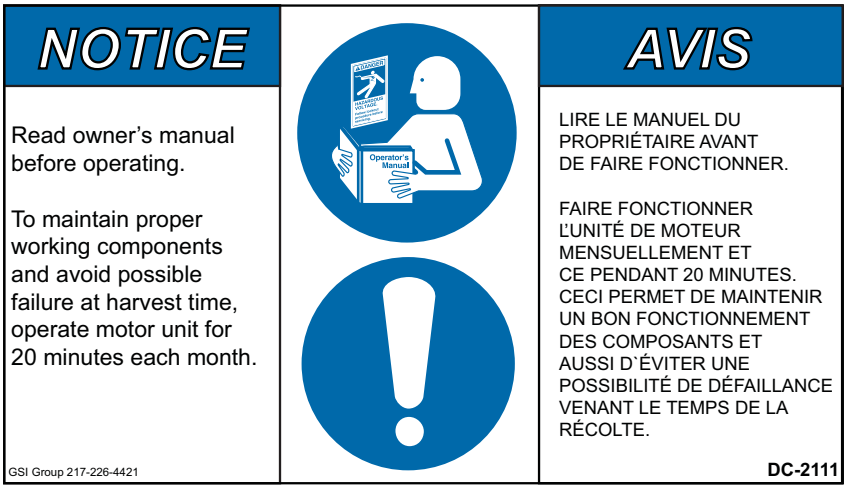

Part #: DC-2111
Size: 3" x 5"
Located on fan housing motor side.

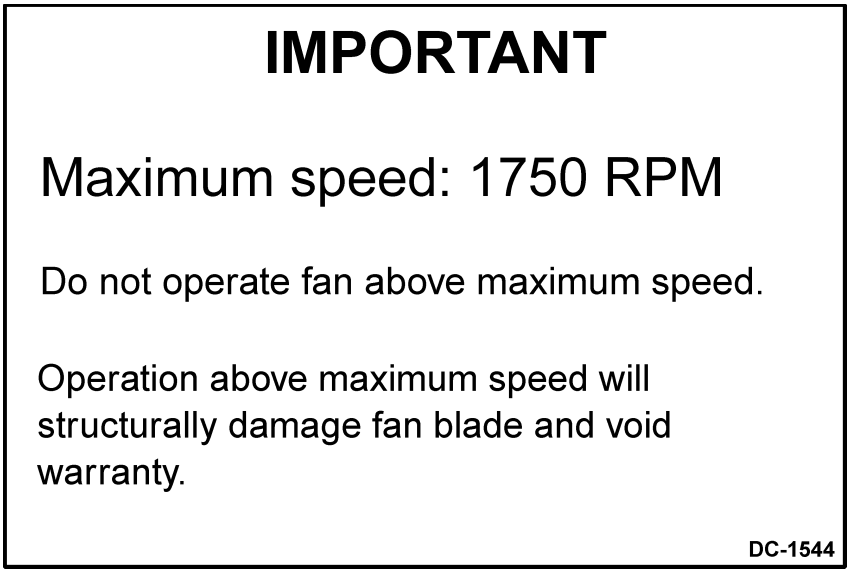

Part #: DC-1544
Size: 4" x 6"
Located on fan housing motor side.

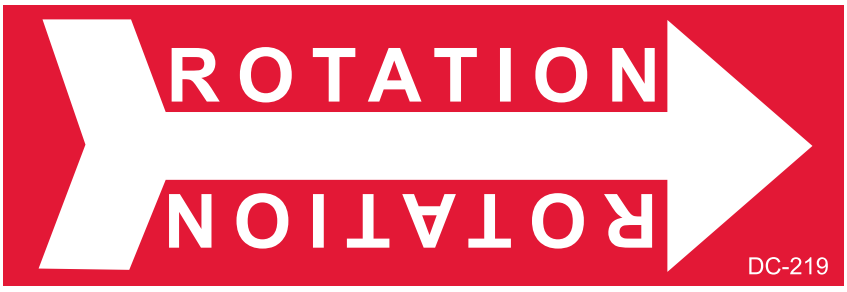

Part #: DC-219
Size: 3-1/2" x 1"
Located on fan inlet cone.

Roof Damage Warning and Disclaimer

The manufacturer does not warrant any roof damage caused by excessive vacuum or internal pressure from fans or other air moving systems. Adequate ventilation and/or "makeup air" devices should be provided for all powered air handling systems. The manufacturer does not recommend the use of downward flow systems (suction). Severe roof damage can result from any blockage of air passages. Running fans during high humidity/cold weather conditions can cause air exhaust or intake ports to freeze.

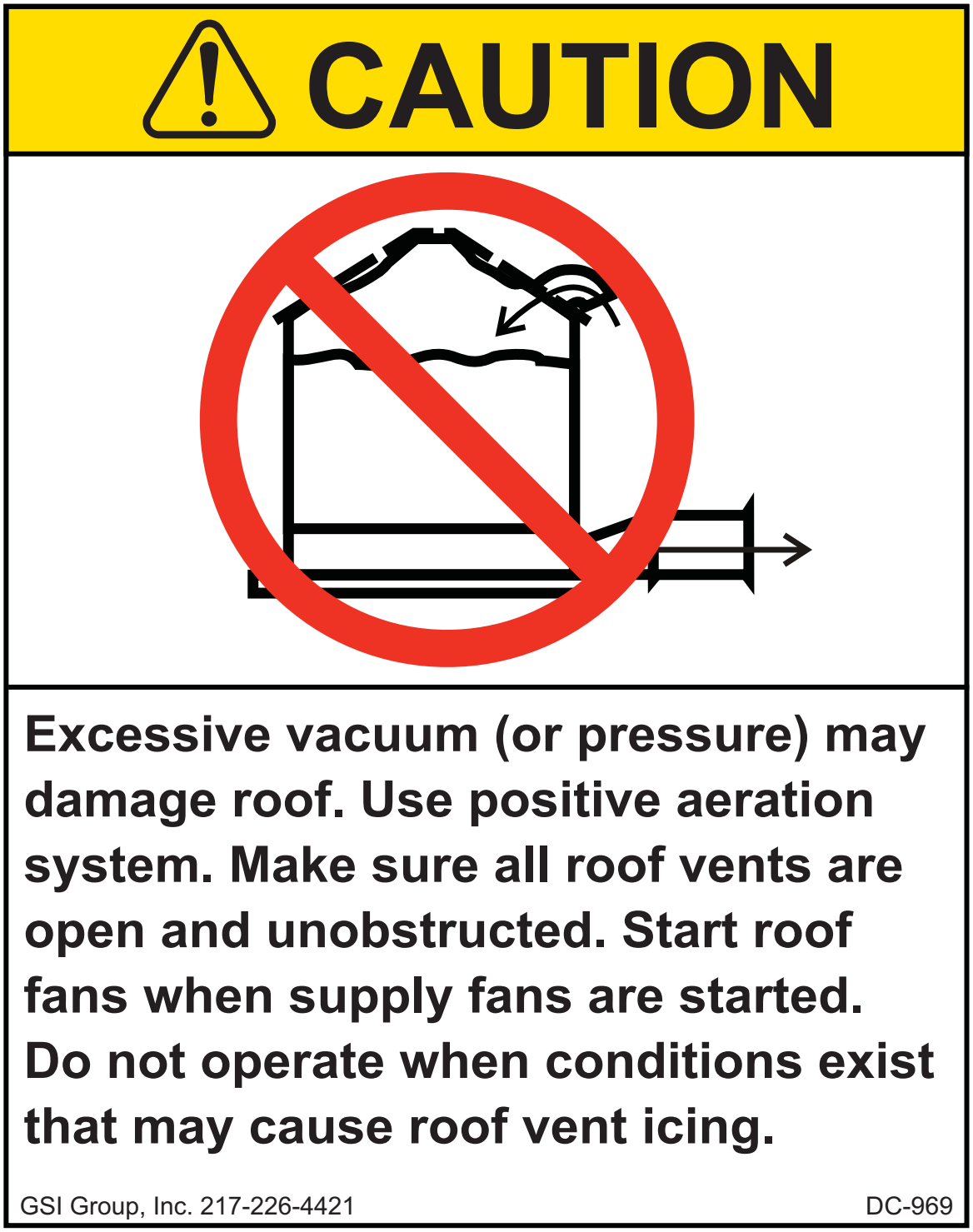

Pre-Installation Requirements

Foundation

Use the dimension illustration in the specifications section *on Page 22* of this manual to determine the physical size of the fan to be installed. Use the dimensions shown to determine the position of the fan installation with respect to other equipment.

For proper operation of the fan, the unit is to be mounted on a level pad. The fan should not be anchored to the pad, but it should be allowed to “float” on the pad. The fan pad should be offset 2" below the top of the bin foundation. Refer to *Figure 4F on Page 26* in the specifications section of this manual for recommendations of pad placement with respect to various catalog transition ducts.

Transition

The transition duct should be all metal construction, with a gradual angle to the rectangular opening in the bin wall. The duct should allow for a smooth transition with minimal resistance of the airflow from the fan discharge to the bin plenum. Keep the entrance of the plenum as clear as possible from obstructions by floor support.

Roof Exhaust

Adequate exhaust air openings in the roof are required to prevent any additional back pressure from building in the bin. See roof damage warning *on Page 15*.

Power Supply

Adequate power must be supplied to the fan for reliable operation. Consult the local power company and have a representative survey the installation. Only the power company can ensure that their system is sized properly to provide adequate service to the installation and new equipment.

Wire Size

Undersized wire can lead to voltage drop which causes motor overheating and shortened motor life. Use the electrical specifications chart *on Page 20* in this manual to size the supply wire according to the horsepower of the fan and the distance to the power supply. Refer to the fan specifications *on Page 20* to find the full load current of the motor for a given fan size. The full load current can also be found on the motor nameplate.

Service Disconnect

Each fan motor must be supplied with an independent power circuit, equipped with a fused disconnect switch. Locate this switch near the unit, as the power should be shut off before servicing the fan.

It is the customer’s responsibility to provide a fused disconnect and motor overload protection. These must be properly sized and connected to allow proper motor operation. Failure to provide these components could cause severe motor damage and void the manufacturer’s warranty.

Fan Installation

1. Remove packaging materials and inspect fan for any shipping damages. Report these at once to the shipper.
2. Check all fasteners on the fan to make sure they are tight. (Fasteners may loosen during shipment.) Tighten any loose fasteners, check for proper clearance and retighten.
3. Check all electrical connections that may have loosened during shipment.
4. Rotate the fan wheel. Wheel should rotate freely and should not make contact with the housing sides or inlet cone.
5. Place fan in proper location on the fan pad. Attach fan to transition duct and seal connection with caulk.
6. Check all joints and seams around the lower part of the bin. Verify that these are well sealed to prevent air leakage from the bin plenum. Inspect the transition duct as well. Seal any leaks that may be present to prevent air losses that reduce fan efficiency.
7. Level fan. Fan pad should be poured flat and level, however, it may be necessary to adjust the legs provided on the fan housing to level the fan. The legs should be adjusted so that when level, all five (5) legs touch the pad. Fans not resting on support legs may have excess vibration which can lead to premature wear and tear on fan components.

Always disconnect and lock out power before working on or around fan.

IMPORTANT: *Electrical installation must be performed by a qualified electrician, in accordance with National and Local Electrical Codes. Any violation of electrical wiring codes could jeopardize the warranty.*

Electrical Installation

1. Verify that the incoming power supply has been deemed adequate by the local power company.
2. Verify that the wiring supplying power to the fan is sized correctly for the distance away from supply and fan horsepower. (See tables in specification section *on Page 20*.)
3. Verify that the safety disconnect is installed and sized correctly for the fan size. (See tables in specification section *on Page 20*.)
4. Install a machine to earth ground for each individual fan. Refer to the ground rod installation *on Page 19*.
5. The following wires must be supplied to each fan. Units without control transformers require a separate neutral and earth ground connection.

1 PH 230V	L1, L2, N, G
3 PH 230V	L1, L2, L3, N, G
3 PH 230V with Optional Transformer Kit	L1, L2, L3, G
3 PH 460V/575V	L1, L2, L3, G

6. The starter controls require 115 VAC power to operate. On 230 volt 3 phase units, this power is supplied by L1 to neutral.

CAUTION

The voltage between L1 and N must be 115 VAC. Any other voltage will cause damage to equipment.

Check this voltage before starting unit. If voltage is not within 105 VAC-125 VAC, check for proper voltage on L2 or L3 and move to appropriate leg. If voltage is not acceptable, install a 1/4 KVA step-down transformer.

NOTE: *Grounded B and some open delta power supplies will require this transformer kit.*

Final Check

Check to make sure all safety guards are in place and not damaged. Replace damaged parts.

Check to make sure all decals are visible and not damaged. Replace damaged decals.

Check to make sure all control boxes are closed and no wiring is exposed.

Test Run

When the fan is completely installed, the unit will need to be checked for proper rotation. Provide power to the fan controls and start the fan momentarily. Make sure that the fan wheel rotation is in the direction that the decal on the fan housing illustrates. If the decal is missing, note that the wheel should operate counterclockwise when viewed through the inlet guard on standard construction fans. If the wheel is rotating the wrong direction, have the electrician correct the wiring.

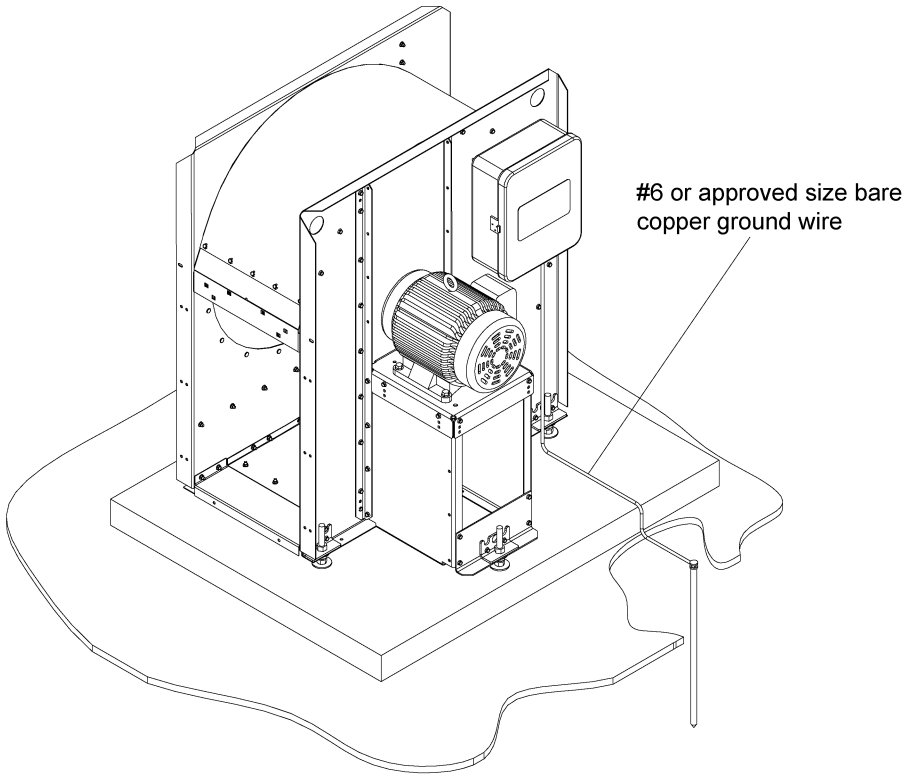

Use a #6 or approved size bare copper ground wire. Install a 5/8" diameter 8' long copper-clad ground rod, 2' away from the foundation and 1' below the surface of the ground or in accordance with local requirements.

Figure 3A

Machine to Earth Ground

It is very important that a machine to earth ground rod be installed at the fan. This is true even if there is a ground at the pole 15' away. This ground needs to be as close to the fan as possible, but no more than 8' away. The ground rod should be connected to the fan control panel with at least a #6 solid bare copper ground wire, or in accordance with local requirements. The machine to earth ground provides additional safety if there is a short. It also provides the grounding necessary for long life and operation of the solid state circuit boards used on control circuits and the electronic ignition systems.

Previously Installed Units

It is recommended that previously installed units be checked to see that a machine to earth ground has been installed by an electrician.

Ground Rod Installation

Proper Installation of the Ground Rod

(Ground rods and wires are not supplied.) It is recommended that the rod not be driven into dry ground. The following steps ensure proper ground rod installation:

1. Dig a hole large enough to hold 1 to 2 gallons of water.
2. Fill hole with water.
3. Insert rod through water and jab it into the ground.
4. Continue jabbing the rod up and down, the water will work its way down the hole, making it possible to work the rod completely into the ground. This method of installing the rod gives a good conductive bond with the surrounding soil.
5. Connect the bare copper ground wire to the rod with the proper ground rod clamp.
6. Connect the bare ground wire to the fan control boxes with a grounding lug.
7. Ground wire must not have any breaks or splices. Insulated wire is not recommended for grounding.

Dig a hole large enough to hold 1 or 2 gallons of water.

Work the ground rod into the earth until it is completely in the ground.

Figure 3B

1750 RPM Fan Electrical Specifications

Fan Horsepower	3				5				7-1/2				10			
Phase	1	3			1	3			1	3			1	3		
Volts	230	230	460	575	230	230	460	575	230	230	460	575	230	230	460	575
Full Load Current (Amps) *	17	9.6	4.8	3.9	28	15.2	7.6	6.1	40	22	11	9	50	28	14	11
Minimum Wire Size	Copper Wire				Copper Wire				Copper Wire				Copper Wire			
50' Run	12	14	14	14	10	14	14	14	8	10	14	14	6	10	14	14
100' Run	12	14	14	14	8	12	14	14	8	10	14	14	6	10	14	14
200' Run	8	12	14	14	6	10	14	14	4	8	14	14	4	6	12	14
300' Run	6	10	14	14	4	8	14	14	3	6	12	14	2	4	10	12
Minimum Wire Size	Aluminum Wire				Aluminum Wire				Aluminum Wire				Aluminum Wire			
50' Run	10	12	12	12	8	12	12	12	6	10	12	12	4	8	12	12
100' Run	8	12	12	12	6	10	12	12	6	8	12	12	4	8	12	12
200' Run	6	10	12	12	4	8	12	12	3	6	12	12	2	4	10	12
300' Run	4	8	12	12	3	6	12	12	1	4	10	12	0	3	8	10
Fuse Size (Slow Blow)	30	15	8	6	50	25	12	10	70	40	20	15	90	45	25	20
Breaker Size	50	15	15	15	70	30	15	15	100	40	20	15	125	50	30	20

* Based on NEC Tables 430-148 and 430-150

Fan Horsepower	15				20			25			30			40			50		
Phase	1	3			3			3			3			3			3		
Volts	230	230	460	575	230	460	575	230	460	575	230	460	575	230	460	575	230	460	575
Full Load Current (Amps) *	65	42	21	17	54	27	22	68	34	27	80	40	32	104	52	41	130	65	52
Minimum Wire Size	Copper Wire				Copper Wire			Copper Wire			Copper Wire			Copper Wire			Copper Wire		
50' Run	4	6	10	12	4	10	10	4	8	10	3	8	8	1	6	6	00	4	6
100' Run	4	6	10	12	4	10	10	4	8	10	3	8	8	1	6	6	00	4	6
200' Run	3	4	10	12	4	10	10	3	8	10	3	8	8	1	6	6	00	4	6
300' Run	1	4	10	10	3	8	10	2	6	8	1	6	8	0	6	6	00	4	6
Minimum Wire Size	Aluminum Wire				Aluminum Wire			Aluminum Wire			Aluminum Wire			Aluminum Wire			Aluminum Wire		
50' Run	2	4	10	10	3	8	10	2	6	8	1	6	8	00	4	4	0000	2	4
100' Run	2	4	10	10	3	8	10	2	6	8	1	6	8	00	4	4	0000	2	4
200' Run	1	3	8	10	2	8	10	1	6	8	0	6	8	00	4	4	0000	2	4
300' Run	00	1	6	8	0	6	8	00	4	6	00	4	6	000	4	4	0000	2	4
Fuse Size (Slow Blow)	125	70	40	30	90	45	40	110	60	45	125	60	50	175	80	70	200	100	80
Breaker Size	175	70	40	30	90	50	40	110	60	50	125	60	50	175	80	70	200	100	80

* Based on NEC Tables 430-148 and 430-150

IMPORTANT: *The values listed in this chart are recommendations only. Electrical installation must be performed by a qualified electrician, in accordance with National and Local Electrical Codes. Any violation of electrical wiring codes could jeopardize the warranty.*

3500 RPM Fan Electrical Specifications

Fan Horsepower	3				5				7-1/2				10			
Phase	1	3			1	3			1	3			1	3		
Volts	230	230	460	575	230	230	460	575	230	230	460	575	230	230	460	575
Full Load Current (Amps) *	17	9.6	4.8	3.9	28	15.2	7.6	6.1	40	22	11	9	50	28	14	11
Minimum Wire Size	Copper Wire				Copper Wire				Copper Wire				Copper Wire			
50' Run	12	14	14	14	10	14	14	14	8	10	14	14	6	10	14	14
100' Run	12	14	14	14	8	12	14	14	8	10	14	14	6	10	14	14
200' Run	8	12	14	14	6	10	14	14	4	8	14	14	4	6	12	14
300' Run	6	10	14	14	4	8	14	14	3	6	12	14	2	4	10	12
Minimum Wire Size	Aluminum Wire				Aluminum Wire				Aluminum Wire				Aluminum Wire			
50' Run	10	12	12	12	8	12	12	12	6	10	12	12	4	8	12	12
100' Run	8	12	12	12	6	10	12	12	6	8	12	12	4	8	12	12
200' Run	6	10	12	12	4	8	12	12	3	6	12	12	2	4	10	12
300' Run	4	8	12	12	3	6	12	12	1	4	10	12	0	3	8	10
Fuse Size (Slow Blow)	30	15	8	6	50	25	12	10	70	40	20	15	90	45	25	20
Breaker Size	50	15	15	15	70	30	15	15	100	40	20	15	125	50	30	20

* Based on NEC Tables 430-148 and 430-150

Fan Horsepower	15			20			30			40			50		
Phase	3			3			3			3			3		
Volts	230	460	575	230	460	575	230	460	575	230	460	575	230	460	575
Full Load Current (Amps) *	42	21	17	54	27	22	80	40	32	104	52	41	130	65	52
Minimum Wire Size	Copper Wire			Copper Wire			Copper Wire			Copper Wire			Copper Wire		
50' Run	6	10	12	4	10	10	3	8	8	1	6	6	00	4	6
100' Run	6	10	12	4	10	10	3	8	8	1	6	6	00	4	6
200' Run	4	10	12	4	10	10	3	8	8	1	6	6	00	4	6
300' Run	4	10	10	3	8	10	1	6	8	0	6	6	00	4	6
Minimum Wire Size	Aluminum Wire			Aluminum Wire			Aluminum Wire			Aluminum Wire			Aluminum Wire		
50' Run	4	10	10	3	8	10	1	6	8	00	4	4	0000	2	4
100' Run	4	10	10	3	8	10	1	6	8	00	4	4	0000	2	4
200' Run	3	8	10	2	8	10	0	6	8	00	4	4	0000	2	4
300' Run	1	6	8	0	6	8	00	4	6	000	4	4	0000	2	4
Fuse Size (Slow Blow)	70	40	30	90	45	40	125	60	50	175	80	70	200	100	80
Breaker Size	70	40	30	90	50	40	125	60	50	175	80	70	200	100	80

* Based on NEC Tables 430-148 and 430-150

IMPORTANT: *The values listed in this chart are recommendations only. Electrical installation must be performed by a qualified electrician, in accordance with National and Local Electrical Codes. Any violation of electrical wiring codes could jeopardize the warranty.*

Fan Dimensions

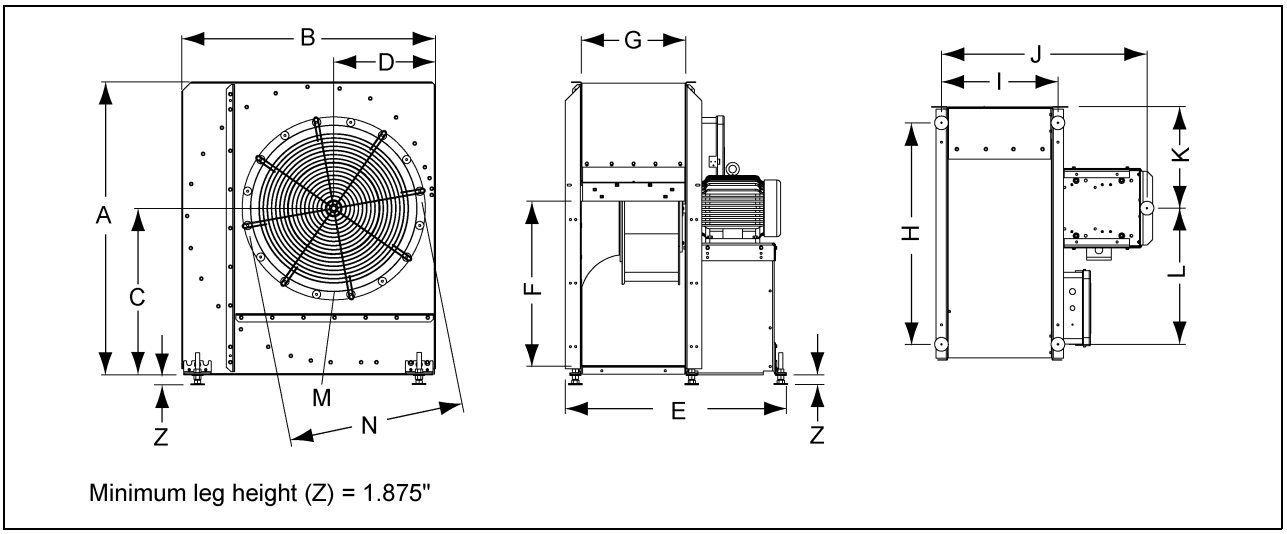

Figure 4A

1750 RPM Fan Housing Dimensions

Fan	A	B	C	D	E	F	G	H	I	J	K	L	M	N
CF-3	44	37.875	25.094	15.313	30.813	23.593	13.5	32.094	15.688	28.813	15.313	19.656	24.875	26.125
CF-5	48.563	42	27.719	17.063	34.688	27.25	14.25	36.125	16.438	32.563	17.063	21.968	27.375	29.125
CF-7.5	48.563	42	27.719	17.063	38.438	27.25	18	36.125	20.188	36.313	17.063	21.968	27.375	29.125
CF-10	53	45.938	30.125	18.406	38.625	29.875	17.438	40.094	19.781	35.844	18.406	24.656	30	31.75
CF-15	53	45.938	30.125	18.406	40.063	29.875	18.875	40.094	21.219	37.281	18.406	24.656	30	31.75
CF-20	58.906	50.563	33.34	20.094	45.438	33.25	19.563	44.438	21.813	42.906	20.094	27.281	33.625	35.125
CF-25	58.906	50.563	33.34	20.094	47.75	33.25	21.875	44.438	24.063	45.125	20.094	27.281	33.625	35.125
CF-30	64.406	55.75	36.219	22.25	47.688	33.25	21.875	49.844	24.125	45.25	22.313	30.532	36.5	38.375
CF-40	64.406	55.75	36.219	22.25	49.5	33.25	23.688	49.844	25.938	47.063	22.313	30.532	36.5	38.375
CF-50	64.406	55.75	36.219	22.25	50.625	33.25	25.25	49.844	27.5	48.625	22.313	30.532	36.5	38.375
CF-30D - CF-50D	56.498	51.756	32.938	22.688	90.625	33.25	44	42.5	46.532	89.563	22.688	25.089	33.5	35.125

3500 RPM Fan Housing Dimensions

Fan	A	B	C	D	E	F	G	H	I	J	K	L	M	N
CHS-3	30.031	29.813	17.375	12.813	27.188	16.5	8.125	24.156	10.281	25.375	12.813	14.156	16.5	17.875
CHS-5	30.031	29.813	17.375	12.813	28.969	16.5	10	24.156	12.156	27.25	12.813	14.156	16.5	17.875
CHS-7.5	36.375	33.375	20.875	13.281	29.938	19	10	27.688	12.219	28.219	13.281	17.219	20.5	21.75
CHS-10	36.375	33.375	20.875	13.281	30.938	19	11	27.688	13.219	29.219	13.281	17.219	20.5	21.75
CHS-15	36.375	33.375	20.875	13.281	32.938	19	13	27.688	15.219	31.219	13.281	17.219	20.5	21.75
CHS-20	44	37.875	25.094	15.313	37.813	23.563	12.563	32.094	14.75	35.813	15.313	19.656	24.875	26.125
CHS-30	44	37.875	25.094	15.313	39.313	23.563	14.063	32.094	16.25	37.313	15.313	19.656	24.875	26.125
CHS-40	44	37.875	25.094	15.313	41.75	23.563	16.5	32.094	18.688	39.75	15.313	19.656	24.875	26.125
CHS-50	48.563	42	27.719	17.063	41.125	27.25	15.75	36.125	17.938	39	17.063	21.968	27.375	29.125

NOTE: *All dimensions in inches to nearest 1/32".*

NOTE: *Add 8.125" to 'A' dimension for 3500 RPM fans with control boxes.*

Discharge Bolt Pattern Dimensions

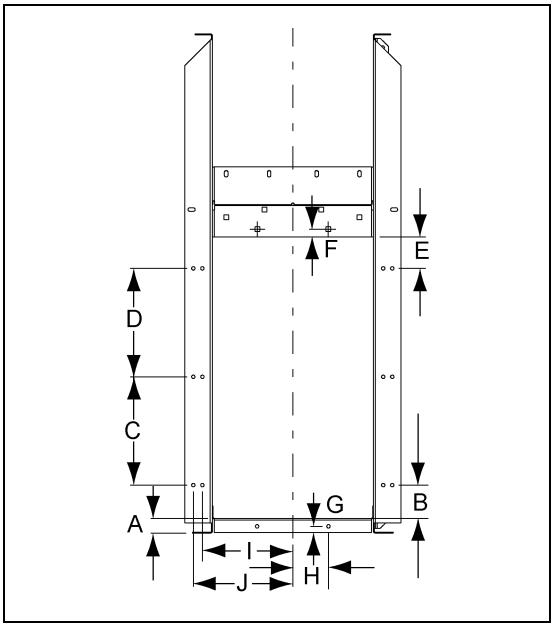

Figure 4B

1750 RPM Discharge Dimensions

Fan	A	B	C	D	E	F	G	H	I	J
CF-3	1.531	4.688	5.906	5.906	7.094	1.094	0.875	2.406	7.844	***
CF-5	1.813	5.125	8.438	8.438	5.218	0.875	0.75	2.75	8.031	***
CF-7.5	1.813	5.125	8.438	8.438	5.218	0.875	0.75	3.75	9.906	***
CF-10	1.594	3.5	11.5	11.5	3.344	0.813	0.688	3.75	9.594	10.563
CF-15	1.594	3.5	11.5	11.5	3.344	0.813	0.688	5.75	10.313	11.281
CF-20	1.656	8.156	8.469	8.469	8.188	0.75	0.75	5.75	10.5	11.656
CF-25	1.656	8.156	8.469	8.469	8.188	0.75	0.75	5.75	11.656	12.813
CF-30	1.281	8.188	8.438	8.438	8.156	0.75	0.75	5.75	11.656	***
CF-40	1.281	8.188	8.438	8.438	8.156	0.75	0.75	5.75	12.563	***
CF-50	1.281	8.188	8.438	8.438	8.156	0.75	0.75	5.75	13.344	***
CF-30D - CF-50D	1.313	8.031	8.438	8.438	8.219	0.656	0.813	3.0 *	22.906	***

* 4 Holes @ 6" Spacing

3500 RPM Discharge Dimensions

Fan	A	B	C	D	E	F	G	H	I	J
CHS-3	1.625	4.313	4.125	4.125	4.063	1	0.781	2	5.125	***
CHS-5	1.625	4.313	4.125	4.125	4.063	1	0.781	2	6.094	***
CHS-7.5	1.625	3.531	4.75	4.75	6	1.094	0.875	2	6.094	***
CHS-10	1.625	3.531	4.75	4.75	6	1.094	0.875	2	6.094	***
CHS-15	1.625	3.531	4.75	4.75	6	1.094	0.875	2	6.094	***
CHS-20	1.531	4.688	5.906	5.906	7.094	1.094	0.875	2.406	7.375	***
CHS-30	1.531	4.688	5.906	5.906	7.094	1.094	0.875	2.781	8.125	***
CHS-40	1.531	4.688	5.906	5.906	7.094	1.094	0.875	3.063	9.344	***
CHS-50	1.813	5.125	8.438	8.438	5.219	0.875	0.75	3.063	8.781	***

NOTE: *All dimensions in inches to nearest 1/32".*

Inlet Cone Dimensions

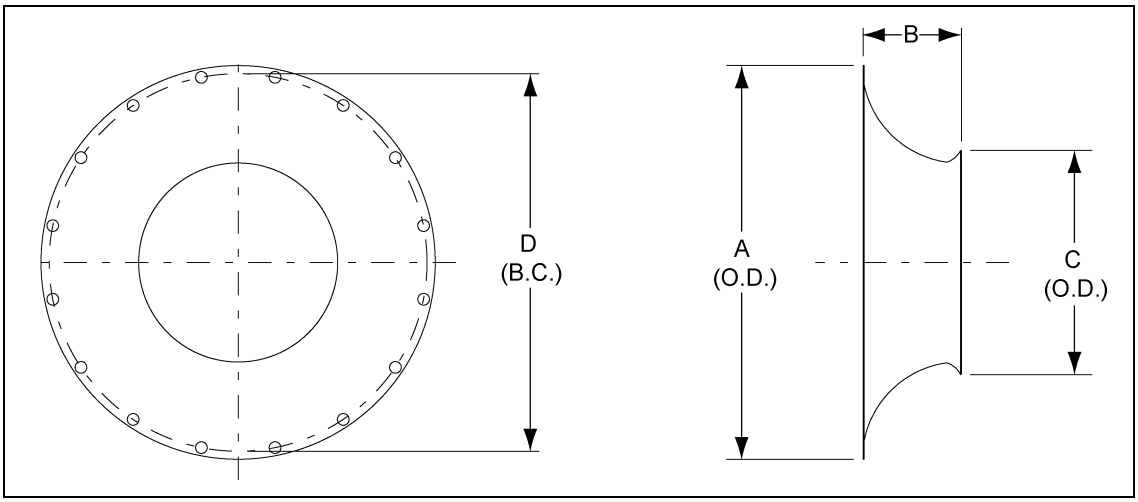

Figure 4C

Size	Painted Part #	A	B	C	D	Hole Size	# of Holes
15	C-7743	18.625	4.000	10.375	9.875	0.688	8
18	C-7745	22.750	5.388	12.625	21.750	0.875	16
22	C-7747	27.125	6.750	15.625	26.125	0.875	16
24	C-7749	30.500	7.250	17.000	29.125	1.000	16
27	C-7751	33.125	8.000	18.813	31.750	1.000	16
30	C-7753	36.500	9.000	21.125	35.125	1.000	16
33	C-7754	38.750	10.000	23.063	38.376	1.000	16

Add suffix to painted part # for correct color. “-Y” = YELLOW, “-R” = RED, “-O” = ORANGE

Inlet Cone to Wheel Clearances

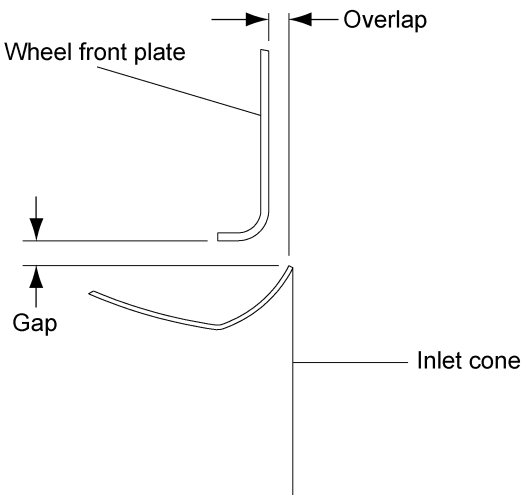

Gap
The “Gap” between the cone and wheel should be equal distance all around the cone’s inner edge.

Overlap
The “Overlap” of the wheel over the cone should be a minimum distance to allow free rotation without interference.

Figure 4D

Fan Wheel Dimensions

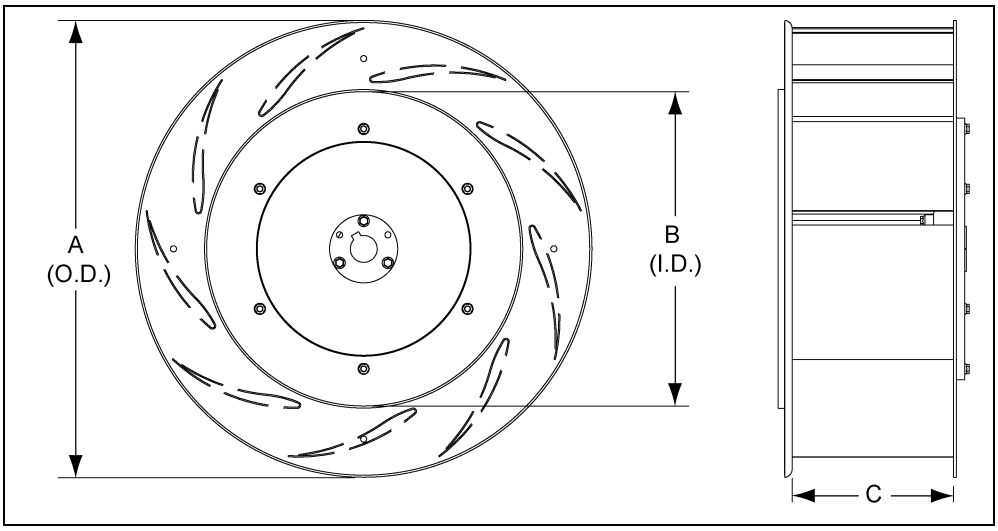

Figure 4E

Fan Model	Wheel Assembly Part # *	Size	A	B	C
1750 RPM Fans					
CF-3	CH-6878	22	23.000	15.875	4.956
CF-5	C-956	24	25.250	17.188	5.938
CF-7.5	C-957	24	25.250	17.188	8.875
CF-10	C-8533	27	27.625	19.000	8.375
CF-15	C-960	27	27.625	19.000	9.750
CF-20	CH-2076	30	30.625	21.313	9.625
CF-25	C-2046	30	30.625	21.313	10.750
CF-30	C-7319	33	33.156	23.428	9.000
CF-40	C-7320	33	33.156	23.428	11.625
CF-50	C-8517	33	33.156	23.428	13.500
3500 RPM Fans					
CHS-3	FH-5464	15	15.500	10.625	2.875
CHS-5	FH-5465	15	15.500	10.625	4.750
CHS-7.5	FH-5466	18	18.750	12.750	3.000
CHS-10	FH-5467	18	18.750	12.750	4.000
CHS-15	FH-5468	18	18.750	12.750	6.000
CHS-20	FH-5469	22	23.000	15.875	3.938
CHS-30	FH-5470	22	23.000	15.875	5.938
CHS-40	FH-5758	22	23.000	15.875	7.875
CHS-50	FH-5852	24	25.250	17.188	6.938

**** Wheel Assembly is Blade and Bushing***

Fan Pad Location

Fan pad should be perpendicular to bin wall. Fan discharge centerline should lie on bin centerline. Recommended thickness for pad is 4" minimum. Top surface of pad should be 2" below bin foundation. Fans with downwind heaters require fan pad to be 48" wide and add 33" onto length (D).

IMPORTANT: *Fan pad and fan must be level and smooth for proper operation. Vibration problems can result from improper fan leveling.*

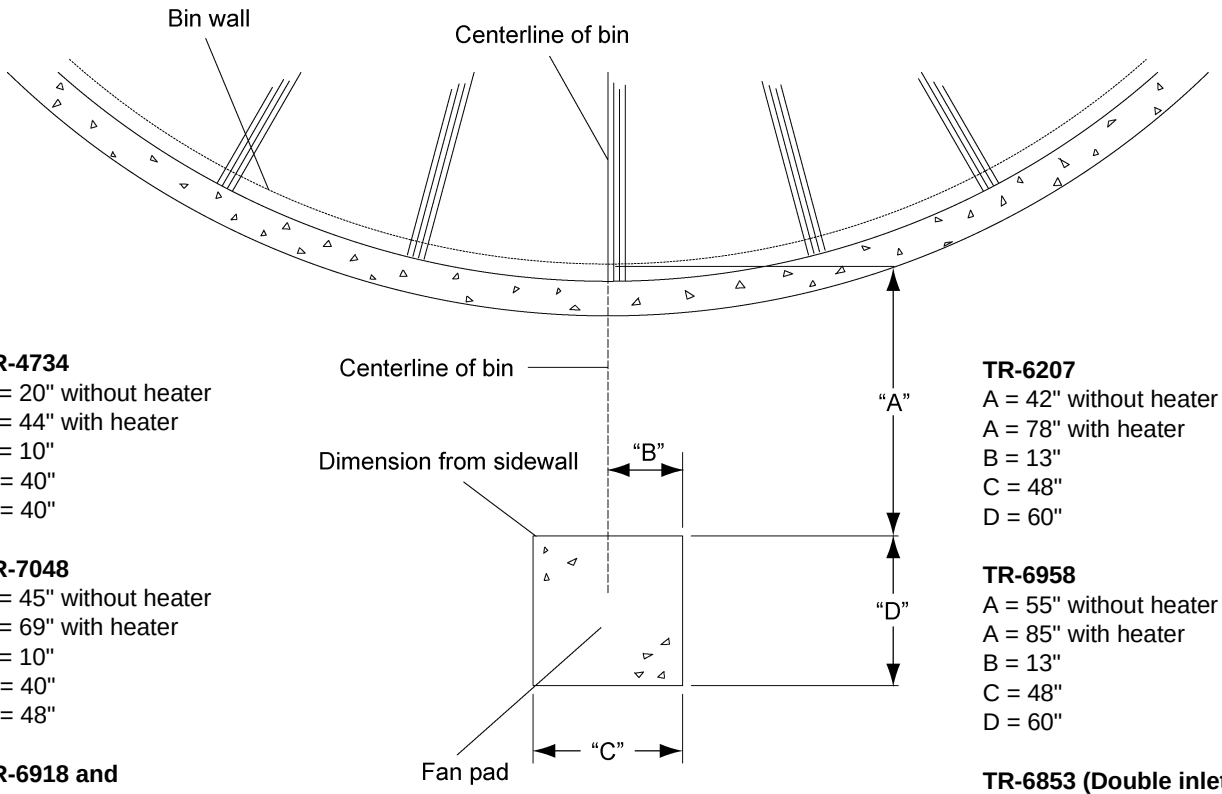

TR-4734
A = 20" without heater
A = 44" with heater
B = 10"
C = 40"
D = 40"

TR-7048
A = 45" without heater
A = 69" with heater
B = 10"
C = 40"
D = 48"

TR-6918 and TR-6919
A = 32" without heater
A = 65" with heater
B = 13"
C = 48"
D = 52"

TR-7049
A = 45" without heater
A = 78" with heater
B = 13"
C = 48"
D = 52"

TR-6207
A = 42" without heater
A = 78" with heater
B = 13"
C = 48"
D = 60"

TR-6958
A = 55" without heater
A = 85" with heater
B = 13"
C = 48"
D = 60"

TR-6853 (Double inlet)
A = 54" without heater
A = 88" with heater
B = 28"
C = 100"
D = 60"

TR-4013
A = 36" without heater
B = 13"
C = 48"
D = 60"

TR-6944
A = 48" without heater
B = 13"
C = 48"
D = 60"

Front of pad should be perpendicular to bin wall. Recommended thickness for fan pad is 4" minimum. Surface of pad should be 2" below the bin foundation. Pad for heater not required.

Figure 4F

After initial installation and also prior to using the unit each season, check the operation to ensure proper functioning, adjustment and reliability.

Fan Start-Up

1. Make certain the unit is properly installed and connected, as described within the installation section *on Page 16* of this manual. All air passage joints and seams must be well sealed.
2. With main power supply turned OFF, rotate the wheel by hand to make certain it turns freely without contacting the housing or inlet cone.
3. Open roof doors to allow airflow at all times when fan is operating.

   NOTE: *Refer to roof damage disclaimer in the safety section on Page 15 of this manual.*
4. Turn ON main power disconnect switch.

Make certain all guards and covers are securely in place.

5. Press the fan START button and check the following:
   a. Check direction of wheel rotation. Correct if needed by following the instructions on the motor.
   b. Check to make sure the wheel comes to full operating speed in less than 10 seconds. If there is any doubt as to proper operation, check the current draw of the motor. The motor amperage should not exceed the maximum full load amps listed on the motor nameplate.

Fan Shut Down

1. Press the fan STOP button on units equipped with motor controls.
2. Shut off electrical power at main and at disconnect.
3. Close the roof openings and cover fan inlet to prevent harmful back-draft air currents from passing through the grain and to avoid grain infestation from rodents and insects.

Maintaining Grain Quality

To properly maintain the quality of stored grain, it is necessary to keep the grain dry, cool and insect free. Any one of these problems can contribute to spoilage. Wet, warm grain promotes insect growth as well as grain spoilage. Cool, dry grain can keep for long periods of time.

It is recommended that the grain be kept cool (avoid freezing as freezing can reduce quality). Grain should be cooled through the fall and winter, warmed in the spring and summer.

IMPORTANT: *Conditions and requirements may vary from area to area. Contact the local agriculture extension office or State Agricultural University for more exact guidelines.*

Grain Storage

Average grain temperature should be above 35°F in the winter and below 65°F in the summer. Always try to keep the grain within 10°F-15°F of the average monthly outside temperature. This means grain may need to be aerated on warm days during the winter to stay above 35°F when freezing temperatures are predominate. During the summer it may be necessary to aerate the grain on cool nights, so the 65°F temperature is not exceeded during the hot days of summer.

If the grain is to be stored more than 1 year, it has to be recooled the following fall and winter, repeating the process as long as the grain is in storage. **Frequent and regular inspection (at least weekly during fall and spring) is the best prevention against grain spoilage.**

Important Information Regarding Fuse Replacement

This product employs overload protection (fuse). A blown fuse indicates an overload or short circuit situation. If the fuse blows, disconnect all power to the product. Replace the fuse as per the user servicing instructions (follow product marking for proper fuse rating) and check the product. If the replacement fuse blows, a short circuit may be present and the user should discontinue use of the product until customer service can be contacted for further assistance.

Fan Wheel Removal and Installation

Always disconnect and lock out power before working on or around fan.

The fan wheel is secured to the motor shaft by the use of a taper-lock bushing, motor shaft key and cap screws. The size, quantity and torque of cap screws required will depend on the model of the fan.

Although the taper-lock method of retaining the wheel onto the motor shaft is very simple and obvious, it is essential that the following points be read carefully and fully understood, as improper installation can result in serious or fatal injury caused by a loose, fast flying wheel.

THREADED BUSHING HOLES: The threaded holes within the bushing are provided for disassembly purposes only. Do not attempt to use these holes for re-assembly, as they will not allow the parts to become locked onto the shaft, thereby causing an extremely hazardous operating condition.

CLEARANCE HOLES: When re-assembling parts, the cap screws must be installed through the UNTAPPED CLEARANCE HOLES to cause the wheel to be pulled forward onto the tapered bushing, thus locking the parts securely onto the motor shaft. Refer to Page 32 (under installation section) for assembly details.

Removing the Fan Wheel Assembly

1. Lock out and tagout the main power to make sure the dryer cannot be started during servicing.
2. Remove the inlet cone and grill guard.
3. If there is a safety washer present, remove the bolt, lock washer and safety washer.
4. Remove the bolts from the unthreaded holes of the bushing. Do not use these bolts for bushing removal.
5. Using an allen wrench, undo the set screw (if present) and remove the key from the keyway.
6. Install grade 5 or stronger bolts into the threaded holes in the bushing and gradually apply torque to each bolt to loosen the bushing.
7. Remove the bushing and fan wheel assembly.

Installing the Fan Wheel Assembly

1. Clean the motor shaft, key, bushing and the bore of the hub with a non-residual cleaner, such as brake parts cleaner or electric parts cleaner. It is important that these mating surfaces be clean and dry and no grease or oil is present. The parts must be assembled dry for maximum friction.

Do not use any lubricant or thread locking compound during installation. The use of such products will cause improper bolt torque and will crack the fan hub.

2. Insert bolts into bushing holes and ensure the shoulder portion of the bolt is NOT protruding the hole.
3. Install the fan wheel assembly onto the motor shaft.
4. Align the keyway in the bushing with the key and slide the bushing onto the motor shaft.

   NOTE: *Do not use excessive force to drive the bushing onto the shaft.*

5. Align bushing and hub keyways with the key. Bushing should be flush with the end of the motor shaft.
6. Loosely install the bolts through the unthreaded holes in the bushing into the threaded holes of the hub.
7. Find the applicable torque for the bushing in the chart *on Page 31*. The bushing type is etched into the face of the bushing.
8. Torque the bushing gradually to evenly seat it inside the hub and onto the motor shaft. Set the torque wrench to 1/3 of the required torque setting and tighten each bolt in a circular pattern three (3) times. Increase the torque setting on the wrench to 2/3 of the required torque and tighten each bolt in a circular pattern three (3) times. Increase the setting on the torque wrench to the final required torque setting and tighten each bolt in a circular pattern three (3) times.
9. If there is a safety washer present, install the washer, lock washer and bolt.
10. Turn the fan wheel assembly by hand to make sure there is freedom of movement and uniform clearance around the inlet.
11. Install the inlet cone and grill guard.
12. Turn ON the main power source and operate the fan for 30 minutes.
13. Stop the fan and lock out and tagout the main power to make sure the dryer cannot be started during servicing.
14. Remove the grill guard and re-tighten the bolts in a circular pattern one time at the final required torque setting.
15. Install the grill guard and turn ON the main power source.

Installing the Fan Wheel Assembly (Continued)

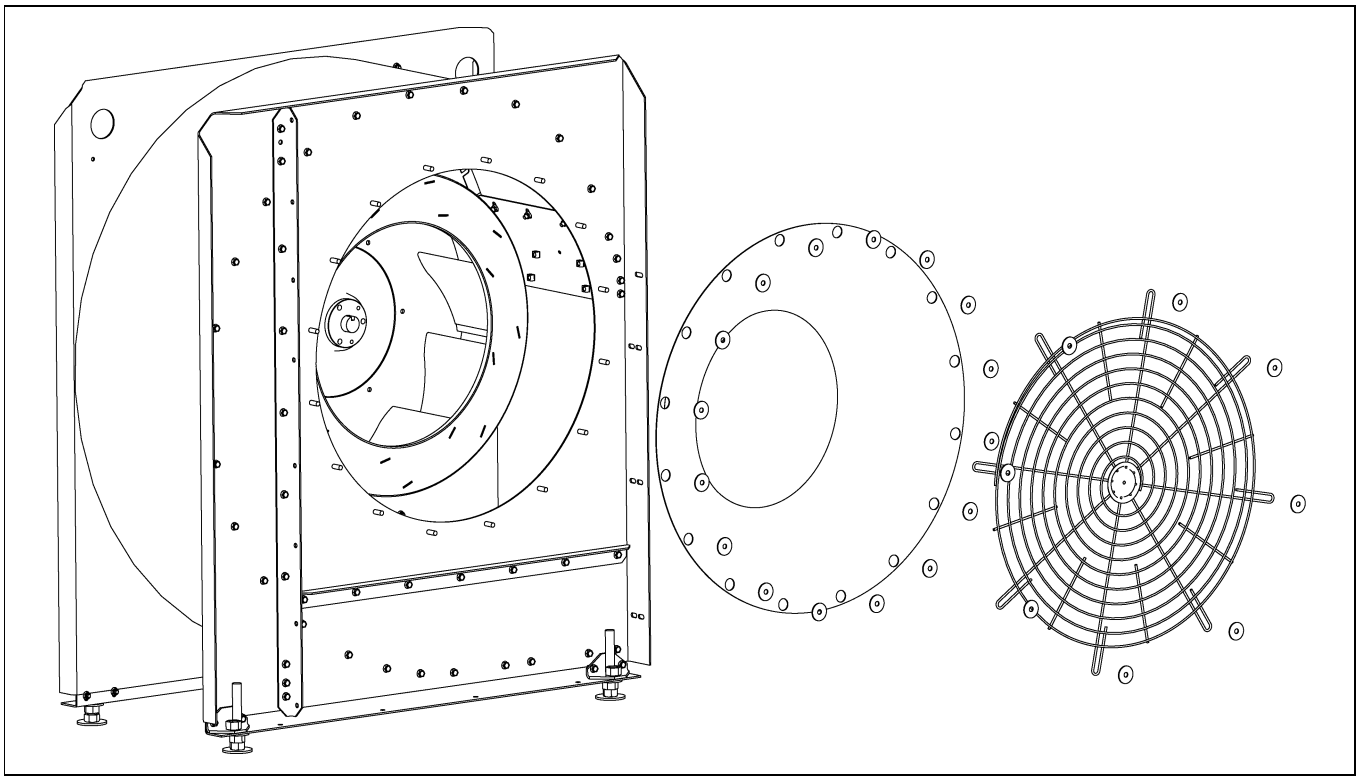

Figure 6A *Centrifugal Fan*

CAUTION

Do not exceed the torque specifications listed on the bushing bolt torque chart. Exceeding the recommended torque will crack the fan hub.

Bushing	Bolt Thread	Bolt Torque Foot - Pounds
JA	10-24	5
G	1/4"-20	6
H	1/4"-20	6
SH	1/4"-20	8
SD	1/4"-20	9
SDS	1/4"-20	9

Bushing	Bolt Thread	Bolt Torque Foot - Pounds
P-1	5/16"-18	13
SK	5/16"-18	15
SF	3/8"-16	23
Q-1	3/8"-16	29
R-1	3/8"-16	29

Installing the Fan Wheel Assembly (Continued)

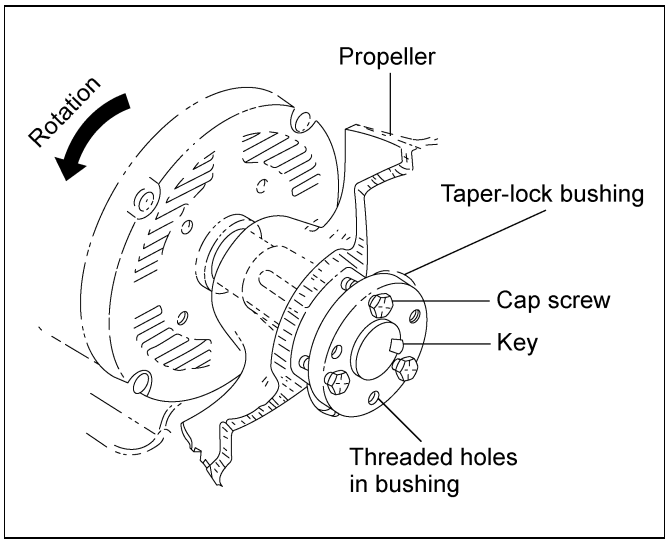

Figure 6B *Cutaway Drawing of Typical Propeller Installation*

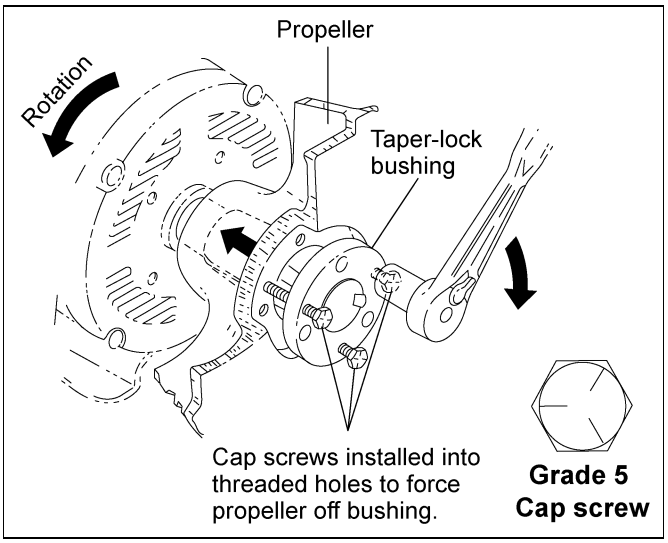

Figure 6C *Cap Screw Arrangement for Disassembly*

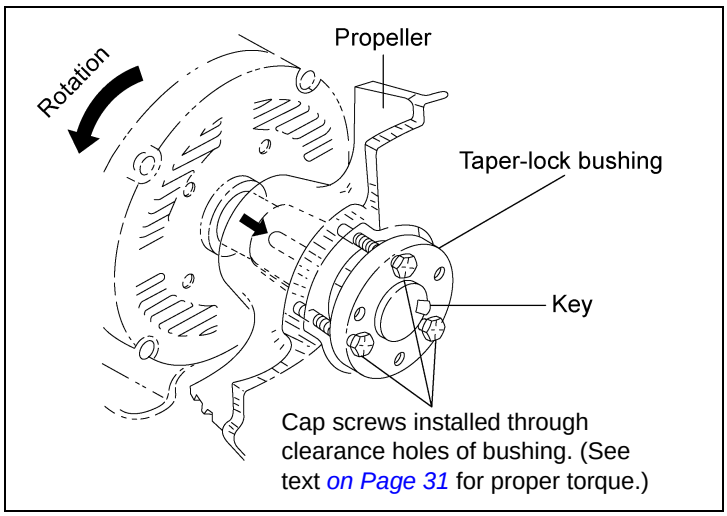

Figure 6D *Cap Screw Arrangement for Resassembly*

Fan Wheel Inspection and Maintenance

Pre-season inspections should be done on the fan wheel to look for the following.

1. Any debris (stalks, bees wings, mud, insects and insect nests) accumulated on the surfaces of the fan wheel. Remove these items as they will likely disrupt airflow over the fan airfoils and can potentially cause vibration problems.
2. Inspect the fan wheel for any broken, cracked, or loose parts. Blade should NOT be operated with broken or loose parts. Contact dealer for determination of the repairs required.

WARNING ***Do not attempt to pull the flange of the bushing flush with the wheel hub. A clearance of 1/8" to 1/4" must be maintained between bushing flange and wheel hub surface. Wheel will loosen and cause damage or injury.***

Taper-Lock Bushing Torque Requirements

Browning Taper-Lock Bushing Bolt Tightening Torque

Bushing Size	Hex Bolt Size	Torque (inch-lbs)
P	5/16"-18 x 1-1/4"	192
Q	3/8"-16 x 1-1/2"	348

Fan Motor Removal and Installation

In the event of motor failure, remove the motor, as described and take it to the nearest authorized service station. AUTHORIZED SERVICE STATIONS ARE THE ONLY PLACES THAT CAN PROVIDE MOTOR WARRANTY. Motor service and repair at other places will be at owner's expense. If service station determines motor failure to be caused by faulty material or workmanship, repair will be under warranty when within the warranty period. Motor failure because of external causes will result in a charge to the owner for repair.

1. LOCK OUT THE MAIN POWER SUPPLY, then remove fan guard, inlet cone and wheel as outlined earlier.
2. Open motor junction box cover and disconnect the motor lead wires from within the box.

   NOTE: *Tag, or otherwise identify wires for ease of reassembly.*
3. Remove motor mount bolts. If there are any shims between the motor and its base, note their locations so they can be properly installed during reassembly.
4. Disconnect the motor end of the motor conduit, if required, then carefully pull conduit and wires through hole in the motor junction box. Remove motor. If motor requires service, take it to an authorized service station.
5. To reinstall motor, slide onto motor base plate and replace shims (if required) between motor and base plate. Reinstall motor mount bolts and washers and fully tighten them at this time. Reinstall conduit and wires and carefully remake all electrical wiring connections.

   NOTE: *Make sure to install and tighten the wheel in accordance with earlier instructions.*

General Inspection

Inspect the motor at regular intervals, approximately every 500 hours of operation or every 3 months, whichever occurs first. Keep the motor clean and the ventilation openings clear. The following steps should be performed at each inspection:

Do not touch electrical connections before you first ensure that power has been disconnected. Electrical shock can cause serious or fatal injury. Only qualified personnel should attempt the installation, operation and maintenance of this equipment.

1. Check that the motor is clean. Check that the interior and exterior of the motor is free of dirt, oil, grease, water, etc. Oily vapor, paper pulp, textile lint, etc., can accumulate and block motor ventilation. If the motor is not properly ventilated, over heating can occur and cause early motor failure.
2. Check all electrical connectors to be sure that they are tight.

Lubrication and Bearings

Bearing grease will lose its lubricating ability over time, not suddenly. The lubricating ability of a grease (over time) depends primarily on the type of grease, the size of the bearing, the speed at which the bearing operates and the severity of the operating conditions. Good results can be obtained if the following recommendations are used in the maintenance program. Type of grease: A high grade ball or roller bearing grease should be used.

Recommended grease for standard service conditions:

Polyrex EM (Exxon Mobile)

Equivalent and compatible greases include:

Texaco Polystar

Rykon Premium #2

Pennzoil Pen 2 Lube

Chevron SRI.

Lubrication Procedure

Be sure that the grease you are adding to the motor is compatible with the grease already in the motor.

With Grease Outlet Plug

1. Clean all grease fittings.
2. Remove grease outlet plug.
3. Add the recommended amount of grease.
4. Reinstall grease outlet plug.

Without Grease Outlet Plug

This requires disassembly of the motor. Contact local motor shop for assistance.

To avoid damage to motor bearings, grease must be free of dirt.

Volume of Grease to Relubricate Bearings (Teaspoons)

NEMA Frame Size	Qty
Up to 210 incl.	2
Over 210 to 280 incl.	3.9
Over 280 to 360 incl.	5.2
Over 360 to 449 incl.	13.4

Lubrication Intervals - Ball Bearing Motors

Type of Annual Usage	1800 RPM - NEMA Frame Size			3600 RPM - NEMA Frame Size		
	Up to 280 incl.	Over 280 to 360 incl.	Over 360	Up to 280 incl.	Over 280 to 360 incl.	Over 360
Continuous Normal Duty *	9500 Hrs	7400 Hrs	3500 Hrs	3600 Hrs	2200 Hrs	2200 Hrs
Continuous Severe Duty **	4750 Hrs	3700 Hrs	1750 Hrs	1800 Hrs	1100 Hrs	1100 Hrs
Seasonal Service Motor (Idle 6 Months)	Lube at the **Beginning of Season** and then follow the **Appropriate Duty Interval** above.					

* Clean, Little Corrosion with 40°C maximum temperature.

** Moderate Dirt, Corrosion with 50°C maximum temperature. Average hours per month = 730

Troubleshooting Charts

Fan Troubleshooting Chart

Symptom	Possible Cause	Solution
Fan will not run.	Blown fuse or breaker in disconnect switch.	To replace blown fuse, grasp center of fuse securely and pull carefully outward to remove fuse from fuse holder. RISK OF FIRE. Replace fuse only with equally rated fuse shown on panel label.
	Main power not turned ON.	Turn power ON at all disconnects ahead of the unit.
	Defective wiring or loose connection.	Follow wiring diagram and tighten any loose connections.
	Incorrect wire size.	See wire size charts for proper wire size and change if needed.
	Overload kicked out.	Check manual reset, push in to reset.
	Defective motor.	Replace motor.
	Defective magnetic contactor.	Check the magnetic contactor.
Fan runs for a short period of time then shuts off.	Undersize wiring.	Check to see that power supply wires are the proper size, contact the local power company.
	Low line voltage at the installation.	Call power company after making sure wire size is correct.
	Power failure.	
	Magnetic contactor malfunctioning.	Change magnetic contactor.
	Defective start/stop button.	Replace necessary part.
	Overload setting incorrect.	Adjust overload to proper setting.
Fan makes ticking noise.	Fan blade hitting housing.	Stop fan and turn OFF power. Remove fan guard and check to see if fan blade is hitting the housing. Adjust motor or fan wheel position to obtain proper clearance.
	Motor bearing bad.	Replace motor bearing.
Fan vibrates.	Fan not level.	Level fan.
	Fan has dirt deposits on blade.	Clean blade.
	Motor shaft is bent.	Replace motor.
	Blade not mounted properly on shaft.	Mount blade properly on shaft.
	Blade out of balance.	Replace or have blade rebalanced.

Fan Troubleshooting Flow Chart

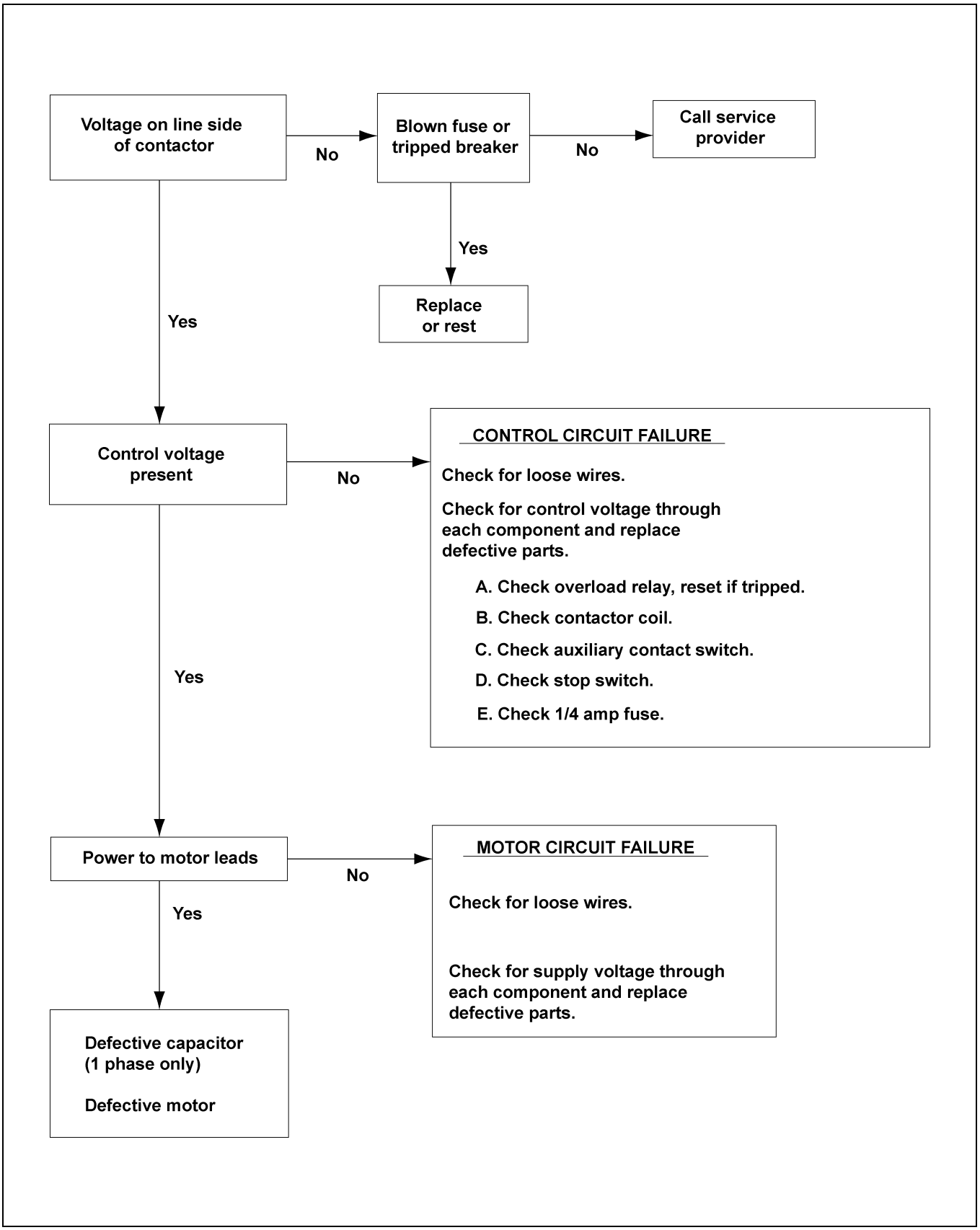

Figure 6E

1. **Main Assembly - 1750 RPM Fans** - *(See Page 38-42.)*

2. **Main Assembly - 3500 RPM Fans** - *(See Page 43-47.)*

3. **Main Assembly - Double Inlet Fan** - *(See Page 48.)*

4. **Internal Bearing Arch Assembly - Double Inlet Fan** - *(See Page 49.)*

5. **Motor Drives - Double Inlet Fan** - *(See Page 50.)*

6. **Shaft Coupling** - *(See Page 51.)*

7. **Small Control Panel 1 Phase 230 Volt (CPS-230-1)** - *(See Page 52-53.)*

8. **Small Control Panel 3 Phase 230 Volt (CPS-230-3)** - *(See Page 54-55.)*

9. **Large Control Panel 3 Phase 230 Volt (CPL-230-3)** - *(See Page 56-57.)*

10. **Small Control Panel 3 Phase 380V, 460V and 575V (CPS-345-3)** - *(See Page 58-59.)*

11. **Large Control Panel 3 Phase 460V and 575V (CPL-345-3)** - *(See Page 60-61.)*

12. **Motor Conduit Assembly** - *(See Page 62-67.)*

Main Assembly - 1750 RPM Fans

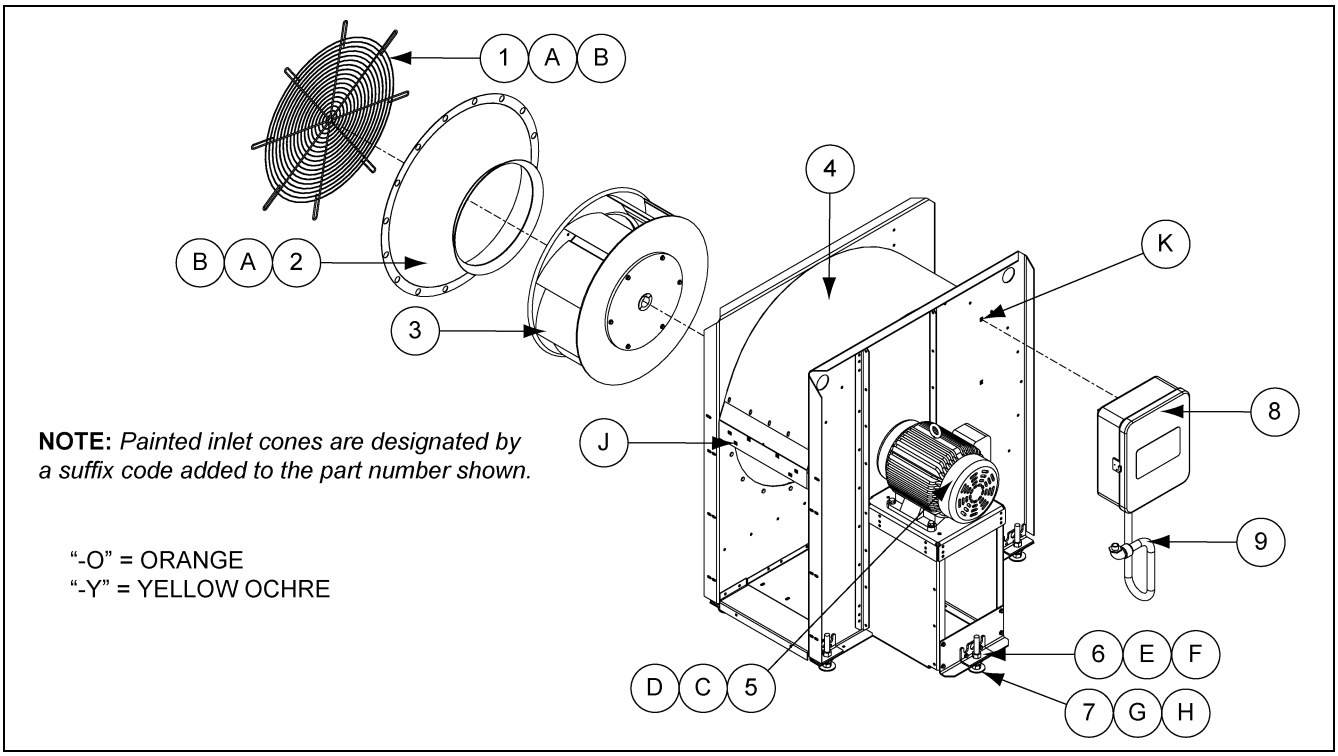

Model: CF-3			
Ref #	Part #	Description	Qty
1	C-7746	Grill Guard	1
2	C-7747	Inlet Cone - Painted	1
3	CH-6878	Blade and Hub Assembly	1
4	C-8136	Housing Assembly	1
5	C-7979	Motor - 1 Phase 230 Volt	1
5	C-7984	Motor - 3 Phase 208-230/460 Volt	1
5	300-3-5	Motor - 3 Phase 575 Volt	1
6	C-8322	Leg Bracket	5
7	C-7519	Leveling Leg	5
8	Reference	Control Box Assembly	1
9	Reference	Conduit Assembly	1
A	S-968	Nut Flange Whiz 3/8"-16 ZN Grade 5	16
B	S-3671	Fender Washer 25/64" x 1-1/2" ZN	24
C	S-9064	Bolt Flange 3/8"-16 x 1-1/2" ZN Grade 5	4
D	S-968	Nut Flange Whiz 3/8"-16 ZN Grade 5	4
E	S-6606	Bolt Flange 5/16"-18 x 3/4" ZN Grade 5	10
F	S-3611	Nut Flange Whiz 5/16"-18 ZN YDP	10
G	S-866	Flat Washer 3/4" USS ZN	5
H	S-234	Hex Nut 3/4"-10 ZN Grade 5	10
J	090-1709-6	Retainer Nut 5/16"-18 x 0.120" ZN	2
K	090-1709-6	Retainer Nut 5/16"-18 x 0.120" ZN	2

Model: CF-5			
Ref #	Part #	Description	Qty
1	C-7748	Grill Guard	1
2	C-7749	Inlet Cone - Painted	1
3	C-956	Blade and Hub Assembly	1
4	C-8114	Housing Assembly	1
5	C-7980	Motor - 1 Phase 230 Volt	1
5	C-7985	Motor - 3 Phase 208-230/460 Volt	1
5	500-3-5	Motor - 3 Phase 575 Volt	1
6	C-8322	Leg Bracket	5
7	C-7519	Leveling Leg	5
8	Reference	Control Box Assembly	1
9	Reference	Conduit Assembly	1
A	S-968	Nut Flange Whiz 3/8"-16 ZN Grade 5	16
B	S-3671	Fender Washer 25/64" x 1-1/2" ZN	24
C	S-9064	Bolt Flange 3/8"-16 x 1-1/2" ZN Grade 5	4
D	S-968	Nut Flange Whiz 3/8"-16 ZN Grade 5	4
E	S-6606	Bolt Flange 5/16"-18 x 3/4" ZN Grade 5	10
F	S-3611	Nut Flange Whiz 5/16"-18 ZN YDP	10
G	S-866	Flat Washer 3/4" USS ZN	5
H	S-234	Hex Nut 3/4"-10 ZN Grade 5	10
J	090-1709-6	Retainer Nut 5/16"-18 x 0.120" ZN	2
K	090-1709-6	Retainer Nut 5/16"-18 x 0.120" ZN	2

Main Assembly - 1750 RPM Fans (Continued)

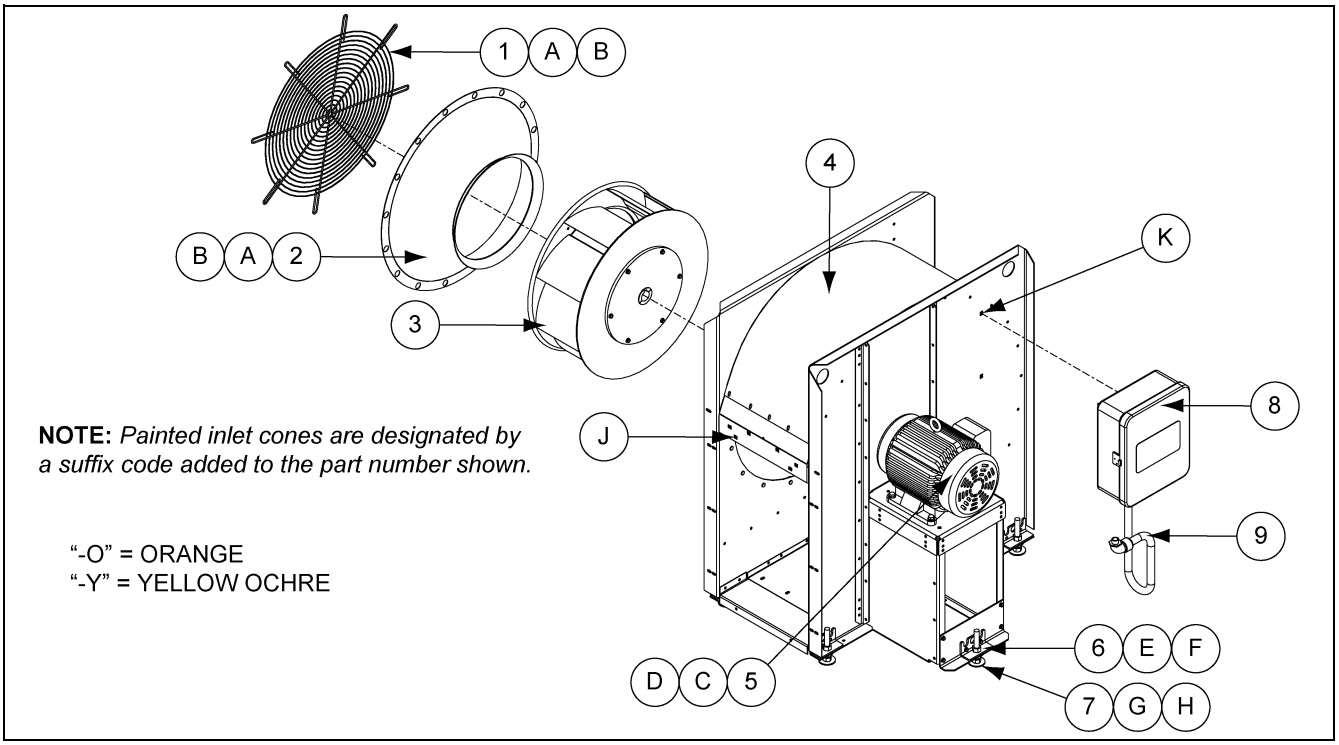

NOTE: *Painted inlet cones are designated by a suffix code added to the part number shown.*

"-O" = ORANGE
"-Y" = YELLOW OCHRE

Model: CF-7.5			
Ref #	**Part #**	**Description**	**Qty**
1	C-7748	Grill Guard	1
2	C-7749	Inlet Cone - Painted	1
3	C-957	Blade and Hub Assembly	1
4	C-8108	Housing Assembly	1
5	C-7981	Motor - 1 Phase 230 Volt	1
5	C-7986	Motor - 3 Phase 208-230/460 Volt	1
5	712-3-5	Motor - 3 Phase 575 Volt	1
6	C-8322	Leg Bracket	5
7	C-7519	Leveling Leg	5
8	Reference	Control Box Assembly	1
9	Reference	Conduit Assembly	1
A	S-968	Nut Flange Whiz 3/8"-16 ZN Grade 5	16
B	S-3671	Fender Washer 25/64" x 1-1/2" ZN	24
C	S-9064	Bolt Flange 3/8"-16 x 1-1/2" ZN Grade 5	4
D	S-968	Nut Flange Whiz 3/8"-16 ZN Grade 5	4
E	S-6606	Bolt Flange 5/16"-18 x 3/4" ZN Grade 5	10
F	S-3611	Nut Flange Whiz 5/16"-18 ZN YDP	10
G	S-866	Flat Washer 3/4" USS ZN	5
H	S-234	Hex Nut 3/4"-10 ZN Grade 5	10
J	090-1709-6	Retainer Nut 5/16"-18 x 0.120" ZN	2
K	090-1709-6	Retainer Nut 5/16"-18 x 0.120" ZN	2

Model: CF-10			
Ref #	**Part #**	**Description**	**Qty**
1	C-7750	Grill Guard	1
2	C-7751	Inlet Cone - Painted	1
3	C-8533	Blade and Hub Assembly	1
4	C-8528	Housing Assembly	1
5	C-7982	Motor - 1 Phase 230 Volt	1
5	C-7987	Motor - 3 Phase 230/460 Volt	1
5	1000-3-5	Motor - 3 Phase 575 Volt	1
6	C-8322	Leg Bracket	5
7	C-7519	Leveling Leg	5
8	Reference	Control Box Assembly	1
9	Reference	Conduit Assembly	1
A	S-968	Nut Flange Whiz 3/8"-16 ZN Grade 5	16
B	S-3671	Fender Washer 25/64" x 1-1/2" ZN	24
C	S-9064	Bolt Flange 3/8"-16 x 1-1/2" ZN Grade 5	4
D	S-968	Nut Flange Whiz 3/8"-16 ZN Grade 5	4
E	S-6606	Bolt Flange 5/16"-18 x 3/4" ZN Grade 5	10
F	S-3611	Nut Flange Whiz 5/16"-18 ZN YDP	10
G	S-866	Flat Washer 3/4" USS ZN	5
H	S-234	Hex Nut 3/4"-10 ZN Grade 5	10
J	090-1709-6	Retainer Nut 5/16"-18 x 0.120" ZN	6
K	S-9344	Retainer Nut 5/16"-18 x 0.160" ZN	2

Main Assembly - 1750 RPM Fans (Continued)

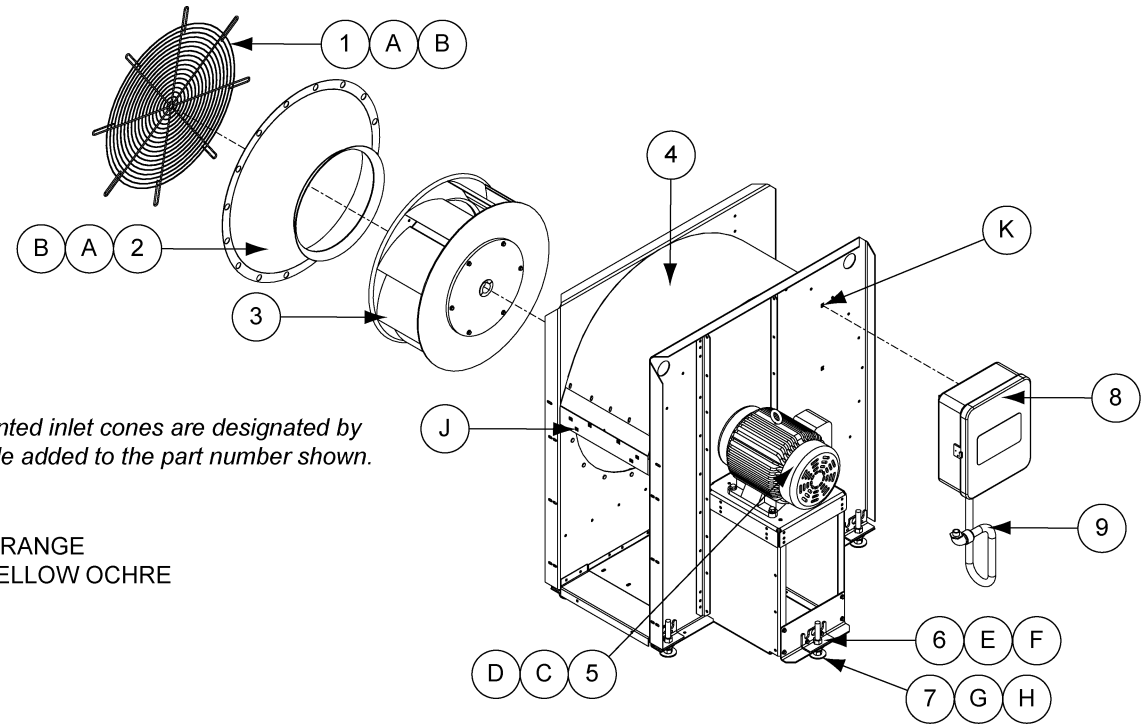

NOTE: *Painted inlet cones are designated by a suffix code added to the part number shown.*

"-O" = ORANGE
"-Y" = YELLOW OCHRE

Model: CF-15			
Ref #	**Part #**	**Description**	**Qty**
1	C-7750	Grill Guard	1
2	C-7751	Inlet Cone - Painted	1
3	C-960	Blade and Hub Assembly	1
4	C-8093	Housing Assembly	1
5	C-7983	Motor - 1 Phase 230 Volt	1
5	C-7988	Motor - 3 Phase 208-230/460 Volt	1
5	1500-3-5	Motor - 3 Phase 575 Volt	1
6	C-8322	Leg Bracket	5
7	C-7519	Leveling Leg	5
8	Reference	Control Box Assembly	1
9	Reference	Conduit Assembly	1
A	S-968	Nut Flange Whiz 3/8"-16 ZN Grade 5	16
B	S-3671	Fender Washer 25/64" x 1-1/2" ZN	24
C	S-8506	Nut Flange Whiz 1/2"-13 ZN	4
D	S-8856	Bolt Flange 1/2"-13 x 1-3/4" ZN Grade 5	4
E	S-6606	Bolt Flange 5/16"-18 x 3/4" ZN Grade 5	10
F	S-3611	Nut Flange Whiz 5/16"-18 ZN YDP	10
G	S-866	Flat Washer 3/4" USS ZN	5
H	S-234	Hex Nut 3/4"-10 ZN Grade 5	10
J	090-1709-6	Retainer Nut 5/16"-18 x 0.120" ZN	6
K	S-9344	Retainer Nut 5/16"-18 x 0.160" ZN	2

Model: CF-20			
Ref #	**Part #**	**Description**	**Qty**
1	C-7752	Grill Guard	1
2	C-7753	Inlet Cone - Painted	1
3	CH-2076	Blade and Hub Assembly	1
4	C-8097	Housing Assembly	1
5	C-7989	Motor - 3 Phase 208-230/460 Volt	1
5	2000-3-5	Motor - 3 Phase 575 Volt	1
6	C-8322	Leg Bracket	5
7	C-7519	Leveling Leg	5
8	Reference	Control Box Assembly	1
9	Reference	Conduit Assembly	1
A	S-968	Nut Flange Whiz 3/8"-16 ZN Grade 5	16
B	S-3671	Fender Washer 25/64" x 1-1/2" ZN	24
C	S-8506	Nut Flange Whiz 1/2"-13 ZN	4
D	S-8856	Bolt Flange 1/2"-13 x 1-3/4" ZN Grade 5	4
E	S-6606	Bolt Flange 5/16"-18 x 3/4" ZN Grade 5	10
F	S-3611	Nut Flange Whiz 5/16"-18 ZN YDP	10
G	S-866	Flat Washer 3/4" USS ZN	5
H	S-234	Hex Nut 3/4"-10 ZN Grade 5	10
J	090-1709-6	Retainer Nut 5/16"-18 x 0.120" ZN	2
K	S-9344	Retainer Nut 5/16"-18 x 0.160" ZN	2

Main Assembly - 1750 RPM Fans (Continued)

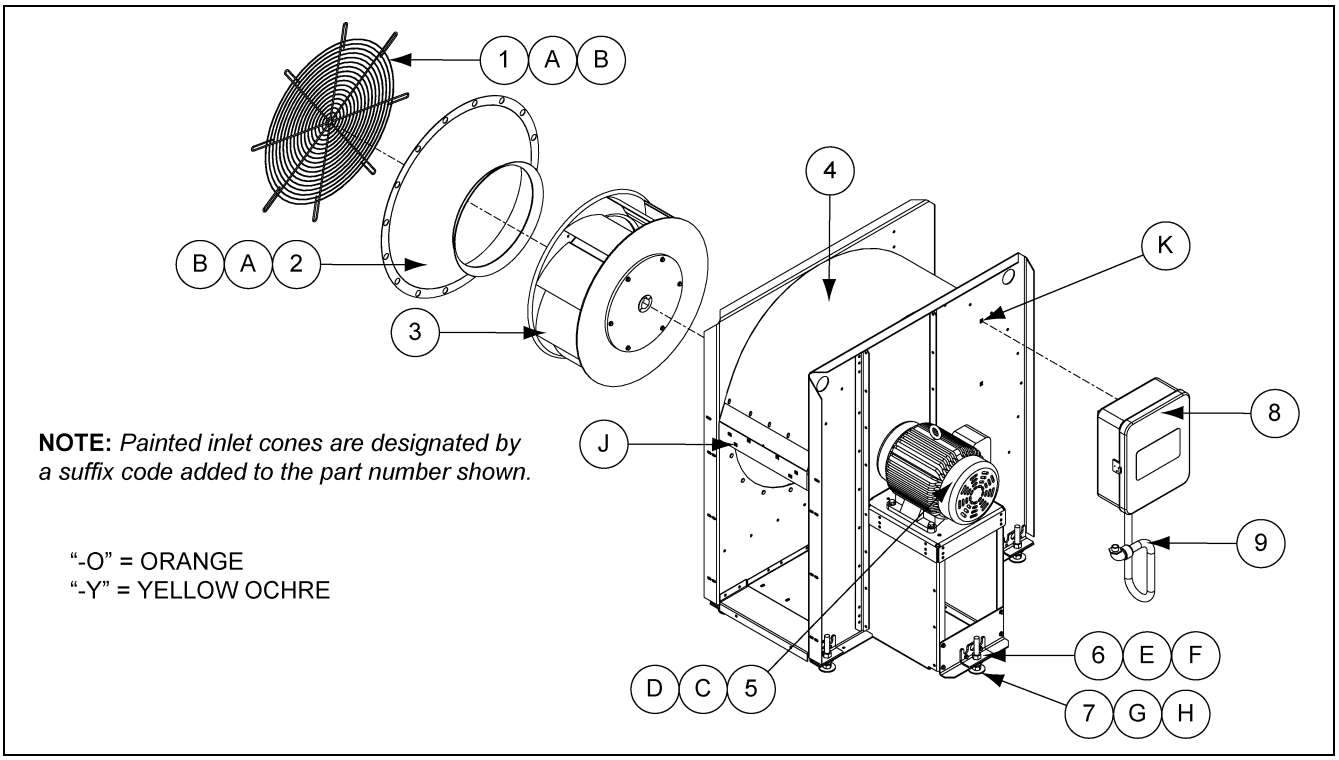

NOTE: *Painted inlet cones are designated by a suffix code added to the part number shown.*

"-O" = ORANGE
"-Y" = YELLOW OCHRE

Model: CF-25			
Ref #	**Part #**	**Description**	**Qty**
1	C-7752	Grill Guard	1
2	C-7753	Inlet Cone - Painted	1
3	C-2046	Blade and Hub Assembly	1
4	C-8096	Housing Assembly	1
5	C-7990	Motor - 3 Phase 208-230/460 Volt	1
5	2500-3-5	Motor - 3 Phase 575 Volt	1
6	C-8322	Leg Bracket	5
7	C-7519	Leveling Leg	5
8	Reference	Control Box Assembly	1
9	Reference	Conduit Assembly	1
A	S-968	Nut Flange Whiz 3/8"-16 ZN Grade 5	16
B	S-3671	Fender Washer 25/64" x 1-1/2" ZN	24
C	S-8506	Nut Flange Whiz 1/2"-13 ZN	4
D	S-8856	Bolt Flange 1/2"-13 x 1-3/4" ZN Grade 5	4
E	S-6606	Bolt Flange 5/16"-18 x 3/4" ZN Grade 5	10
F	S-3611	Nut Flange Whiz 5/16"-18 ZN YDP	10
G	S-866	Flat Washer 3/4" USS ZN	5
H	S-234	Hex Nut 3/4"-10 ZN Grade 5	10
J	090-1709-6	Retainer Nut 5/16"-18 x 0.120" ZN	2
K	S-9344	Retainer Nut 5/16"-18 x 0.160" ZN	2

Model: CF-30			
Ref #	**Part #**	**Description**	**Qty**
1	C-7752	Grill Guard	1
2	C-7754	Inlet Cone - Painted	1
3	C-7319	Blade and Hub Assembly	1
4	C-8125	Housing Assembly	1
5	C-7991	Motor - 3 Phase 208-230/460 Volt	1
5	CH-6917	Motor - 3 Phase 575 Volt	1
6	C-8322	Leg Bracket	5
7	C-7519	Leveling Leg	5
8	Reference	Control Box Assembly	1
9	Reference	Conduit Assembly	1
A	S-968	Nut Flange Whiz 3/8"-16 ZN Grade 5	16
B	S-3671	Fender Washer 25/64" x 1-1/2" ZN	24
C	S-8506	Nut Flange Whiz 1/2"-13 ZN	4
D	S-8856	Bolt Flange 1/2"-13 x 1-3/4" ZN Grade 5	4
E	S-6606	Bolt Flange 5/16"-18 x 3/4" ZN Grade 5	10
F	S-3611	Nut Flange Whiz 5/16"-18 ZN YDP	10
G	S-866	Flat Washer 3/4" USS ZN	5
H	S-234	Hex Nut 3/4"-10 ZN Grade 5	10
J	090-1709-6	Retainer Nut 5/16"-18 x 0.120" ZN	2
K	S-9344	Retainer Nut 5/16"-18 x 0.160" ZN	2

Main Assembly - 1750 RPM Fans (Continued)

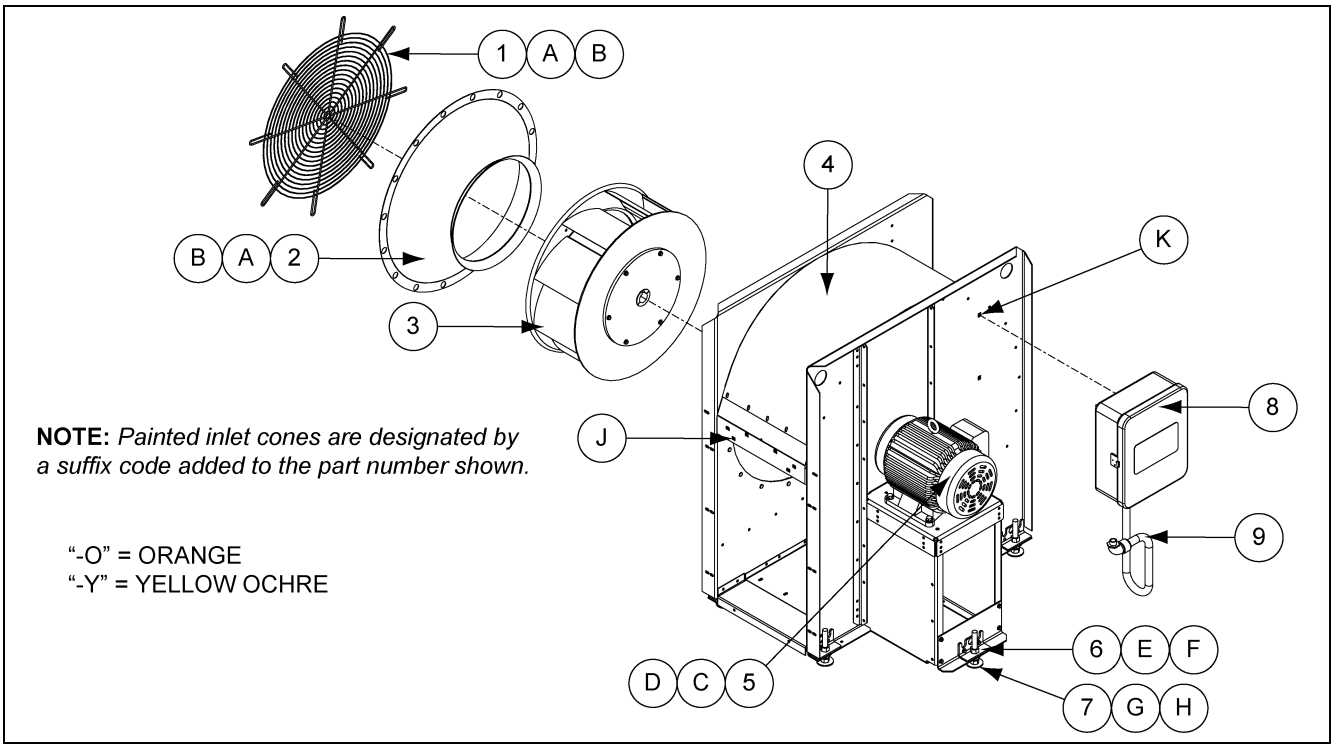

NOTE: *Painted inlet cones are designated by a suffix code added to the part number shown.*

"-O" = ORANGE
"-Y" = YELLOW OCHRE

Model: CF-40			
Ref #	**Part #**	**Description**	**Qty**
1	C-7752	Grill Guard	1
2	C-7754	Inlet Cone - Painted	1
3	C-7320	Blade and Hub Assembly	1
4	C-8130	Housing Assembly	1
5	C-7992	Motor - 3 Phase 208-230/460 Volt	1
5	CH-6918	Motor - 3 Phase 575 Volt	1
6	C-8322	Leg Bracket	5
7	C-7519	Leveling Leg	5
8	Reference	Control Box Assembly	1
9	Reference	Conduit Assembly	1
A	S-968	Nut Flange Whiz 3/8"-16 ZN Grade 5	16
B	S-3671	Fender Washer 25/64" x 1-1/2" ZN	24
C	S-8506	Nut Flange Whiz 1/2"-13 ZN	4
D	S-8856	Bolt Flange 1/2"-13 x 1-3/4" ZN Grade 5	4
E	S-6606	Bolt Flange 5/16"-18 x 3/4" ZN Grade 5	10
F	S-3611	Nut Flange Whiz 5/16"-18 ZN YDP	10
G	S-866	Flat Washer 3/4" USS ZN	5
H	S-234	Hex Nut 3/4"-10 ZN Grade 5	10
J	090-1709-6	Retainer Nut 5/16"-18 x 0.120" ZN	2
K	S-9344	Retainer Nut 5/16"-18 x 0.160" ZN	2

Model: CF-50			
Ref #	**Part #**	**Description**	**Qty**
1	C-7752	Grill Guard	1
2	C-7754	Inlet Cone - Painted	1
3	C-8517	Blade and Hub Assembly	1
4	C-8233	Housing Assembly	1
5	C-7993	Motor - 3 Phase 208-230/460 Volt	1
5	C-8003	Motor - 3 Phase 575 Volt	1
6	C-8322	Leg Bracket	5
7	C-7519	Leveling Leg	5
8	Reference	Control Box Assembly	1
9	Reference	Conduit Assembly	1
A	S-968	Nut Flange Whiz 3/8"-16 ZN Grade 5	16
B	S-3671	Fender Washer 25/64" x 1-1/2" ZN	24
C	S-8506	Nut Flange Whiz 1/2"-13 ZN	4
D	S-8856	Bolt Flange 1/2"-13 x 1-3/4" ZN Grade 5	4
E	S-6606	Bolt Flange 5/16"-18 x 3/4" ZN Grade 5	10
F	S-3611	Nut Flange Whiz 5/16"-18 ZN YDP	10
G	S-866	Flat Washer 3/4" USS ZN	5
H	S-234	Hex Nut 3/4"-10 ZN Grade 5	10
J	090-1709-6	Retainer Nut 5/16"-18 x 0.120" ZN	3
K	S-9344	Retainer Nut 5/16"-18 x 0.160" ZN	2

Main Assembly - 3500 RPM Fans

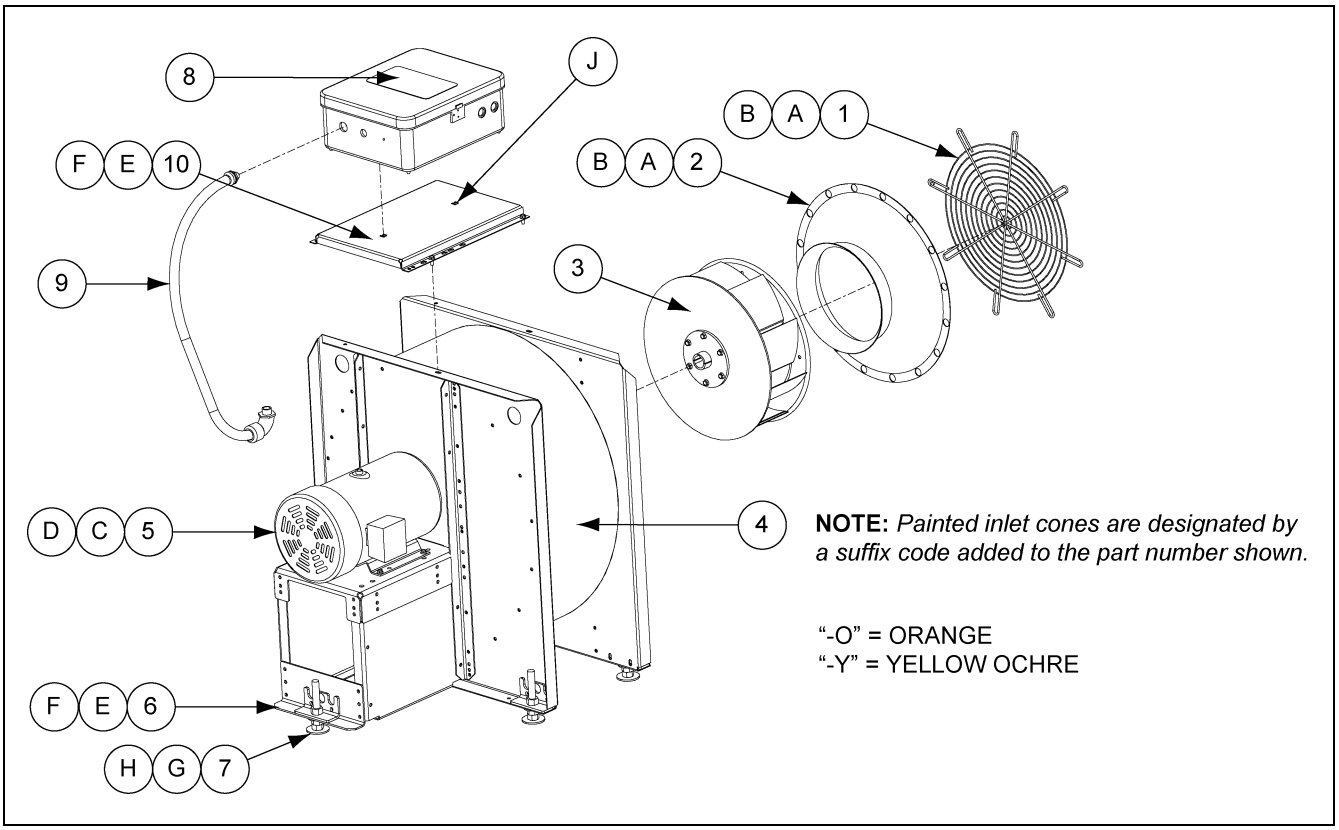

Model: CHS-3			
Ref #	**Part #**	**Description**	**Qty**
1	C-7742	Grill Guard	1
2	C-7743	Inlet Cone - Painted	1
3	FH-5464	Blade and Hub Assembly	1
4	C-8223	Housing Assembly	1
5	FH-5474	Motor - 1 Phase 230 Volt	1
5	FH-5475	Motor - 3 Phase 208-230/460 Volt	1
5	CH-6826	Motor - 3 Phase 575 Volt	1
6	C-8322	Leg Bracket	5
7	C-7519	Leveling Leg	5
8	Reference	Control Box Assembly	1
9	Reference	Conduit Assembly	1
10	C-8261	Control Box Adapter Plate - CHS	1
A	S-968	Nut Flange Whiz 3/8"-16 ZN Grade 5	8
B	S-3671	Fender Washer 25/64" x 1-1/2" ZN	12
C	S-9064	Bolt Flange 3/8"-16 x 1-1/2" ZN Grade 5	4
D	S-968	Nut Flange Whiz 3/8"-16 ZN Grade 5	4
E	S-6606	Bolt Flange 5/16"-18 x 3/4" ZN Grade 5	14
F	S-3611	Nut Flange Whiz 5/16"-18 ZN YDP	14
G	S-866	Flat Washer 3/4" USS ZN	5
H	S-234	Hex Nut 3/4"-10 ZN Grade 5	10
J	090-1709-6	Retainer Nut 5/16"-18 x 0.120" ZN	2

Model: CHS-5			
Ref #	**Part #**	**Description**	**Qty**
1	C-7742	Grill Guard	1
2	C-7743	Inlet Cone - Painted	1
3	FH-5465	Blade and Hub Assembly	1
4	C-8222	Housing Assembly	1
5	FH-5476	Motor - 1 Phase 230 Volt	1
5	FH-5477	Motor - 3 Phase 208-230/460 Volt	1
5	CH-6827	Motor - 3 Phase 575 Volt	1
6	C-8322	Leg Bracket	5
7	C-7519	Leveling Leg	5
8	Reference	Control Box Assembly	1
9	Reference	Conduit Assembly	1
10	C-8261	Control Box Adapter Plate - CHS	1
A	S-968	Nut Flange Whiz 3/8"-16 ZN Grade 5	8
B	S-3671	Fender Washer 25/64" x 1-1/2" ZN	12
C	S-9064	Bolt Flange 3/8"-16 x 1-1/2" ZN Grade 5	4
D	S-968	Nut Flange Whiz 3/8"-16 ZN Grade 5	4
E	S-6606	Bolt Flange 5/16"-18 x 3/4" ZN Grade 5	14
F	S-3611	Nut Flange Whiz 5/16"-18 ZN YDP	14
G	S-866	Flat Washer 3/4" USS ZN	5
H	S-234	Hex Nut 3/4"-10 ZN Grade 5	10
J	090-1709-6	Retainer Nut 5/16"-18 x 0.120" ZN	2

Main Assembly - 3500 RPM Fans (Continued)

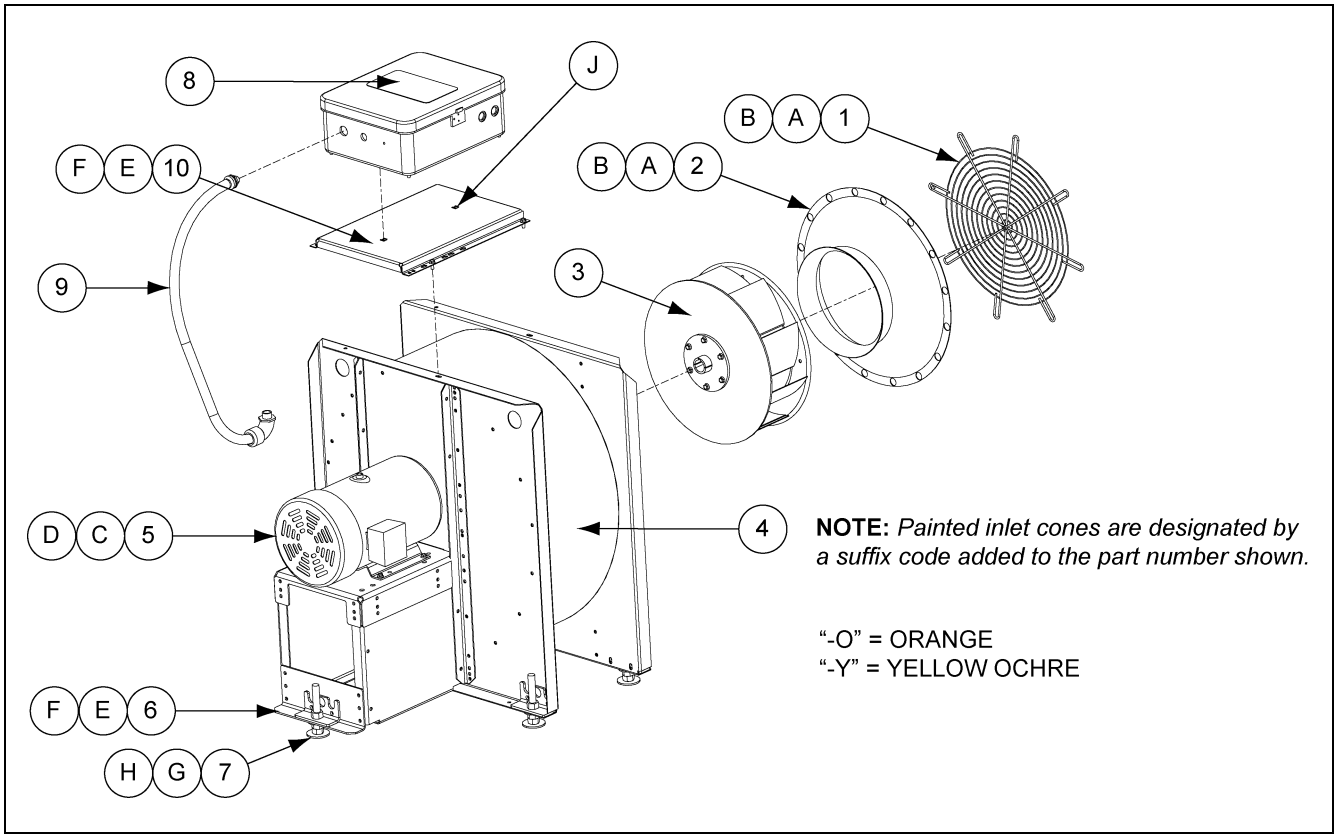

Model: CHS-7.5			
Ref #	**Part #**	**Description**	**Qty**
1	C-7744	Grill Guard	1
2	C-7745	Inlet Cone - Painted	1
3	FH-5466	Blade and Hub Assembly	1
4	C-8214	Housing Assembly	1
5	FH-5478	Motor - 1 Phase 230 Volt	1
5	FH-5479	Motor - 3 Phase 208-230/460 Volt	1
5	CH-6828	Motor - 3 Phase 575 Volt	1
6	C-8322	Leg Bracket	5
7	C-7519	Leveling Leg	5
8	Reference	Control Box Assembly	1
9	Reference	Conduit Assembly	1
10	C-8261	Control Box Adapter Plate - CHS	1
A	S-968	Nut Flange Whiz 3/8"-16 ZN Grade 5	16
B	S-3671	Fender Washer 25/64" x 1-1/2" ZN	24
C	S-9064	Bolt Flange 3/8"-16 x 1-1/2" ZN Grade 5	4
D	S-968	Nut Flange Whiz 3/8"-16 ZN Grade 5	4
E	S-6606	Bolt Flange 5/16"-18 x 3/4" ZN Grade 5	14
F	S-3611	Nut Flange Whiz 5/16"-18 ZN YDP	14
G	S-866	Flat Washer 3/4" USS ZN	5
H	S-234	Hex Nut 3/4"-10 ZN Grade 5	10
J	090-1709-6	Retainer Nut 5/16"-18 x 0.120" ZN	2

Model: CHS-10			
Ref #	**Part #**	**Description**	**Qty**
1	C-7744	Grill Guard	1
2	C-7745	Inlet Cone - Painted	1
3	FH-5467	Blade and Hub Assembly	1
4	C-8156	Housing Assembly	1
5	FH-5480	Motor - 1 Phase 230 Volt	1
5	FH-5481	Motor - 3 Phase 230/460 Volt	1
5	CH-6829	Motor - 3 Phase 575 Volt	1
6	C-8322	Leg Bracket	5
7	C-7519	Leveling Leg	5
8	Reference	Control Box Assembly	1
9	Reference	Conduit Assembly	1
10	C-8261	Control Box Adapter Plate - CHS	1
A	S-968	Nut Flange Whiz 3/8"-16 ZN GR5	16
B	S-3671	Fender Washer 25/64" x 1-1/2" ZN	24
C	S-9064	Bolt Flange 3/8"-16 x 1-1/2" ZN Grade 5	4
D	S-968	Nut Flange Whiz 3/8"-16 ZN Grade 5	4
E	S-6606	Bolt Flange 5/16"-18 x 3/4" ZN Grade 5	14
F	S-3611	Nut Flange Whiz 5/16"-18 ZN YDP	14
G	S-866	Flat Washer 3/4" USS ZN	5
H	S-234	Hex Nut 3/4"-10 ZN Grade 5	10
J	090-1709-6	Retainer Nut 5/16"-18 x 0.120 ZN	2

Main Assembly - 3500 RPM Fans (Continued)

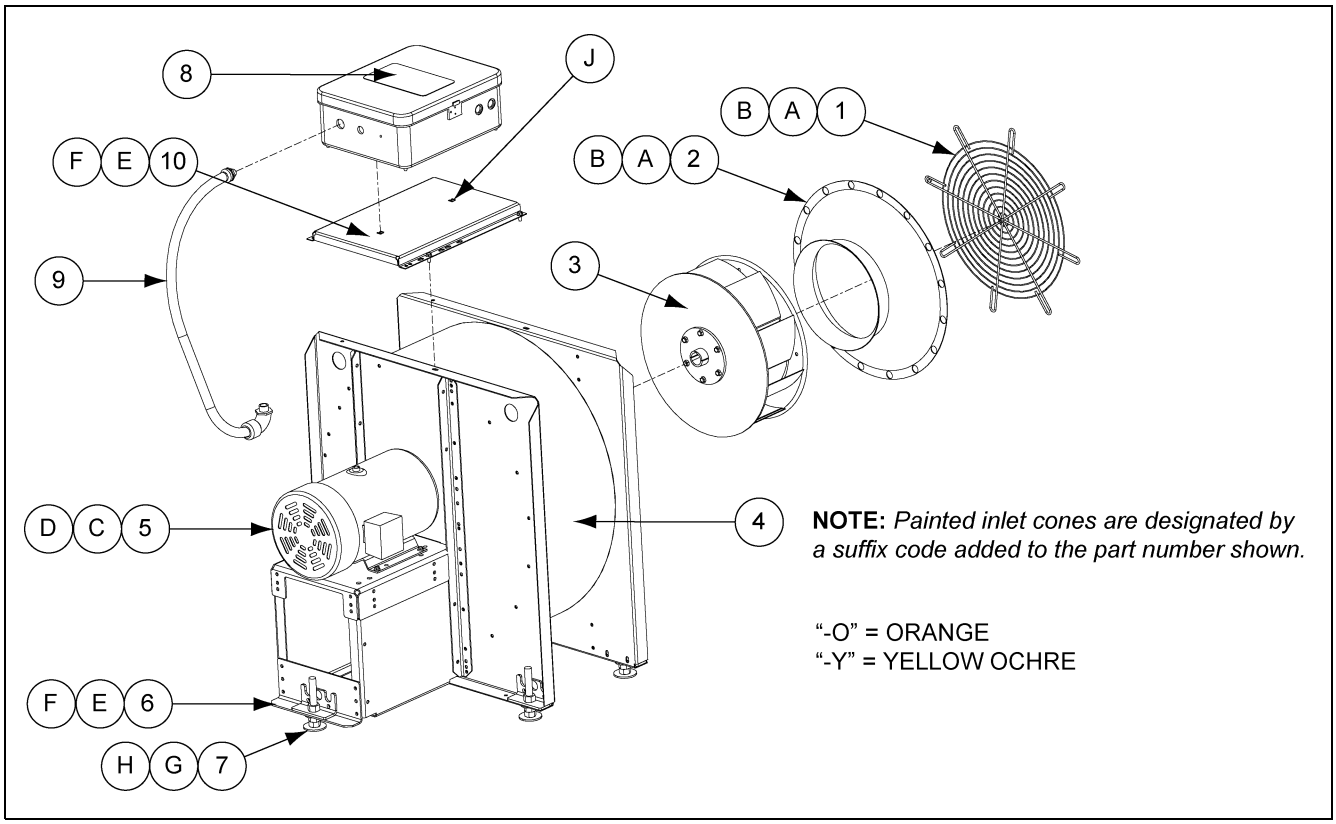

Model: CHS-15			
Ref #	**Part #**	**Description**	**Qty**
1	C-7744	Grill Guard	1
2	C-7745	Inlet Cone - Painted	1
3	FH-5468	Blade and Hub Assembly	1
4	C-8162	Housing Assembly	1
5	FH-5483	Motor - 3 Phase 208-230/460 Volt	1
5	CH-6830	Motor - 3 Phase 575 Volt	1
6	C-8322	Leg Bracket	5
7	C-7519	Leveling Leg	5
8	Reference	Control Box Assembly	1
9	Reference	Conduit Assembly	1
10	C-8261	Control Box Adapter Plate - CHS	1
A	S-968	Nut Flange Whiz 3/8"-16 ZN Grade 5	16
B	S-3671	Fender Washer 25/64" x 1-1/2" ZN	24
C	S-9064	Bolt Flange 3/8"-16 x 1-1/2" ZN Grade 5	4
D	S-968	Nut Flange Whiz 3/8"-16 ZN Grade 5	4
E	S-6606	Bolt Flange 5/16"-18 x 3/4" ZN Grade 5	14
F	S-3611	Nut Flange Whiz 5/16"-18 ZN YDP	14
G	S-866	Flat Washer 3/4" USS ZN	5
H	S-234	Hex Nut 3/4"-10 ZN Grade 5	10
J	090-1709-6	Retainer Nut 5/16"-18 x 0.160" ZN	2

Model: CHS-20			
Ref #	**Part #**	**Description**	**Qty**
1	C-7746	Grill Guard	1
2	C-7747	Inlet Cone - Painted	1
3	FH-5469	Blade and Hub Assembly	1
4	C-8194	Housing Assembly	1
5	FH-5484	Motor - 3 Phase 208-230/460 Volt	1
5	CH-6832	Motor - 3 Phase 575 Volt	1
6	C-8322	Leg Bracket	5
7	C-7519	Leveling Leg	5
8	Reference	Control Box Assembly	1
9	Reference	Conduit Assembly	1
10	C-8261	Control Box Adapter Plate - CHS	1
A	S-968	Nut Flange Whiz 3/8"-16 ZN Grade 5	16
B	S-3671	Fender Washer 25/64" x 1-1/2" ZN	24
C	S-8506	Nut Flange Whiz 1/2"-13 ZN	4
D	S-8856	Bolt Flange 1/2"-13 x 1-3/4" ZN Grade 5	4
E	S-6606	Bolt Flange 5/16"-18 x 3/4" ZN Grade 5	14
F	S-3611	Nut Flange Whiz 5/16"-18 ZN YDP	14
G	S-866	Flat Washer 3/4" USS ZN	5
H	S-234	Hex Nut 3/4"-10 ZN Grade 5	10
J	090-1709-6	Retainer Nut 5/16"-18 x 0.160" ZN	2

Main Assembly - 3500 RPM Fans (Continued)

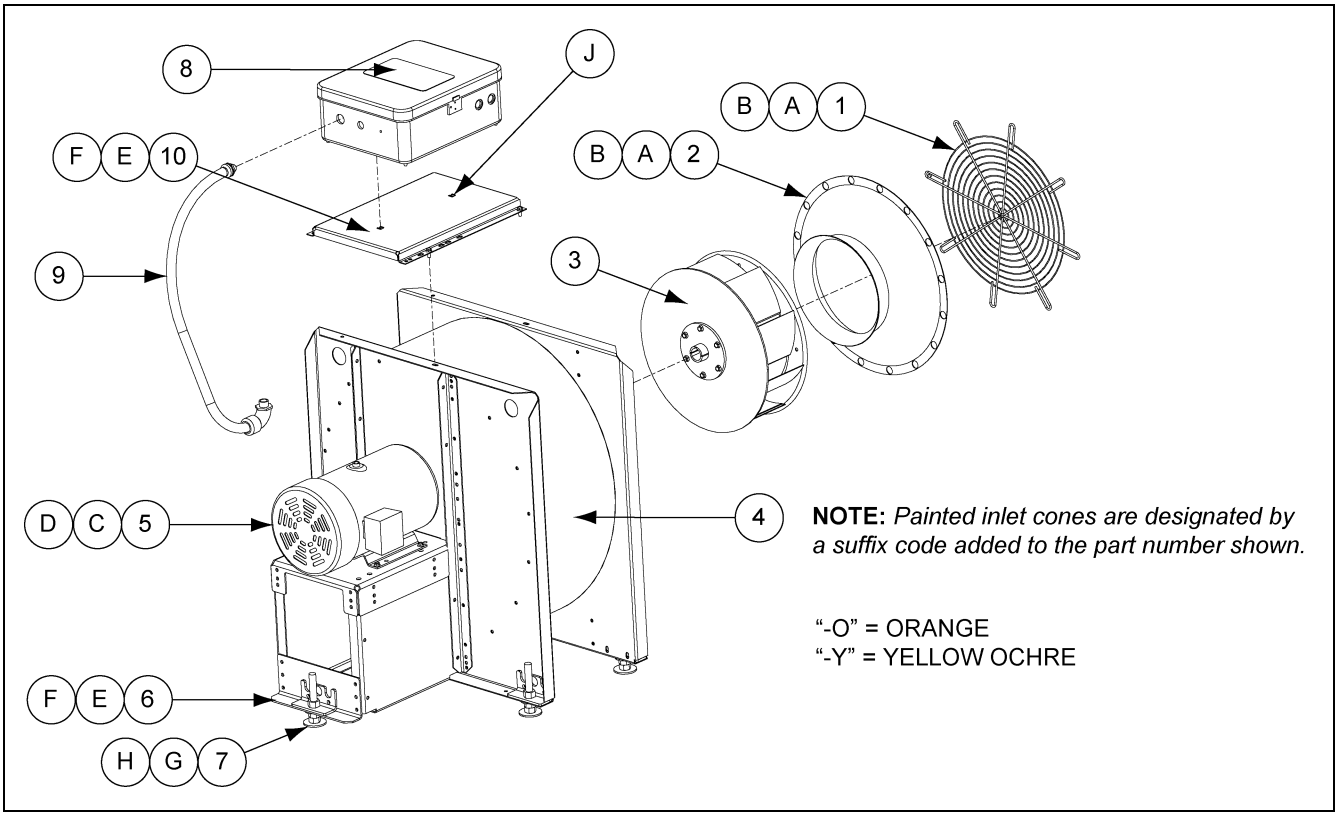

Model: CHS-30			
Ref #	**Part #**	**Description**	**Qty**
1	C-7746	Grill Guard	1
2	C-7747	Inlet Cone - Painted	1
3	FH-5758	Blade and Hub Assembly	1
4	C-8195	Housing Assembly	1
5	CH-5582	Motor - 3 Phase 208-230/460 Volt	1
5	CH-6836	Motor - 3 Phase 575 Volt	1
6	C-8322	Leg Bracket	5
7	C-7519	Leveling Leg	5
8	Reference	Control Box Assembly	1
9	Reference	Conduit Assembly	1
10	C-8261	Control Box Adapter Plate - CHS	1
A	S-968	Nut Flange Whiz 3/8"-16 ZN Grade 5	16
B	S-3671	Fender Washer 25/64" x 1-1/2" ZN	24
C	S-8506	Nut Flange Whiz 1/2"-13 ZN	4
D	S-8856	Bolt Flange 1/2"-13 x 1-3/4" ZN Grade 5	4
E	S-6606	Bolt Flange 5/16"-18 x 3/4" ZN Grade 5	14
F	S-3611	Nut Flange Whiz 5/16"-18 ZN YDP	14
G	S-866	Flat Washer 3/4" USS ZN	5
H	S-234	Hex Nut 3/4"-10 ZN Grade 5	10
J	090-1709-6	Retainer Nut 5/16"-18 x 0.120" ZN	2

Model: CHS-40			
Ref #	**Part #**	**Description**	**Qty**
1	C-7746	Grill Guard	1
2	C-7747	Inlet Cone - Painted	1
3	FH-5758	Blade and Hub Assembly	1
4	C-8196	Housing Assembly	1
5	CH-5582	Motor - 3 Phase 230/460 Volt	1
5	CH-6836	Motor - 3 Phase 575 Volt	1
6	C-8322	Leg Bracket	5
7	C-7519	Leveling Leg	5
8	Reference	Control Box Assembly	1
9	Reference	Conduit Assembly	1
10	C-8261	Control Box Adapter Plate - CHS	1
A	S-968	Nut Flange Whiz 3/8"-16 ZN Grade 5	16
B	S-3671	Fender Washer 25/64" x 1-1/2" ZN	24
C	S-8506	Nut Flange Whiz 1/2"-13 ZN	4
D	S-8856	Bolt Flange 1/2"-13 x 1-3/4" ZN Grade 5	4
E	S-6606	Bolt Flange 5/16"-18 x 3/4" ZN Grade 5	14
F	S-3611	Nut Flange Whiz 5/16"-18 ZN YDP	14
G	S-866	Flat Washer 3/4" USS ZN	5
H	S-234	Hex Nut 3/4"-10 ZN Grade 5	10
J	090-1709-6	Retainer Nut 5/16"-18 x 0.120" ZN	2

Main Assembly - 3500 RPM Fans (Continued)

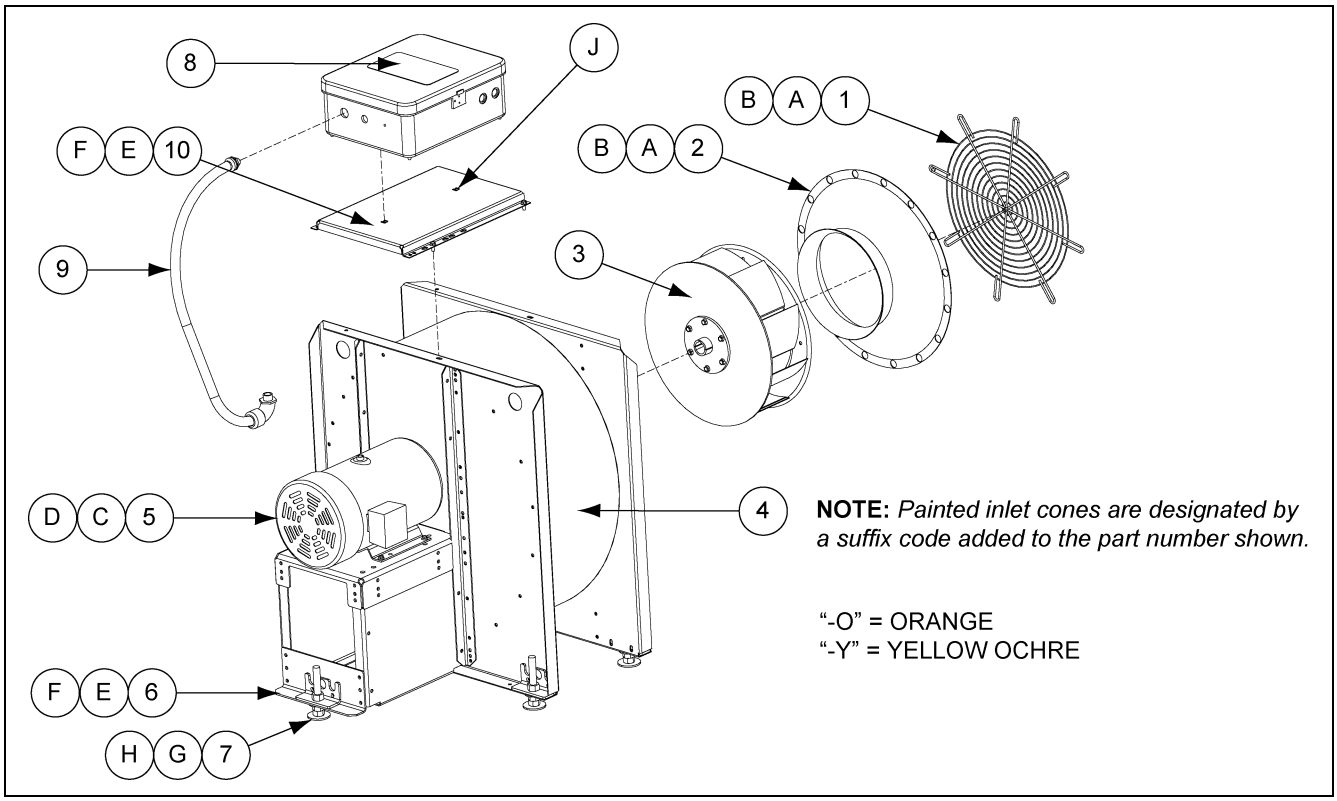

Model: CHS-50			
Ref #	**Part #**	**Description**	**Qty**
1	C-7748	Grill Guard	1
2	C-7749	Inlet Cone - Painted	1
3	FH-5852	Blade and Hub Assembly	1
4	C-8197	Housing Assembly	1
5	CH-5583	Motor - 3 Phase 208-230/460 Volt	1
5	CH-6838	Motor - 3 Phase 575 Volt	1
6	C-8322	Leg Bracket	5
7	C-7519	Leveling Leg	5
8	Reference	Control Box Assembly	1
9	Reference	Conduit Assembly	1
10	C-8261	Control Box Adapter Plate - CHS	1
A	S-968	Nut Flange Whiz 3/8"-16 ZN Grade 5	16
B	S-3671	Fender Washer 25/64" x 1-1/2" ZN	24
C	S-8506	Nut Flange Whiz 1/2"-13 ZN	4
D	S-8856	Bolt Flange 1/2"-13 x 1-3/4" ZN Grade 5	4
E	S-6606	Bolt Flange 5/16"-18 x 3/4" ZN Grade 5	14
F	S-3611	Nut Flange Whiz 5/16"-18 ZN YDP	14
G	S-866	Flat Washer 3/4" USS ZN	5
H	S-234	Hex Nut 3/4"-10 ZN Grade 5	10
J	090-1709-6	Retainer Nut 5/16"-18 x 0.160" ZN	2

Main Assembly - Double Inlet Fan

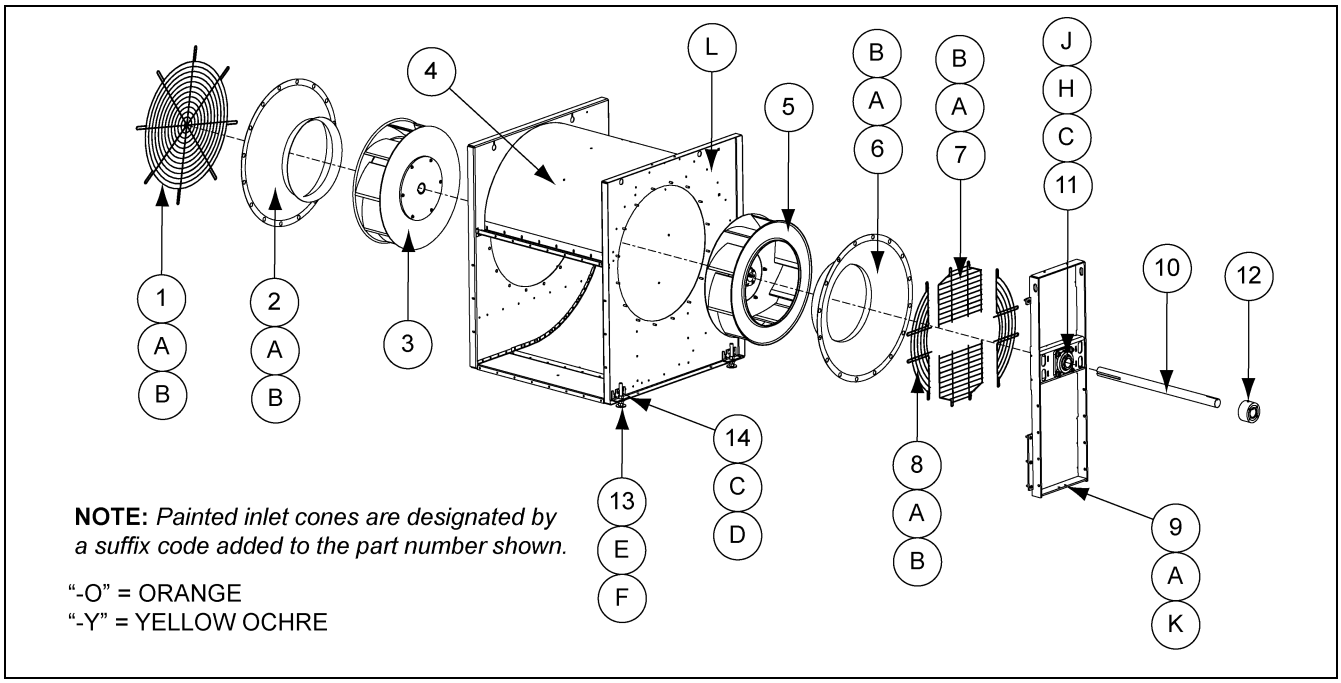

Main Assembly - Double Inlet Fan Parts List

Ref #	Part #	Description	Qty
1	C-7752	Grill Guard: 30"/33" Painted	1
2	C-7753	Inlet Cone: 30" Painted	1
3	C-7040	Blade Assembly D.I. 30 HP Standard	1
3	C-7315	Blade Assembly D.I. 40 HP Standard	1
3	C-7044	Blade Assembly D.I. 50 HP Standard	1
4	C-8188	C.F D.I Housing Assembly: Bolted	1
5	C-7042	Blade Assembly D.I. 30 HP Rev	1
5	C-7316	Blade Assembly D.I. 40 HP Rev	1
5	C-7045	Blade Assembly D.I. 50 HP Rev	1
6	C-7753-G	Inlet Cone: 30" Gray C.F	1
7	C-8415-W	Guard - Grill D.I C.F Top/Bottom White	2
8	C-8414-W	Guard - Grill D.I C.F Side - White	2
9	C-8409	D.I External Bearing Mount Weldment	1
10	C-8396	D.I Drive Shaft - 2.188"	1
11	C-8395	Bearing - Griptight 211 2.188 4B	2

Ref #	Part #	Description	Qty
12	C-8570	Companion Flange Kit - C.F Fans	1
13	C-7519	Leveling Leg	4
14	C-8322	Leveling Leg Bracket - 0.438 Holes	2
A	S-968	Nut Flange Whiz 3/8"-16 ZN Grade 5	63
B	S-3671	Fender Washer 25/64" x 1-1/2" ZN	52
C	S-3611	Nut Flange Whiz 5/16"-18 ZN YDP	32
D	S-6606	Bolt Flange 5/16"-18 x 3/4" ZN Grade 5	32
E	S-866	Flat Washer 3/4" USS ZN	2
F	S-234	Hex Nut 3/4"-10 ZN Grade 5	4
G	S-4329	Bolt HHCS 5/8"-11 x 2" YW ZN Grade 8	8
H	S-6494	Lock Nut 5/8"-11 ZN Grade 5 Deformd	8
J	S-7400	Flat Washer 5/8" SAE ZN Grade 2	17
K	S-9064	Bolt Flange 3/8"-16 x 1-1/2" ZN Grade 5	31
L	S-9344	Retainer Nut 5/16"-18 x 0.160" ZN	2

Grease Hose Assembly (Not Shown) Parts List

Ref #	Part #	Description	Qty
Ref	C-7865	Hose, Grease 30" w/ 1/4" NPT	1
Ref	C-8441	Grease - 10 PK Cart-Mobil SHC 100	0.1
Ref	HF-7226	Nipple 1/8 x Close Standard Black	1
Ref	HF-7227	Coupling 1/4 Standard Black Steel S/T	2
Ref	S-2121	Flat Washer 1/2" 0.562" x 1.375" x 0.10"	1
Ref	HF-7228	Bushing 1/4-1/8 Black Hex	2

Internal Bearing Arch Assembly - Double Inlet Fan

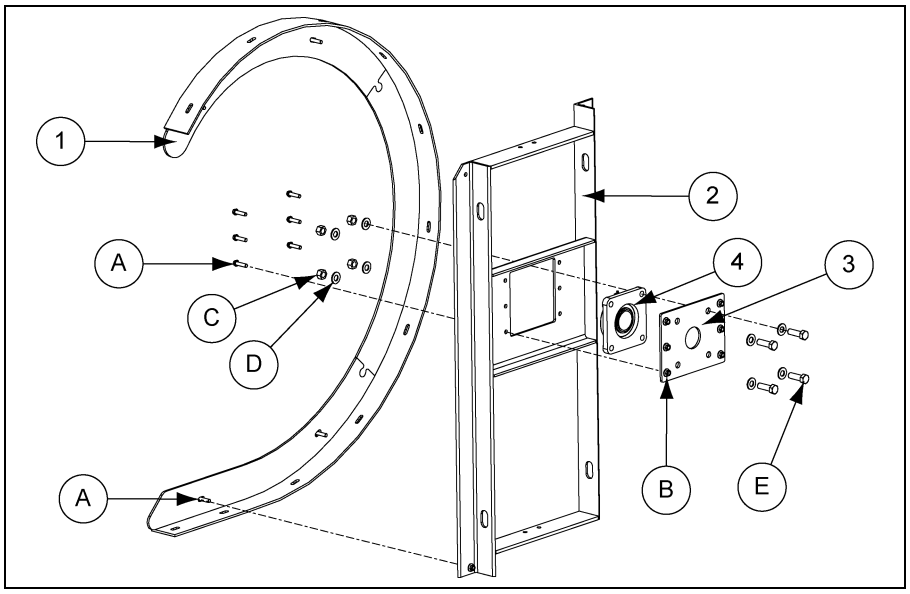

Internal Bearing Arch Assembly - Double Inlet Fan Parts List

Ref #	Part #	Description	Qty
1	C-7709	Bearing Arch Weldment	1
2	C-8446	C.F D.I Internal Bearing Weld - 04	1
3	C-8447	D.I C.F Internal Bearing Mount Plate	1
4	C-8395	Bearing - Griptight 211 2.188 4B	1
A	S-9064	Bolt Flange 3/8"-16 x 1-1/2" ZN Grade 5	10
B	S-968	Nut Flange Whiz 3/8"-16 ZN Grade 5	10
C	S-6494	Lock Nut 5/8"-11 ZN Grade 5 Deformd	4
D	S-7400	Flat Washer 5/8" SAE ZN Grade 2	8
E	S-4329	Bolt HHCS 5/8"-11 x 2" YW ZN Grade 8	4

Companion Flange Kit - C-8570

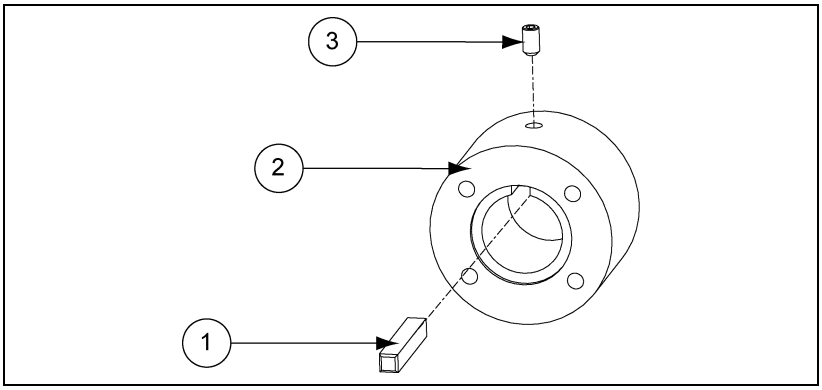

Companion Flange Kit - C-8570 Parts List

Ref #	Part #	Description	Qty
1	C-8394	Square Key 1/2" x 3-1/4"	1
2	C-8550	Flange - Companion 2.188" Shaft	1
3	S-9355	Set Screw 7/16"-20 x 3/4" SKT Cup	1

Motor Drives - Double Inlet Fan

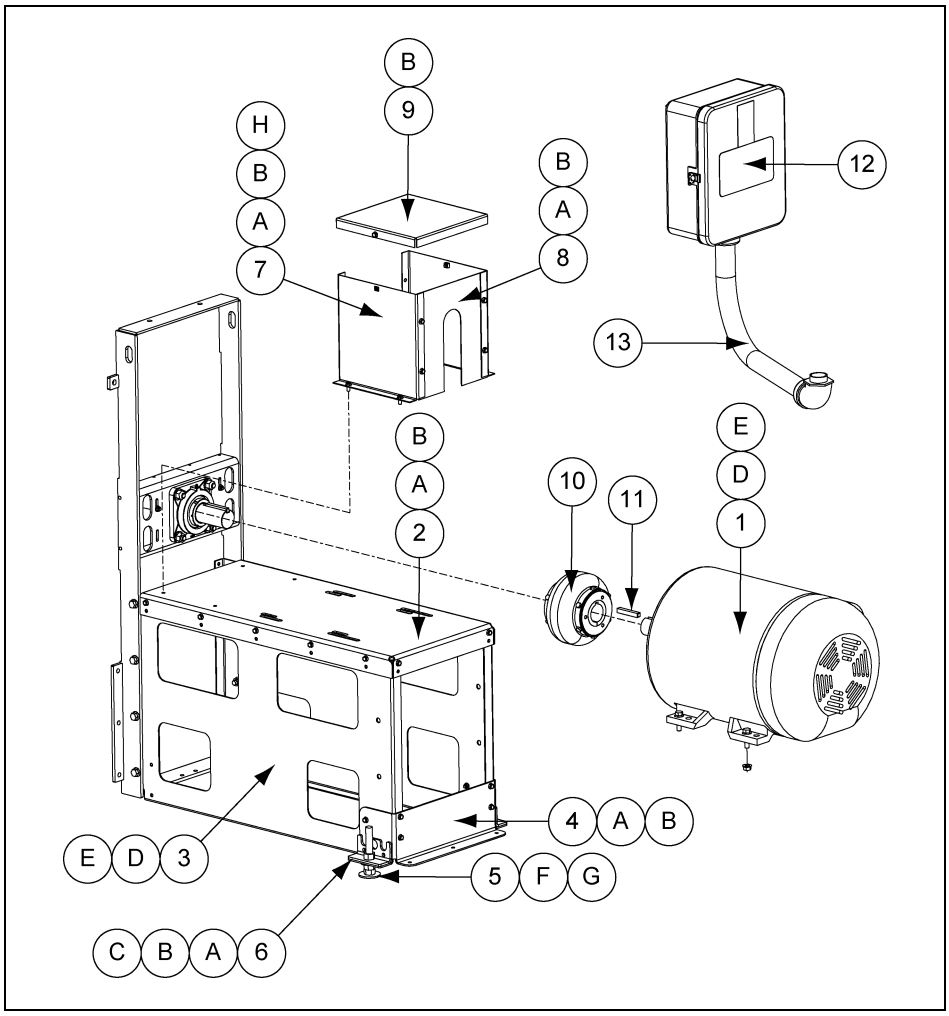

External Bearing Mount Assembly

Ref #	Part #	Description	Qty
1	3000-3	Motor 30 HP 3 PH 1800 RPM	1
1	4000-3	Motor 40 HP 3 PH 1800 RPM	1
1	5000-3	Motor 50 HP 3 PH 1800 RPM	1
2	C-8403	D.I Motor Mount Top Plate	1
3	C-8404	D.I Motor Mount Side Plate	2
4	C-8405	D.I Motor Mount Leg Attach Angle	1
5	C-7519	Leveling Leg	2
6	C-8322	Leveling Leg Bracket - 0.438 Holes	2
7	C-8417	Guard Side D.I C.F Coupling	2
8	C-8418	Guard Front D.I C.F Coupling	1
9	C-8449	Guard Top Cover D.I C.F Coupling	1
10	Reference	Shaft Coupling	1

Ref #	Part #	Description	Qty
11	C-8394	Square Key 1/2" x 3-1/4"	2
12	Reference	Control Box Assembly	1
13	Reference	Conduit Assembly	1
A	S-3611	Nut Flange Whiz 5/16"-18 ZN YDP	32
B	S-6606	Bolt Flange 5/16"-18 x 3/4" ZN Grade 5	32
C	S-7470	Bolt Flange 5/16"-18 x 1" ZN Grade 5	2
D	S-8506	Nut Flange Whiz 1/2"-13 ZN	12
E	S-9062	Bolt Flange 1/2"-13 x 1-1/4" ZN Grade 5	12
F	S-866	Flat Washer 3/4" USS ZN	2
G	S-234	Hex Nut 3/4"-10 ZN Grade 5	2
H	090-1709-6	Retainer Nut 5/16"-18 x 0.120" ZN	2

Shaft Coupling

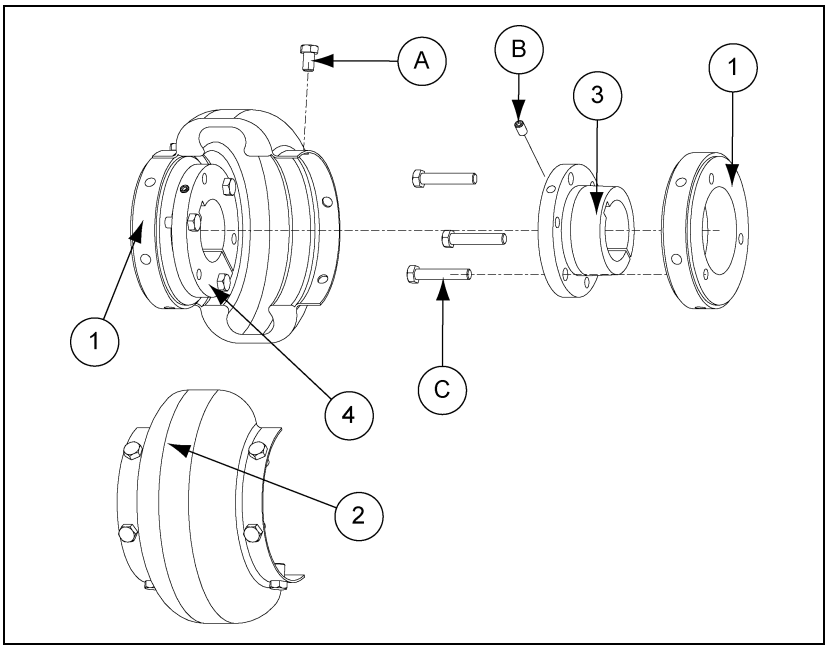

Shaft Coupling Parts List

Ref #	Part #	Description	Qty
1	C-8411	Coupling Hub - 30 HQD Steel QD	2
2	C-8412	Coupling Element Flex w/ Bolts (Pair)	1
3	MHC01162	Bushing SF 1-7/8 - 30 HP	1
3	GT3-0068	Bushing QD SF 2-1/8" - 40 and 50 HP	1
4	CE-00616	Bushing QD SF 2-3/16"	1
A	S-7185	Bolt HHCS 3/8"-16 x 5/8" ZN Grade 2	12
B	S-7371	Set Screw 5/16"-18 x 1/2" SKT HD	2
C	S-8003	Bolt HHCS 3/8"-16 x 2" ZN Grade 5	6

Small Control Panel 1 Phase 230 Volt (CPS-230-1)

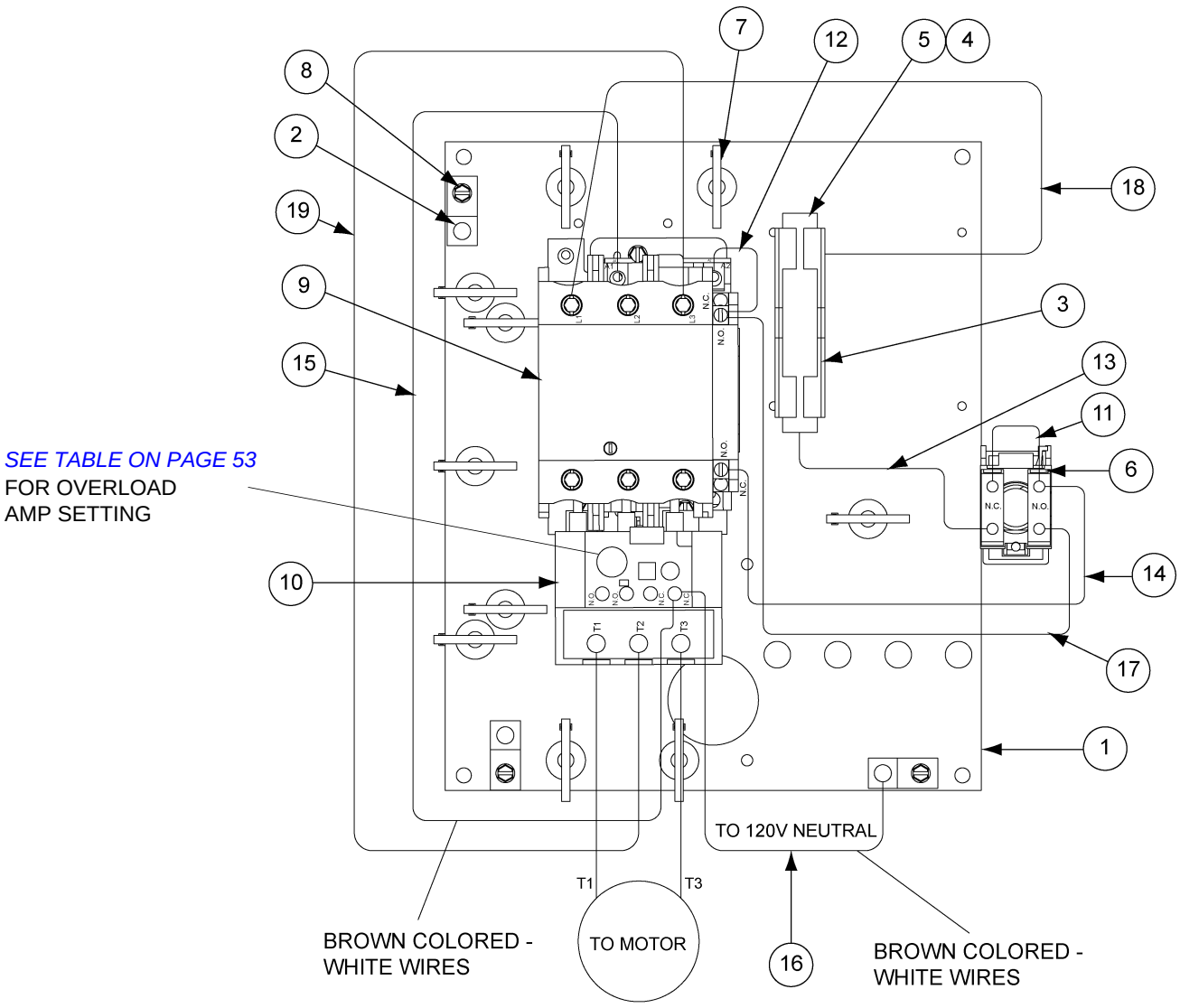

SEE TABLE ON PAGE 53
FOR OVERLOAD
AMP SETTING

NOTE: *C-8719 is installed in C-8715. Attach extra C-8719 to backing plate with D02-0039.*

Small Control Panel 1 Phase 230 Volt (CPS-230-1) Parts List

Ref #	Part #	Description	Qty
1	C-8707	Control Box Backing Plate - C-8705	1
2	E160-1137	Lug Ground, #TA-2 (CSA)	3
3	C-8718	Single Pole Midget Fuse Block	1
4	C-8719	Slow Blow 2A Midget Fuse 500 VAC, 10 KA I.R.	1
5	C-8715	1-1/2" x 13/32" Fuse Puller	1
6	C-8716	P.B. Switch Green FL, Red Ext w/ ISO Symbol IP66 NEMA 4	1
7	C-8717	Push Mount Cable Tie Assembly	10
8	S-8472	Screw, TCSF #8-32 x 3/8" HWH ZN	7
9	*See Table below*	Contactor	1
10	*See Table below*	Overload Relay IEC	1
11	CH-9029	3" Wire 16 Black, Ferrule, Ferrule	1
12	CH-9025	8" Wire 16 Purple, Ferrule, Ferrule	1
13	CH-9035	6" Wire 16 Black, Ferrule, Ferrule	1
14	CH-9031	18" Wire 16 Blue, Ferrule, Ferrule	1
15	CH-9026	24" Wire 16 White, Ferrule, Ferrule	1
16	CH-9038	11" Wire 16 White, Ferrule, Ferrule	1
17	CH-9032	34" Wire 16 Purple, Ferrule, Ferrule	1
18	CH-9037	12" Wire 16 Orange, Fork, Ferrule	1
19	CH-9036	12" Wire 10 Red, Ferrule, Ferrule	1

Model	Contactor (Ref #9)	Overload (Ref #10)	Overload Amps	Contactor Torque (lb-in) Power, Control	Overload Torque (lb-in) Power, Control
CP-03-1	056-1941-6	056-1944-0	16	20, 15	15
CP-05-1	056-2078-7	CH-1070	23	70, 8	70, 15
CP-07-1	056-1994-6	CH-1073	30	70, 8	70, 15
CP-10-1	056-2030-7	CH-1059	38	100, 10	70, 10
CP-15-1	056-2030-7	CH-1060	64	100, 10	70, 10

Small Control Panel 3 Phase 230 Volt (CPS-230-3)

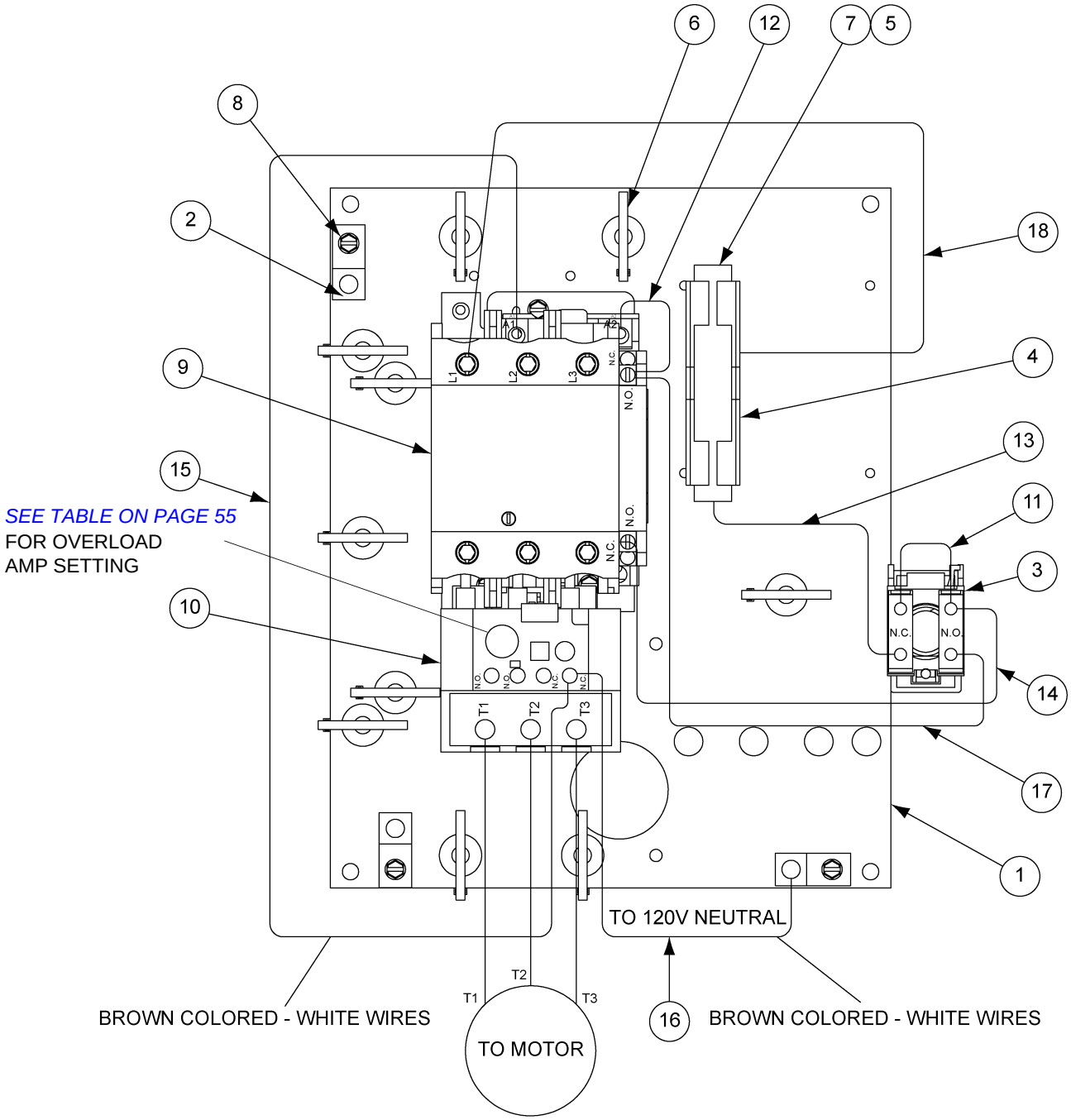

NOTE: *C-8719 is installed in C-8715. Attach extra C-8719 to backing plate with D02-0039.*

Small Control Panel 3 Phase 230 Volt (CPS-230-3) Parts List

Ref #	Part #	Description	Qty
1	C-8707	Control Box Backing Plate - C-8705	1
2	E160-1137	Lug Ground, #TA-2 (CSA)	3
3	C-8716	P.B. Switch Green FL, Red Ext w/ ISO Symbol IP66 NEMA 4	1
4	C-8718	Single Pole Midget Fuse Block	1
5	C-8719	Slow Blow 2A Midget Fuse 500 VAC, 10 KA I.R.	1
6	C-8717	Push Mount Cable Tie Assembly	10
7	C-8715	1-1/2" x 13/32" Fuse Puller	1
8	S-8472	Screw, TCSF #8-32 x 3/8" HWH ZN	7
9	*See Table below*	Contactor	1
10	*See Table below*	Overload Relay IEC	1
11	CH-9029	3" Wire 16 Black, Ferrule, Ferrule	1
12	CH-9025	8" Wire 16 Purple, Ferrule, Ferrule	1
13	CH-9035	6" Wire 16 Black, Ferrule, Ferrule	1
14	CH-9031	18" Wire 16 Blue, Ferrule, Ferrule	1
15	CH-9026	24" Wire 16 White, Ferrule, Ferrule	1
16	CH-9038	11" Wire 16 White, Ferrule, Ferrule	1
17	CH-9032	34" Wire 16 Purple, Ferrule, Ferrule	1
18	CH-9037	12" Wire 16 Orange, Fork, Ferrule	1

Model	Contactor (Ref #9)	Overload (Ref #10)	Overload Amps	Contactor Torque (lb-in) Power, Control	Overload Torque (lb-in) Power, Control
CP-03-3	056-1949-9	056-2022-4	8	15	15
CP-05-3	056-1969-7	056-1944-0	13	20, 15	15
CP-07-3	056-2078-7	CH-1068	20	70, 8	70, 15
CP-10-3	056-2078-7	CH-1071	26	70, 8	70, 15
CP-15-3	056-2030-7	CH-1059	38	70, 8	70, 15
CP-20-3	056-2030-7	CH-1060	50	100, 10	75, 10
CP-25-3	056-2030-7	CH-1061	58	100, 10	75, 10

Large Control Panel 3 Phase 230 Volt (CPL-230-3)

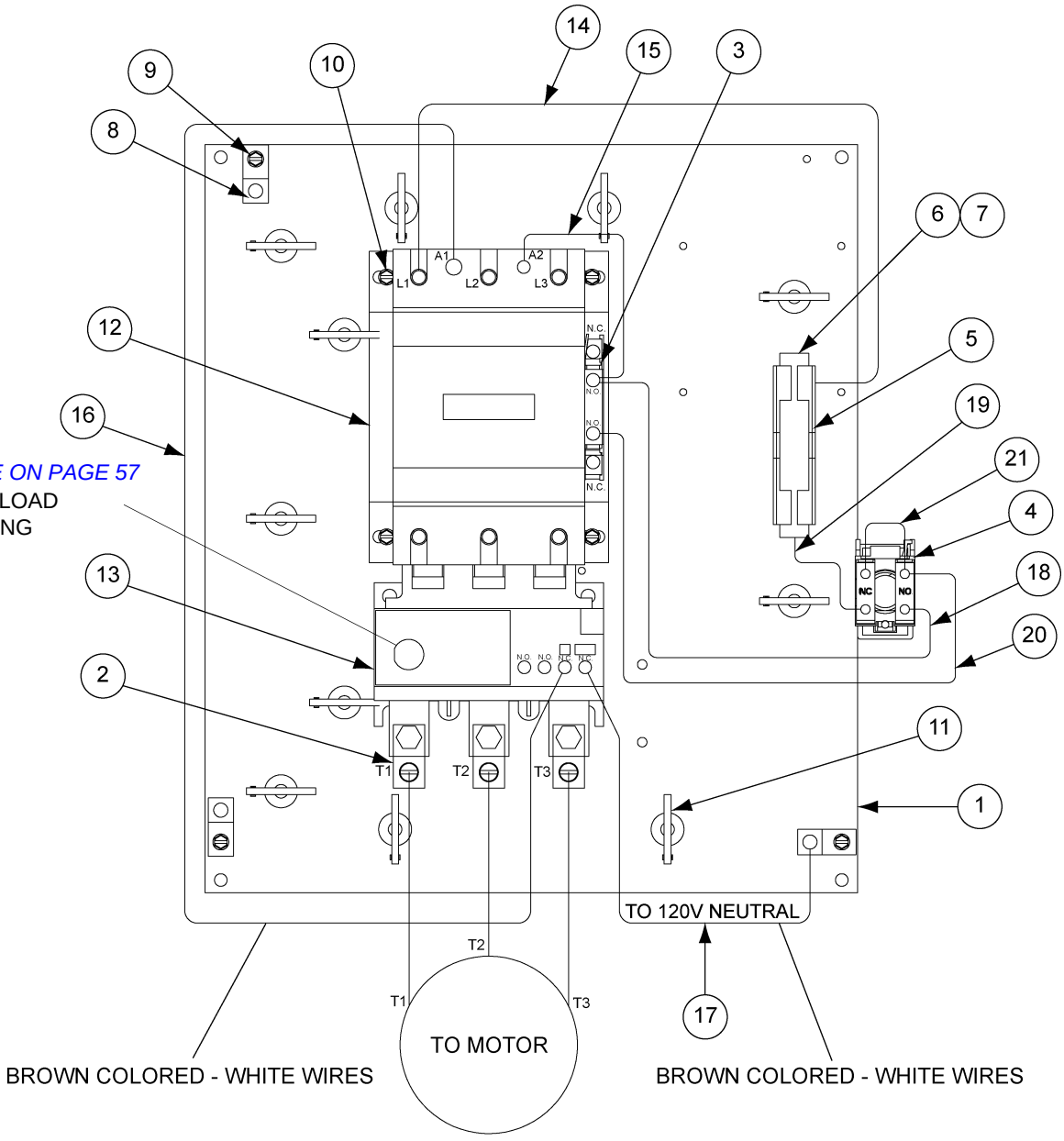

NOTE: *C-8719 is installed in C-8715.*

1. 056-2110-7 Comes on the contactor.
2. Attach extra C-8719 to backing plate with D02-0039.

Large Control Panel 3 Phase 230 Volt (CPL-230-3) Parts List

Ref #	Part #	Description	Qty
1	C-8708	Large Control Box Backing Plate	1
2	056-2072-9	Lug for 150A Contactor	3
3	056-2110-7	Contact, 2 N.O. Side Mount I	1
4	C-8716	P.B. Switch Green FL, Red Ext w/ ISO Symbol IP66 NEMA 4	1
5	C-8718	Single Pole Midget Fuse Block	1
6	C-8715	1-1/2" x 13/32" Fuse Puller	1
7	C-8719	Slow Blow 2A Midget Fuse 500 VAC, 10 KA I.R.	1
8	E160-1137	Lug Ground, #TA-2 (CSA)	3
9	S-8472	Screw, TCSF #8-32 x 3/8" HWH ZN	4
10	S-8977	Screw, TCSF #10-32 x 3/4" HWH ZN	4
11	C-8717	Push Mount Cable Tie Assembly	11
12	*See Table below*	Contactor	1
13	*See Table below*	Overload Relay IEC	1
14	CH-9024	15" Wire 16 Orange, Fork, Ferrule	1
15	CH-9025	8" Wire 16 Purple, Ferrule, Ferrule	1
16	CH-9039	30" Wire 16 White, Ferrule, Ferrule	1
17	CH-9038	11" Wire 16 White, Ferrule, Ferrule	1
18	CH-9043	42" Wire 16 Purple, Ferrule, Ferrule	1
19	CH-9042	42" Wire 16 Black, Ferrule, Ferrule	1
20	CH-9031	18" Wire 16 Blue, Ferrule, Ferrule	1
21	CH-9029	3" Wire 16 Black, Ferrule, Ferrule	1

Model	Contactor (Ref #9)	Overload (Ref #10)	Overload Amps	Contactor Torque (lb-in) Power, Control	Overload Torque (lb-in) Power, Control
CP-30-3	056-2030-7	CH-1062	72	100, 10	75, 10
CP-40-3	056-2275-8	056-2276-6	94	100, 10	100, 15
CP-50-3	056-2275-8	056-2276-6	120	100, 10	100, 15

Small Control Panel 3 Phase 380V, 460V and 575V (CPS-345-3)

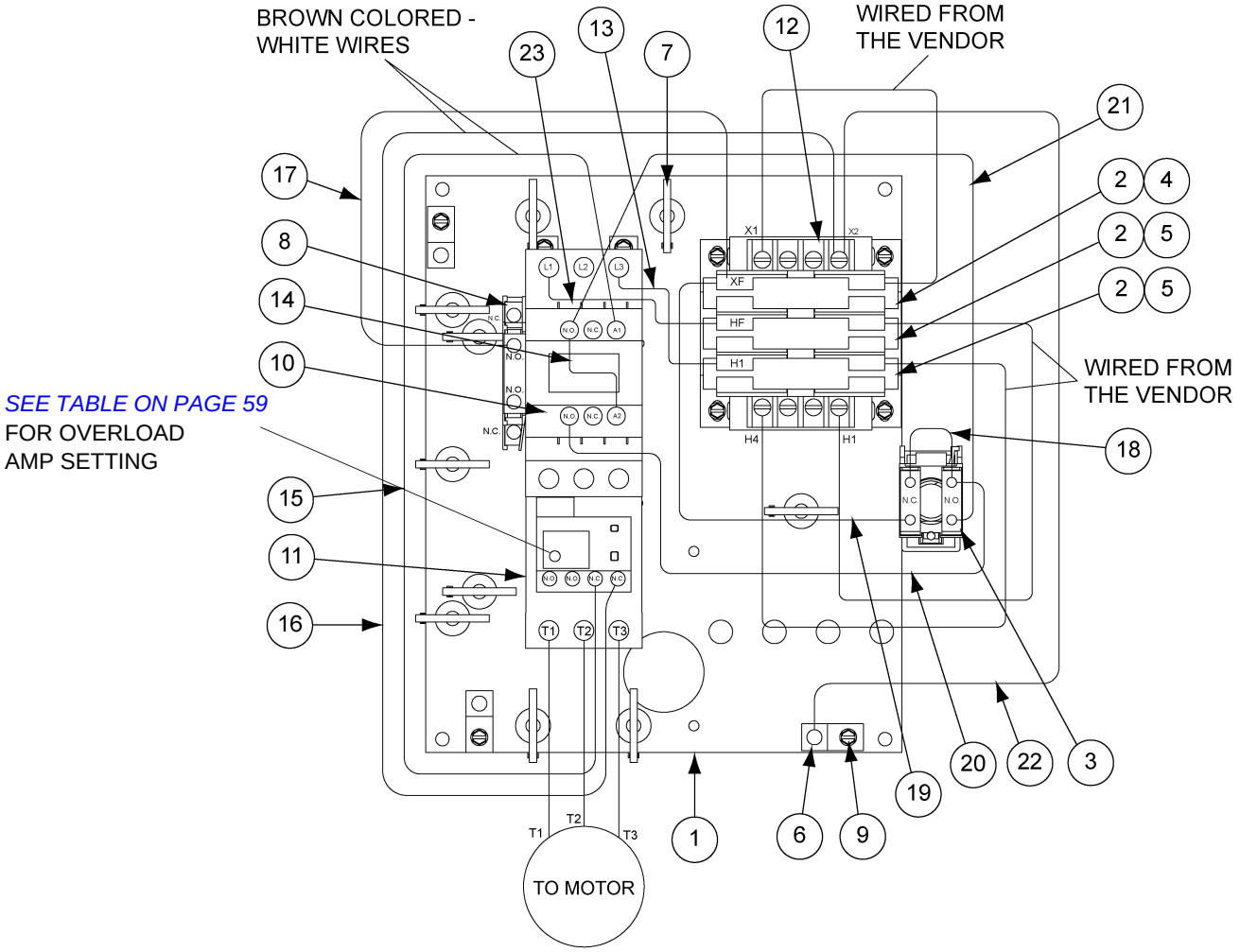

NOTE: *C-8719 and C-8720 is installed in C-8715.*

1. C-8714 is installed on high voltage side of the transformer (H1 and H4).
2. C-8720 is placed in location H1 and HF on transformer.
3. C-8719 is placed in location XF on transformer.
4. Attach extra C-8719 to backing plate with D02-0039.

Small Control Panel 3 Phase 380V, 460V and 575V (CPS-345-3) Parts List

Ref #	Part #	Description	Qty
1	C-8707	Control Box Backing Plate - C-8705	1
2	C-8715	1-1/2" x 13/32" Fuse Puller	3
3	C-8716	P.B. Switch Green FL, Red Ext w/ ISO Symbol IP66 NEMA 4	1
4	C-8719	Slow Blow 2A Midget Fuse 500 VAC, 10 KA I.R.	1
5	C-8720	Slow Blow Class CC Fuse ATQR8/10	2
6	E160-1137	Lug Ground, #TA-2 (CSA)	3
7	C-8717	Push Mount Cable Tie Assembly	10
8	056-2110-7	Contact 2 N.O. Side Mount I	1
9	S-8472	Screw, TCSF #8-32 x 3/8" HWH ZN	10
10	*See Table below*	Contactor	1
11	*See Table below*	Overload Relay IEC	1
12	*See Table below*	Transformer	1
13	CH-9037	12" Wire 16 Orange, Fork, Ferrule	1
14	CH-9025	8" Wire 16 Purple, Ferrule, Ferrule	1
15	CH-9026	24" Wire 16 White, Ferrule, Ferrule	1
16	CH-9027	32" Wire, 16 White, Fork, Ferrule	1
17	CH-9028	12" Wire 16 Purple, Ferrule, Ferrule	1
18	CH-9029	3" Wire 16 Black, Ferrule, Ferrule	1
19	CH-9030	34" Wire 16 Black, Ferrule, Ferrule	1
20	CH-9031	18" Wire 16 Blue, Ferrule, Ferrule	1
21	CH-9032	34" Wire 16 Purple, Ferrule, Ferrule	1
22	CH-9033	28" Wire 10 Green/Yellow, Fork, Ferrule	1
23	CH-9024	15" Wire 16 Orange, Fork, Ferrule	1

Model	Contactor (Ref #10)	Overload (Ref #11)	Overload Amps	Contactor Torque (lb-in) Power, Control	Overload Torque (lb-in) Power, Control	Transformer (Ref #12)
CP-03-4	056-1948-1	CH-1053	4	15	15	C-8711
CP-03-5	056-1948-1	CH-1052	3	15	15	C-8712
CP-03-6	056-1949-9	CH-1053	5	15	15	C-8713
CP-05-4	056-1949-9	CH-1054	7	15	15	C-8711
CP-05-5	056-1949-9	CH-1054	6	15	15	C-8712
CP-05-6	056-1969-7	CH-1054	8	20, 15	15	C-8713
CP-07-4	056-1949-9	056-1971-3	10	15	15	C-8711
CP-07-5	056-1942-4	056-2022-4	8	15	15	C-8712
CP-07-6	056-1941-6	056-1944-0	12	20	15	C-8713
CP-10-4	056-1969-7	056-1944-0	13	20, 15	15	C-8711
CP-10-5	056-1969-7	056-1971-3	11	20, 15	15	C-8712
CP-10-6	056-2078-7	CH-1070	16	70, 8	70, 15	C-8713
CP-15-4	056-2078-7	CH-1070	19	70, 8	70, 15	C-8711
CP-15-5	056-1969-7	056-1944-0	15	20, 15	15	C-8712
CP-15-6	056-1994-6	CH-1070	23	70, 8	70, 15	C-8713
CP-20-4	056-2111-6	CH-1071	25	70, 8	70, 15	C-8711
CP-20-5	056-2078-7	CH-1070	20	70, 8	70, 15	C-8712
CP-20-6	056-2030-7	CH-1058	29	100, 10	70, 10	C-8713
CP-25-4	056-2078-7	CH-1071	29	70, 8	70, 15	C-8711
CP-25-5	056-2078-7	CH-1071	23	70, 8	70, 15	C-8712

Large Control Panel 3 Phase 460V and 575V (CPL-345-3)

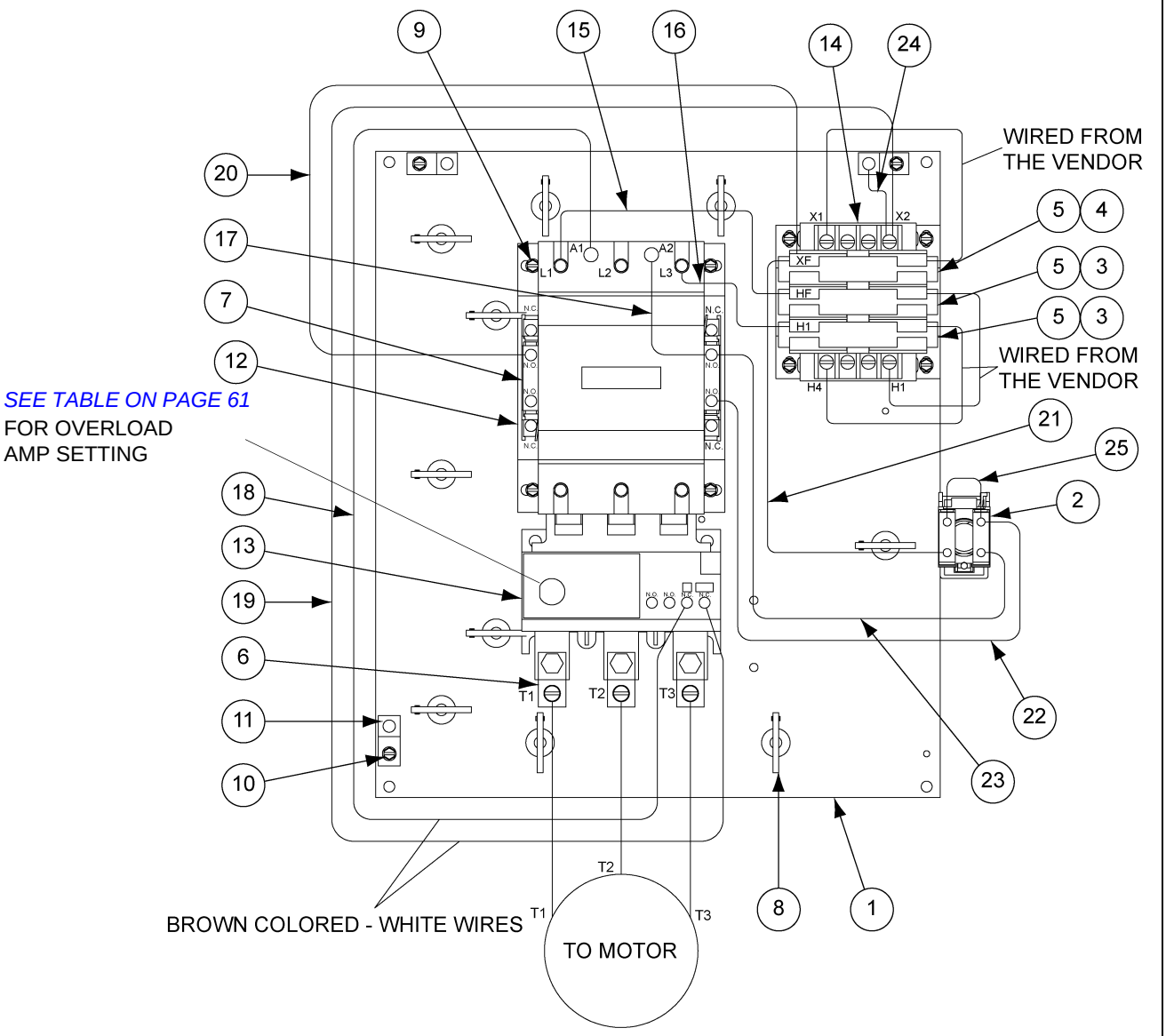

NOTE: *C-8719 and C-8720 is installed in C-8715.*

1. C-8714 is installed on high voltage side of the transformer (H1 and H4).
2. C-8720 is placed in location H1 and HF on transformer.
3. C-8719 is placed in location XF on transformer.
4. Attach extra C-8719 to backing plate with D02-0039.

Large Control Panel 3 Phase 460V and 575V (CPL-345-3) Parts List

Ref #	Part #	Description	Qty
1	C-8708	Large Control Box Backing Plate	1
2	C-8716	P.B. Switch Green FL, Red Ext w/ ISO Symbol IP66 NEMA 4	1
3	C-8720	Slow Blow Class CC Fuse ATQR8/10	2
4	C-8719	Slow Blow 2A Midget Fuse 500 VAC, 10 KA I.R.	1
5	C-8715	1-1/2" x 13/32" Fuse Puller	3
6	056-2072-9	Lug for 150A Contactor	3
7	056-2110-7	Contact, 2 N.O. Side Mount I	2
8	C-8717	Push Mount Cable Tie Assembly	10
9	S-8977	Screw, TCSF #10-32 x 3/4" HWH ZN	4
10	S-8472	Screw, TCSF #10-32 x 3/8" HWH ZN	7
11	E160-1137	Lug Ground, #TA-2 (CSA)	3
12	*See Table below*	Contactor	1
13	*See Table below*	Overload Relay IEC	1
14	*See Table below*	Transformer	1
15	CH-9024	15" Wire 16 Orange, Fork, Ferrule	1
16	CH-9037	12" Wire 16 Orange, Fork, Ferrule	1
17	CH-9025	8" Wire 16 Purple, Ferrule, Ferrule	1
18	CH-9039	30" Wire 16 White, Ferrule, Ferrule	1
19	CH-9040	38" Wire 16 White, Fork, Ferrule	1
20	CH-9045	16" Wire 16 Purple, Ferrule, Ferrule	1
21	CH-9035	6" Wire 16 Black, Ferrule, Ferrule	1
22	CH-9031	18" Wire 16 Blue, Ferrule, Ferrule	1
23	CH-9043	42" Wire 16 Purple, Ferrule, Ferrule	1
24	CH-9044	6" Wire 10 Green/Yellow, Fork, Ferrule	1
25	CH-9029	3" Wire 16 Black, Ferrule, Ferrule	1

Model	Contactor (Ref #12)	Overload (Ref #13)	Overload Amps	Contactor Torque (lb-in) Power, Control	Overload Torque (lb-in) Power, Control	Transformer (Ref #14)
CP-30-4	056-2078-7	CH-1073	36	70, 8	70, 15	C-8711
CP-30-5	056-2030-7	CH-1058	29	100, 10	75, 10	C-8712
CP-30-6	056-2030-7	CH-1059	39	100, 10	75, 10	C-8713
CP-40-4	056-2030-7	CH-1059	47	100, 10	75, 10	C-8711
CP-40-5	056-2030-7	CH-1059	38	100, 10	75, 10	C-8712
CP-40-6	056-2030-7	CH-1059	58	100, 10	75, 10	C-8713
CP-50-4	056-2030-7	CH-1061	60	100, 10	75, 10	C-8711
CP-50-5	056-2030-7	CH-1059	47	100, 10	75, 10	C-8712

Motor Conduit Assembly

Motor Conduit Assembly				
Fan Model	Conduit Assembly			
	1P 230V	3P 230V	3P 460V	3P 575V
CF-3	C-8236	C-8236	C-8236	C-8236
CF-5	C-8236	C-8236	C-8236	C-8568
CF-7.5	C-8236	C-8236	C-8236	C-8236
CF-10	C-8240	C-8236	C-8236	C-8240
CF-15	C-8240	C-8240	C-8240	C-8656
CF-20	-	C-8240	C-8240	C-8240
CF-25	-	C-8239	C-8239	C-8239
CF-30	-	C-8239	C-8239	C-8239
CF-40	-	C-8239	C-8239	C-8239
CF-50	-	C-8239	C-8239	C-8239

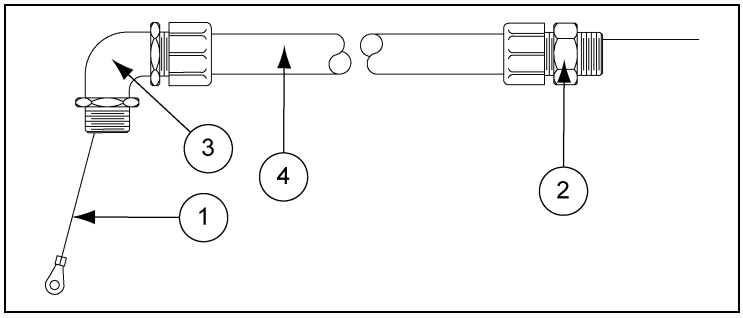

C-8236 - Conduit Assembly 3/4" x 31" Str/Elbow				
Ref #	Part #	Description	Qty	U/M
1	067-1044-6	Connector Sealtite STR 3/4"	1	EA
2	E305-0160	WR 46" (10 Green/Yellow) 1/4/Ring Term	1	EA
3	FH-6563	Sealtite 3/4" CSA Approved	2.5833	FT
4	TFC-0054	Elbow 3/4" Sealtite CSA	1	EA

C-8665 - Conduit Assembly 1-1/4" x 31" Str/Elbow				
Ref #	Part #	Description	Qty	U/M
1	006-1187-1	Connector - 1-1/4" Elec 90° Seal	1	EA
2	E305-0160	WR 46" (10 Green/Yellow) 1/4/Ring Term	1	EA
3	FH-6565	Sealtite 1-1/4" CSA Approved	2.5833	FT
4	GT3-0151	Connector Sealtite STR 1-1/4"	1	EA

C-8239 Conduit Assembly 1-1/2" x 24" Str/Elbow, W				
Ref #	Part #	Description	Qty	U/M
1	006-1092-3	Connector Sealtite 90° 1-1/2"	1	EA
2	E305-0160	WR 46" (10 Green/Yellow) 1/4/Ring Term	1	EA
3	GT3-0353	Sealtite 1-1/2"	2	FT
4	GT3-0354	Connector Sealtite STR 1-1/2"	1	EA

C-8301 Conduit Assembly 2" x 24" Str/Elbow, W				
Ref #	Part #	Description	Qty	U/M
1	E305-0160	WR 46" (10 Green/Yellow) 1/4/Ring Term	1	EA
2	GT3-0274	Sealtite 2"	2	FT
3	GT3-0275	Connector Sealtite 90° 2"	1	EA
4	GT3-0331	Connector Sealtite STR 2"	1	EA

Motor Conduit Assembly (Continued)

Motor Conduit Assembly				
Fan Model	Conduit Assembly			
	1P 230V	3P 230V	3P 460V	3P 575V
CHS-3	C-8267	C-8265	C-8568	C-8568
CHS-5	C-8264	C-8265	C-8568	C-8568
CHS-7.5	C-8264	C-8569	C-8568	C-8568
CHS-10	C-8266	C-8569	C-8568	C-8568
CHS-15	-	C-8272	C-8571	C-8571
CHS-20	-	C-8572	C-8572	C-8572
CHS-30	-	C-8309	C-8310	C-8310
CHS-40	-	C-8311	C-8310	C-8311
CHS-50	-	C-8311	C-8312	C-8311

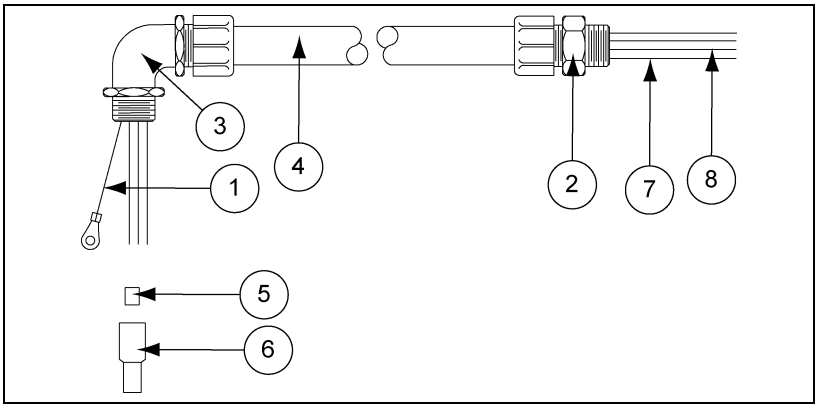

C-8264 - Conduit Assembly 3/4" x 36" Str/Elbow 8				
Ref #	Part #	Description	Qty	U/M
1	067-1044-6	Connector Sealtite STR 3/4"	1	EA
2	C-7213	Tape 3/4 x 66' 3M Plastic	0.054	RL
3	C-7214	Tape Rubber Wrap 3/4 x 30'	0.066	RL
4	E305-0153	WR 48" (10 Green/Yellow) 1/4/Ring Term	1	EA
5	FH-6563	Sealtite 3/4" CSA Approved	3	FT
6	FH-6996	Wire Crimp #2011S Buchanan	2	EA
7	FH-6997	Insulator #417 Ideal	2	EA
8	TFC-0054	Elbow 3/4" Sealtite CSA	1	EA
9	WR-08BK	Wire 8 Gauge Stranded THNN Black	4	FT
10	WR-08RD	Wire 8 Gauge Stranded THNN Red	4	FT

C-8266 Conduit Assembly 3/4" x 36" Str/Elbow 6				
Ref #	Part #	Description	Qty	U/M
1	067-1044-6	Connector Sealtite STR 3/4"	1	EA
2	C-7213	Tape 3/4 x 66' 3M Plastic	0.135	RL
3	C-7214	Tape Rubber Wrap 3/4 x 30'	0.066	RL
4	E305-0153	WR 48" (10 Green/Yellow) 1/4/Ring Term	1	EA
5	FH-6563	Sealtite 3/4" CSA Approved	3	FT
6	FH-6996	Wire Crimp #2011S Buchanan	2	EA
7	FH-6997	Insulator #417 Ideal	2	EA
8	TFC-0054	Elbow 3/4" Sealtite CSA	1	EA
9	WR-06BK	Wire 6 AWG Black, 600V, Type M	4	FT
10	WR-06RD	Wire 6 Gauge Red	4	FT

C-8267 Conduit Assembly 3/4" x 36" Str/Elbow 1				
Ref #	Part #	Description	Qty	U/M
1	067-1044-6	Connector Sealtite STR 3/4"	1	EA
2	C-7213	Tape 3/4 x 66' 3M Plastic	0.135	RL
3	E305-0153	WR 48" (10 Green/Yellow) 1/4/Ring Term	1	EA
4	E305-0163	WR 48" (12 Black) 1/2/1/2	1	EA
5	E305-0164	WR 48" (12 Red) 1/2/1/2	1	EA
6	FH-6563	Sealtite 3/4" CSA Approved	3	FT
7	FH-6999	Insulator 16 Gauge Insul. Crimp	2	EA
8	TFC-0054	Elbow 3/4" Sealtite CSA	1	EA

Motor Conduit Assembly (Continued)

Motor Conduit Assembly				
Fan Model	Conduit Assembly			
	1P 230V	3P 230V	3P 460V	3P 575V
CHS-3	C-8267	C-8265	C-8568	C-8568
CHS-5	C-8264	C-8265	C-8568	C-8568
CHS-7.5	C-8264	C-8569	C-8568	C-8568
CHS-10	C-8266	C-8569	C-8568	C-8568
CHS-15	-	C-8272	C-8571	C-8571
CHS-20	-	C-8572	C-8572	C-8572
CHS-30	-	C-8309	C-8310	C-8310
CHS-40	-	C-8311	C-8310	C-8311
CHS-50	-	C-8311	C-8312	C-8311

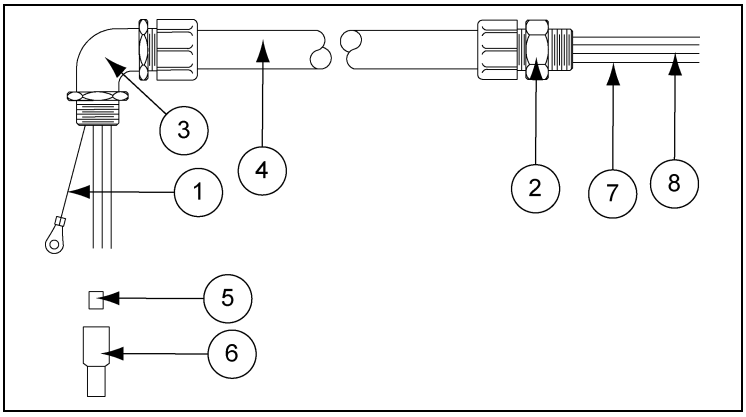

C-8265 - Conduit Assembly 3/4" x 36" Str/Elbow 1				
Ref #	Part #	Description	Qty	U/M
1	067-1044-6	Connector Sealtite STR 3/4"	1	EA
2	E305-0153	WR 48" (10 Green/Yellow) 1/4/Ring Term	1	EA
3	FH-6510	Washer Reducing 1"-3/4" Electr	2	EA
4	FH-6563	Sealtite 3/4" CSA Approved	3	FT
5	FH-6999	Insulator 16 Gauge Insul. Crimp	4	EA
6	TFC-0054	Elbow 3/4" Sealtite CSA	1	EA
7	WR-14BK	Wire 14 Gauge Stranded MTW Black	8	FT
8	WR-14RD	Wire 14 Gauge Stranded MTW Red	4	FT

C-8569- Conduit Assembly 3/4" x 36" Str/Elbow 1				
Ref #	Part #	Description	Qty	U/M
1	067-1044-6	Connector Sealtite STR 3/4"	1	EA
2	C-7213	Tape 3/4 x 66' 3M Plastic	0.1818	RL
3	C-7214	Tape Rubber Wrap 3/4 x 30'	0.1333	RL
4	E305-0153	WR 48" (10 Green/Yellow) 1/4/Ring Term	1	EA
5	FH-6563	Sealtite 3/4" CSA Approved	3	FT
6	FH-6996	Wire Crimp #2011S Buchanan	4	EA
7	FH-6997	Insulator #417 Ideal	4	EA
8	TFC-0054	Elbow 3/4" Sealtite CSA	1	EA
9	WR-10BK	Wire 10 Gauge Stranded MTW Black	8	FT
10	WR-10RD	Wire 10 Gauge Stranded MTW Red	4	FT

C-8272 - Conduit Assembly 1" x 60" Str/Elbow 6 Gauge				
Ref #	Part #	Description	Qty	U/M
1	C-7213	Tape 3/4 x 66' 3M Plastic	0.1818	RL
2	C-7214	Tape Rubber Wrap 3/4 x 30'	0.1999	RL
3	E305-0267	WR 78" (10 Green/Yellow) 1/4/Ring Term	1	EA
4	FH-6564	Sealtite 1" CSA Approved	5	FT
5	FH-6996	Wire Crimp #2011S Buchanan	6	EA
6	FH-6997	Insulator #417 Ideal	6	EA
7	GT3-0461	Connector Sealtite STR 1"	1	EA
8	TFH-2029	Sealtite, 1" 90° Fitting	1	EA
9	WR-06BK	Wire 6 AWG Black, 600V, Type M	12	FT
10	WR-06RD	Wire 6 Gauge Red	6	FT

C-8309 - Conduit Assembly 1-1/2" x 60" Str/Elbow 2				
Ref #	Part #	Description	Qty	U/M
1	006-1092-3	Connector Sealtite 90° 1-1/2"	1	EA
2	C-7215-A	GRP - Splice Bolt 2H Blackburn	3	EA
3	E305-0267	WR 78" (10 Green/Yellow) 1/4/Ring Term	1	EA
4	GT3-0353	Sealtite 1-1/2"	5	FT
5	GT3-0354	Connector Sealtite STR 1-1/2"	1	EA
6	WR-02BK	Wire 2 Gauge Black Wire	13	FT
7	WR-02RD	Wire 2 Gauge Red Wire	6.5	FT

Motor Conduit Assembly (Continued)

C-8310 - Conduit Assembly 1-1/2" x 60" Str/Elbow 6				
Ref #	Part #	Description	Qty	U/M
1	006-1092-3	Connector Sealtite 90° 1-1/2"	1	EA
2	C-7213	Tape 3/4 x 66' 3M Plastic	0.2727	RL
3	C-7214	Tape Rubber Wrap 3/4 x 30'	0.1999	RL
4	E305-0267	WR 78" (10 Green/Yellow) 1/4/Ring Term	1	EA
5	FH-6996	Wire Crimp #2011S Buchanan	6	EA
6	FH-6997	Insulator #417 Ideal	6	EA
7	GT3-0353	Sealtite 1-1/2"	5	FT
8	GT3-0354	Connector Sealtite STR 1-1/2"	1	EA
9	WR-06BK	Wire 6 AWG Black, 600V, Type M	13	FT
10	WR-06RD	Wire 6 Gauge Red	6.5	FT

C-8311 - Conduit Assembly 2" x 60" Str/Elbow 1 Gauge				
Ref #	Part #	Description	Qty	U/M
1	C-7218-A	GRP - Splice Bolt 1H3 Blackburn	3	EA
2	E305-0267	WR 78" (10 Green/Yellow) 1/4/Ring Term	1	EA
3	GT3-0274	Sealtite 2"	5	FT
4	GT3-0275	Connector Sealtite 90° 2"	1	EA
5	GT3-0331	Connector Sealtite STR 2"	1	EA
6	WR-01BK	Wire 1 Gauge Black Stranded CSA	19.5	FT

C-8312 - Conduit Assembly 2" x 60" Str/Elbow 4 Gauge				
Ref #	Part #	Description	Qty	U/M
1	C-7215-A	GRP - Splice Bolt 2H Blackburn	3	EA
2	E305-0267	WR 78" (10 Green/Yellow) 1/4/Ring Term	1	EA
3	FH-6996	Wire Crimp #2011S Buchanan	3	EA
4	FH-6997	Insulator #417 Ideal	3	EA
5	GT3-0274	Sealtite 2"	5	FT
6	GT3-0275	Connector Sealtite 90° 2"	1	EA
7	GT3-0331	Connector Sealtite STR 2"	1	EA
8	WR-04BK	Wire 4 Gauge MTW Black	13	FT
9	WR-04RD	Wire 4 Gauge Red Wire	6.5	FT

Motor Conduit Assembly (Continued)

Motor Conduit Assembly			
Fan Model	Conduit Assembly		
	1P 230V	3P 230V	3P 460V
CF-30D	-	C-8439	C-8440
CF-40D	-	C-8450	C-8438
CF-50D	-	C-8450	C-8436

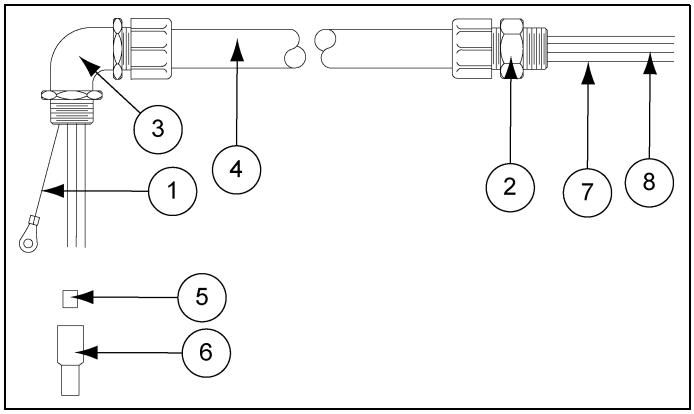

C-8572 - Conduit Assembly 1" x 60" Str/Elbow 12 Gauge				
Ref #	Part #	Description	Qty	U/M
1	C-7213	Tape 3/4 x 66' 3M Plastic	0.1818	RL
2	C-7214	Tape Rubber Wrap 3/4 x 30'	0.133	RL
3	E305-0267	WR 78" (10 Green/Yellow) 1/4/Ring Term	1	EA
4	FH-6564	Sealtite 1" CSA Approved	5	FT
5	FH-6997	Insulator #417 Ideal	4	EA
6	FH-6999	Insulator 16 Gauge Insul. Crimp	6	EA
7	GT3-0461	Connector Sealtite STR 1"	1	EA
8	TFH-2029	Sealtite, 1" 90° Fitting	1	EA
9	WR-12BK	Wire 12 Gauge Stranded MTW Black	24	FT
10	WR-12RD	Wire 12 Gauge Stranded MTW Red	12	FT

C-8568 - Conduit Assembly 3/4" x 36" Str/Elbow 1				
Ref #	Part #	Description	Qty	U/M
1	067-1044-6	Connector Sealtite STR 3/4"	1	EA
2	E305-0153	WR 48" (10 Green/Yellow) 1/4/Ring Term	1	EA
3	FH-6563	Sealtite 3/4" CSA Approved	3	FT
4	FH-6999	Insulator 16 Gauge Insul. Crimp	6	EA
5	TFC-0054	Elbow 3/4" Sealtite CSA	1	EA
7	WR-14BK	Wire 14 Gauge Stranded MTW Black	8	FT
8	WR-14RD	Wire 14 Gauge Stranded MTW Red	4	FT

C-8571- Conduit Assembly 3/4" x 60" Str/Elbow 1				
Ref #	Part #	Description	Qty	U/M
1	067-1044-6	Connector Sealtite STR 3/4"	1	EA
2	C-7213	Tape 3/4 x 66' 3M Plastic	0.2727	RL
3	C-7214	Tape Rubber Wrap 3/4 x 30'	0.1999	RL
4	E305-0188	WR 60" (10 Green/Yellow) 1/4/Ring Term	1	EA
5	FH-6563	Sealtite 3/4" CSA approved	5	FT
6	FH-6996	Wire Crimp #2011S Buchanan	6	EA
7	FH-6997	Insulator #417 Ideal	6	EA
8	TFC-0054	Elbow 3/4" Sealtite CSA	1	EA
9	WR-10BK	Wire 10 Gauge Stranded MTW Black	12	FT
10	WR-10RD	Wire 10 Gauge Stranded MTW Red	6	FT

C-8439 - GRP-DI Conduit 3P230 #2 1-1/2 x 48				
Ref #	Part #	Description	Qty	U/M
1	006-1092-3	Connector Sealtite 90° 1-1/2"	1	EA
2	C-7218-A	GRP - Splice Bolt 1H3 Blackburn	4	EA
3	E305-0188	WR 60" (10 Green/Yellow) 1/4/Ring Term	1	EA
4	FH-6997	Insulator #417 Ideal	4	EA
5	GT3-0353	Sealtite 1-1/2"	3	FT
6	GT3-0354	Connector Sealtite STR 1-1/2"	1	EA
7	WR-02BK	Wire 2 Gauge Black Wire	10	FT
8	WR-02RD	Wire 2 Gauge Red Wire	5	FT

Motor Conduit Assembly (Continued)

C-8450 - GRP-DI Conduit 3P230 #1 2 x 48				
Ref #	Part #	Description	Qty	U/M
1	C-7218-A	GRP-Splice Bolt 1H3 Blackburn	3	EA
2	E305-0188	WR 60" (10 Green/Yellow) 1/4/Ring Term	1	EA
3	GT3-0274	Sealtite 2"	4	FT
4	GT3-0275	Connector Sealtite 90° 2"	1	EA
5	GT3-0331	Connector Sealtite STR 2"	1	EA
6	WR-01BK	Wire 1 Gauge Black Stranded CSA	15	FT

C-8440 - GRP-DI Conduit 3P460 #6 1-1/2 x 48				
Ref #	Part #	Description	Qty	U/M
1	006-1092-3	Connector Sealtite 90° 1-1/2"	1	EA
2	C-7213	Tape 3/4 x 66' 3M plastic	0.2727	RL
3	C-7214	Tape Rubber Wrap 3/4 x 30'	0.1999	RL
4	E305-0188	WR 60" (10 Green/Yellow) 1/4/Ring Term	1	EA
5	FH-6996	Wire Crimp #2011S Buchanan	6	EA
6	FH-6997	Insulator #417 Ideal	6	EA
7	GT3-0353	Sealtite 1-1/2"	3	FT
8	GT3-0354	Connector Sealtite STR 1-1/2"	1	EA
9	WR-06BK	Wire 6 AWG Black, 600V, Type M	10	FT
10	WR-06RD	Wire 6 Gauge Red	5	FT

C-8438 - GRP-DI Conduit 3P460 #6 2 x 48				
Ref #	Part #	Description	Qty	U/M
1	C-7213	Tape 3/4 x 66' 3M Plastic	0.2727	RL
2	C-7214	Tape Rubber Wrap 3/4 x 30'	0.1999	RL
3	E305-0188	WR 60" (10 Green/Yellow) 1/4/Ring Term	1	EA
4	FH-6996	Wire Crimp #2011S Buchanan	6	EA
5	FH-6997	Insulator #417 Ideal	6	EA
6	GT3-0274	Sealtite 2"	4	FT
7	GT3-0275	Connector Sealtite 90° 2"	1	EA
8	GT3-0331	Connector Sealtite STR 2"	1	EA
9	WR-06BK	Wire 6 AWG Black, 600V, Type M	10	FT
10	WR-06RD	Wire 6 Gauge Red	5	FT

C-8436 - GRP-DI CONDUIT 3P230 #2 2 x 48				
Ref #	Part #	Description	Qty	U/M
1	C-7215-A	GRP-Splice Bolt 2H Blackburn	3	EA
2	E305-0188	WR 60" (10 Green/Yellow) 1/4/Ring Term	1	EA
3	FH-6996	Wire Crimp #2011S Buchanan	3	EA
4	FH-6997	Insulator #417 Ideal	3	EA
5	GT3-0274	Sealtite 2"	4	FT
6	GT3-0275	Connector Sealtite 90° 2"	1	EA
7	GT3-0331	Connector Sealtite STR 2"	1	EA
8	WR-02BK	Wire 2 Gauge Black Wire	10	FT
9	WR-02RD	Wire 2 Gauge Red Wire	5	FT

Wiring Schematic - 230 Volt 1 Phase

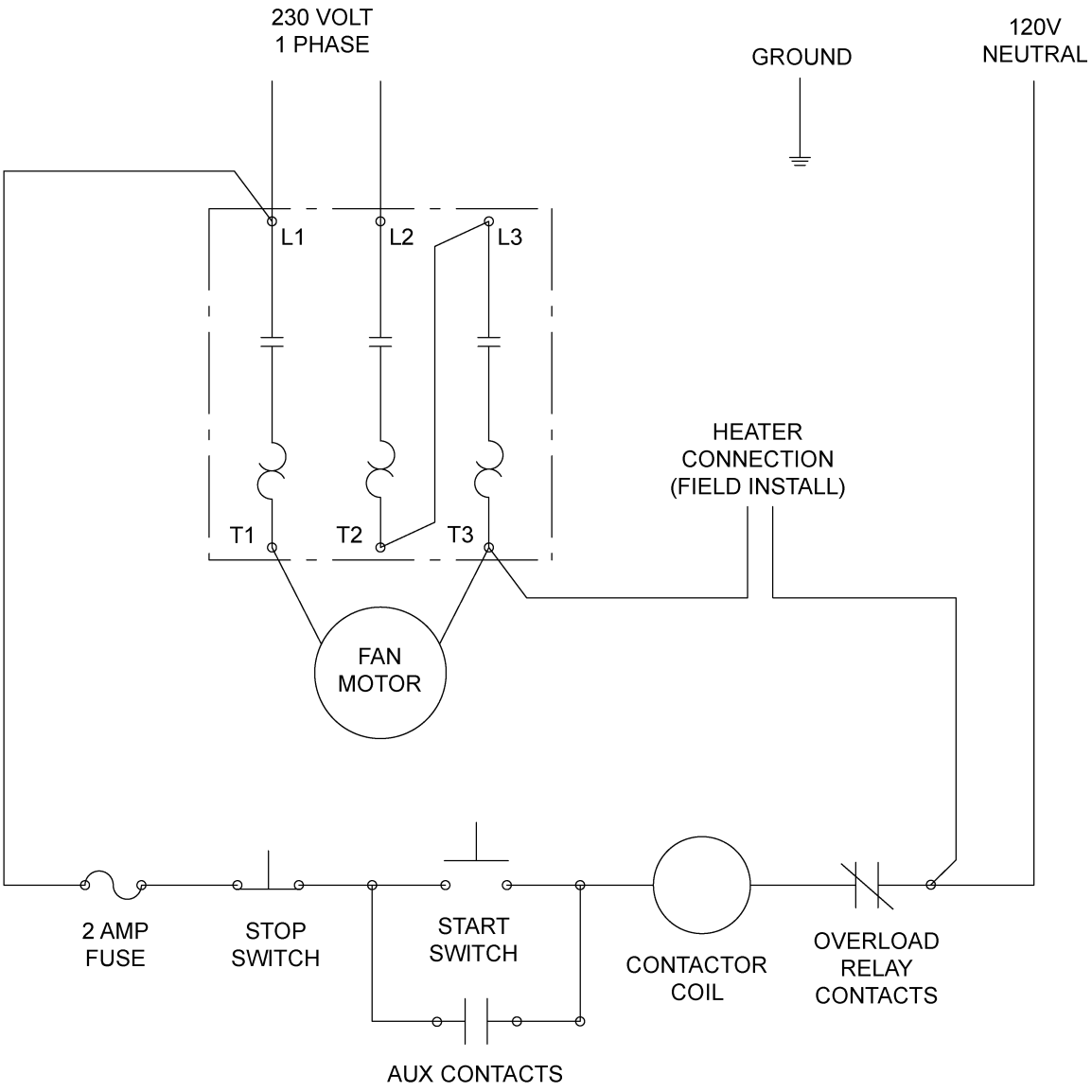

NOTICE!
THE VOLTAGE BETWEEN 'L1' AND 'N' MUST BE 120 VAC NOMINAL. OTHER VOLTAGE WILL CAUSE DAMAGE TO EQUIPMENT.

Motor Part #	Capacitor Part #	Capacitor Type	MFD	Voltage	Qty
CF-3-1 Capacitor Specifications					
C-7979	FH-7012	Electrolytic	161	250	1
	FH-7000	Electrolytic	216	250	1
	FH-7011	Oil	35	370	1
CHS-3-1 Capacitor Specifications					
FH-5474	FH-7013	Electrolytic	850	115	1
CF-5-1 Capacitor Specifications					
C-7980	FH-7000	Electrolytic	216	250	2
	CH-6898	Oil	40	370	1
FH-5476	FH-7012	Electrolytic	216	250	2
	CH-6898	Oil	40	370	1
FH-5478	FH-7000	Electrolytic	216	250	2
	FH-7010	Oil	25	370	1
CF-7.5-1 Capacitor Specifications					
C-7981	FH-7000	Electrolytic	216	250	2
	CH-6898	Oil	40	370	1
CF-10-1 Capacitor Specifications					
C-7982	FH-7000	Electrolytic	216	250	3
	CH-6898	Oil	40	370	3
CHS-10-1 Capacitor Specifications					
FH-5480	FH-7000	Electrolytic	216	250	3
	CH-6897	Oil	30	370	2
CF-15-1 Capacitor Specifications					
C-7982	FH-7000	Electrolytic	216	250	3
	CH-6899	Oil	50	370	3
C-7983	FH-7000	Electrolytic	215	250	3
	CH-6899	Oil	50	370	3

Wiring Diagram - CHS-3-1C

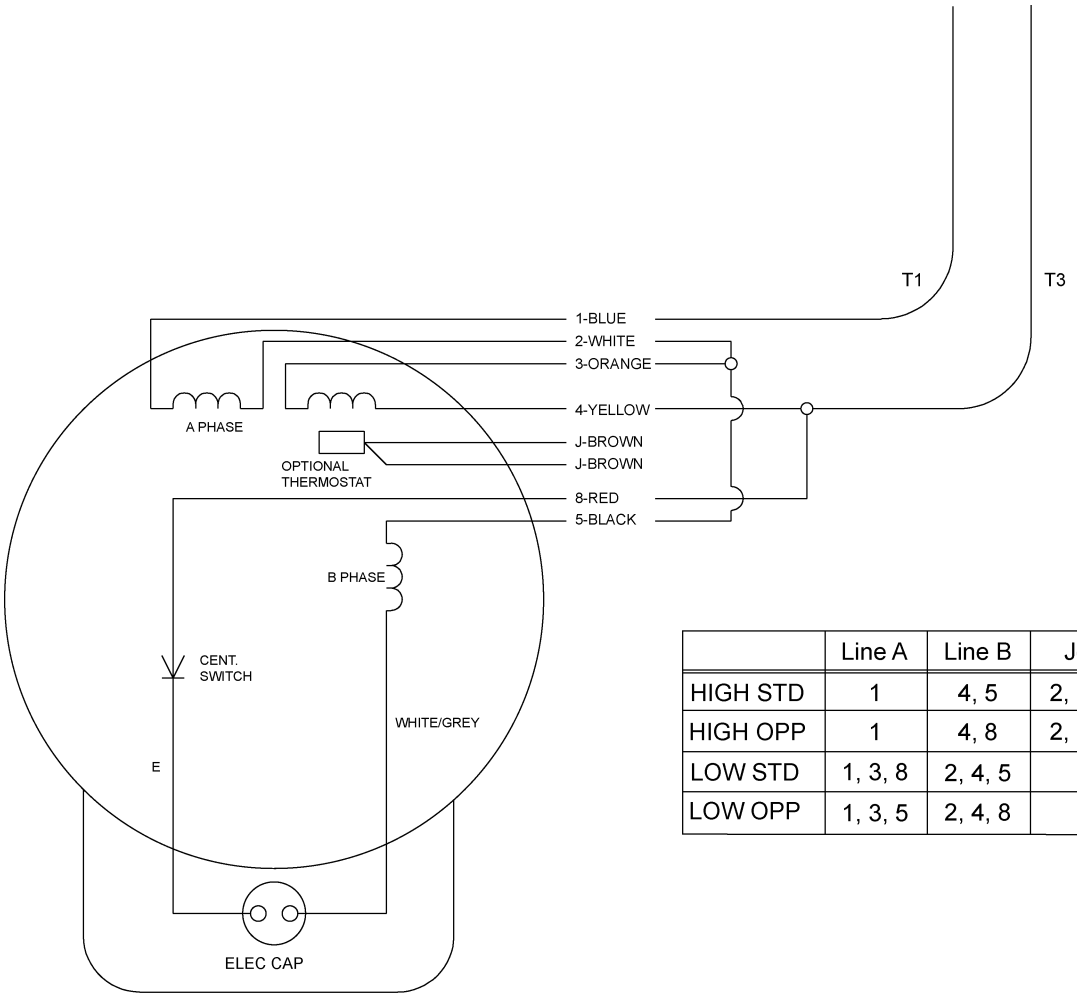

	Line A	Line B	Join
HIGH STD	1	4, 5	2, 3, 8
HIGH OPP	1	4, 8	2, 3, 5
LOW STD	1, 3, 8	2, 4, 5	-
LOW OPP	1, 3, 5	2, 4, 8	-

NOTES:

1. Standard rotation is CCW facing end opposite shaft extension.
2. Optional thermostat is provided when specified.
3. Multiple capacitors are connected in parallel unless otherwise specified.
4. Lead colors are optional. Lead must always be numbered as shown.

CHS-3-1 Capacitor Specifications					
Motor Part #	**Capacitor Part #**	**Capacitor Type**	**MFD**	**Voltage**	**Qty**
FH-5474	FH-7013	Electrolytic	850	115	1

Wiring Diagram - CF-10-1C and CHS-10-1C

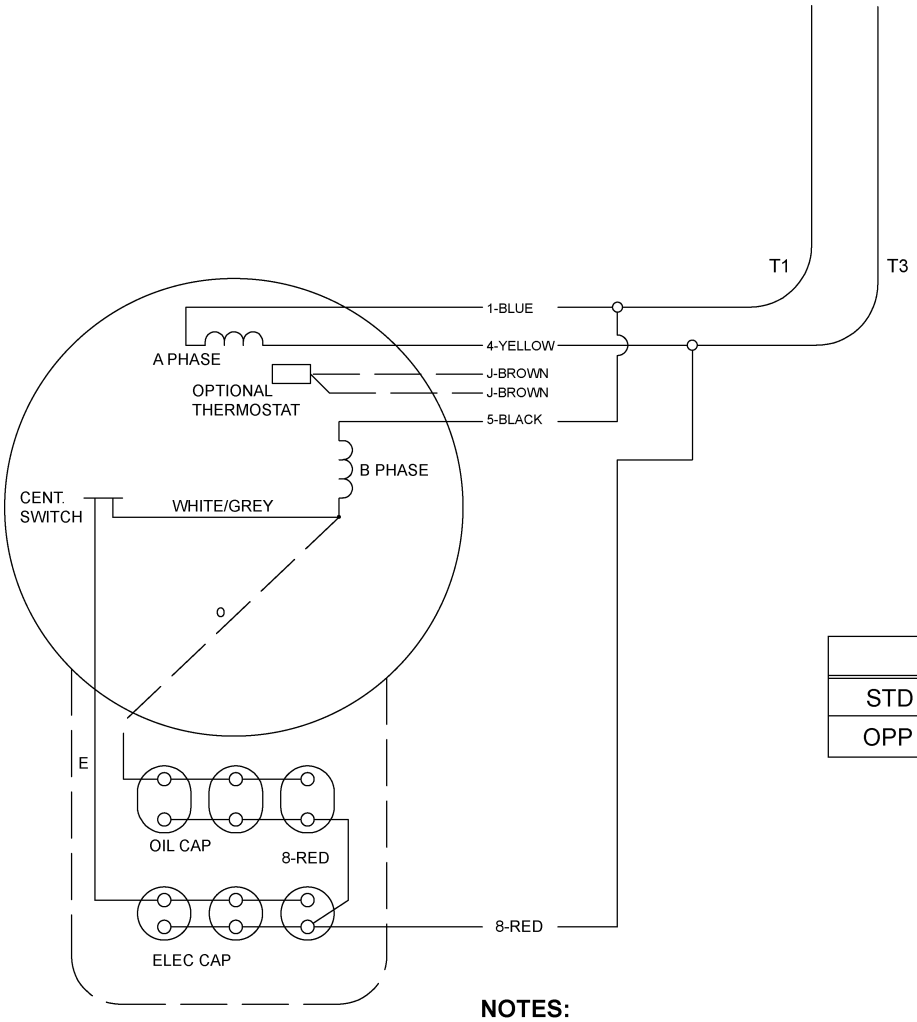

	Line A	Line B
STD	1, 8	4, 5
OPP	1, 5	4, 8

NOTES:

1. Standard rotation is CCW facing end opposite shaft extension.
2. Optional thermostat is provided when specified.
3. Multiple capacitors are connected in parallel unless otherwise specified.
4. Optional oil capacitor is provided when specified.
5. Capacitors may be seperately mounted.
6. Lead colors are optional. Leads must always be numbered as shown.

Motor Part #	Capacitor Part #	Capacitor Type	MFD	Voltage	Qty
CHS-10-1 Capacitor Specifications					
FH-5480	FH-7000	Electrolytic	216	250	3
	CH-6897	Oil	30	370	2
CF-7.5-1 Capacitor Specifications					
C-7981	FH-7000	Electrolytic	216	250	2
	CH-6898	Oil	40	370	1

Wiring Diagram - CF-15-1C

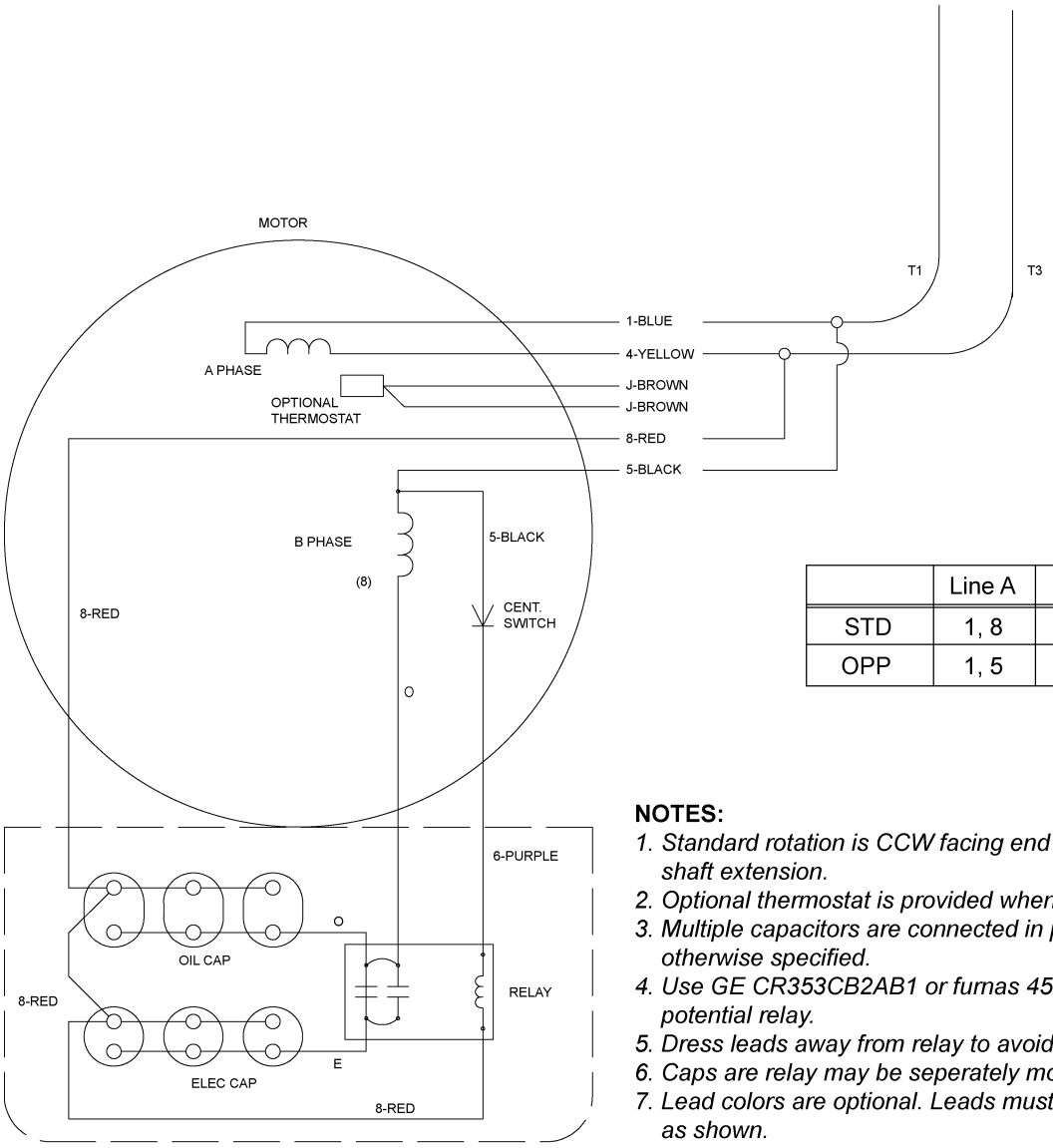

	Line A	Line B
STD	1, 8	4, 5
OPP	1, 5	4, 8

NOTES:

1. *Standard rotation is CCW facing end opposite shaft extension.*
2. *Optional thermostat is provided when specified.*
3. *Multiple capacitors are connected in parallel unless otherwise specified.*
4. *Use GE CR353CB2AB1 or furnas 45DG20AG or equivalent potential relay.*
5. *Dress leads away from relay to avoid interference.*
6. *Caps are relay may be seperately mounted.*
7. *Lead colors are optional. Leads must always be numbered as shown.*

Motor Part #	Capacitor Part #	Capacitor Type	MFD	Voltage	Qty
CF-10-1 Capacitor Specifications					
C-7982	FH-7000	Electrolytic	216	250	3
	CH-6898	Oil	40	370	3
CF-15-1 Capacitor Specifications					
C-7982	FH-7000	Electrolytic	216	250	3
	CH-6899	Oil	50	370	3
C-7983	FH-7000	Electrolytic	215	250	3
	CH-6899	Oil	50	370	3

Wiring Diagram - CF-5-1C, CF-7.5-1C, CHS-5-1C and CHS-7.5-1C

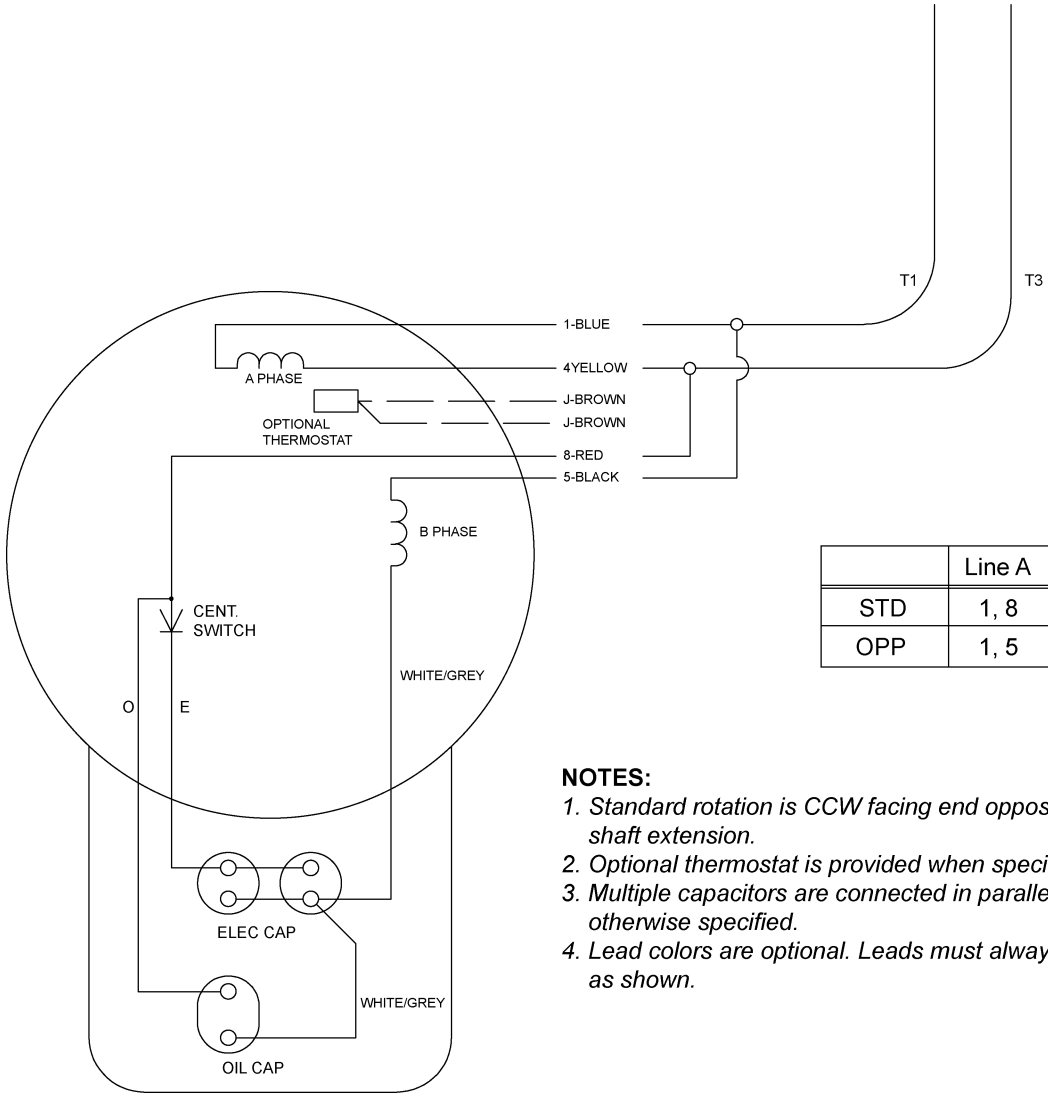

	Line A	Line B
STD	1, 8	4, 5
OPP	1, 5	4, 8

NOTES:

1. *Standard rotation is CCW facing end opposite shaft extension.*
2. *Optional thermostat is provided when specified.*
3. *Multiple capacitors are connected in parallel unless otherwise specified.*
4. *Lead colors are optional. Leads must always be numbered as shown.*

Motor Part #	Capacitor Part #	Capacitor Type	MFD	Voltage	Qty
CF-3-1 Capacitor Specifications					
C-7979	FH-7012	Electrolytic	161	250	1
	FH-7000	Electrolytic	216	250	1
	FH-7011	Oil	35	370	1
CF-5-1 Capacitor Specifications					
C-7980	FH-7000	Electrolytic	216	250	2
	CH-6898	Oil	40	370	1
FH-5476	FH-7012	Electrolytic	216	250	2
	CH-6898	Oil	40	370	1
FH-5478	FH-7000	Electrolytic	216	250	2
	FH-7010	Oil	25	370	1

Wiring Schematic - 230 Volt 3 Phase

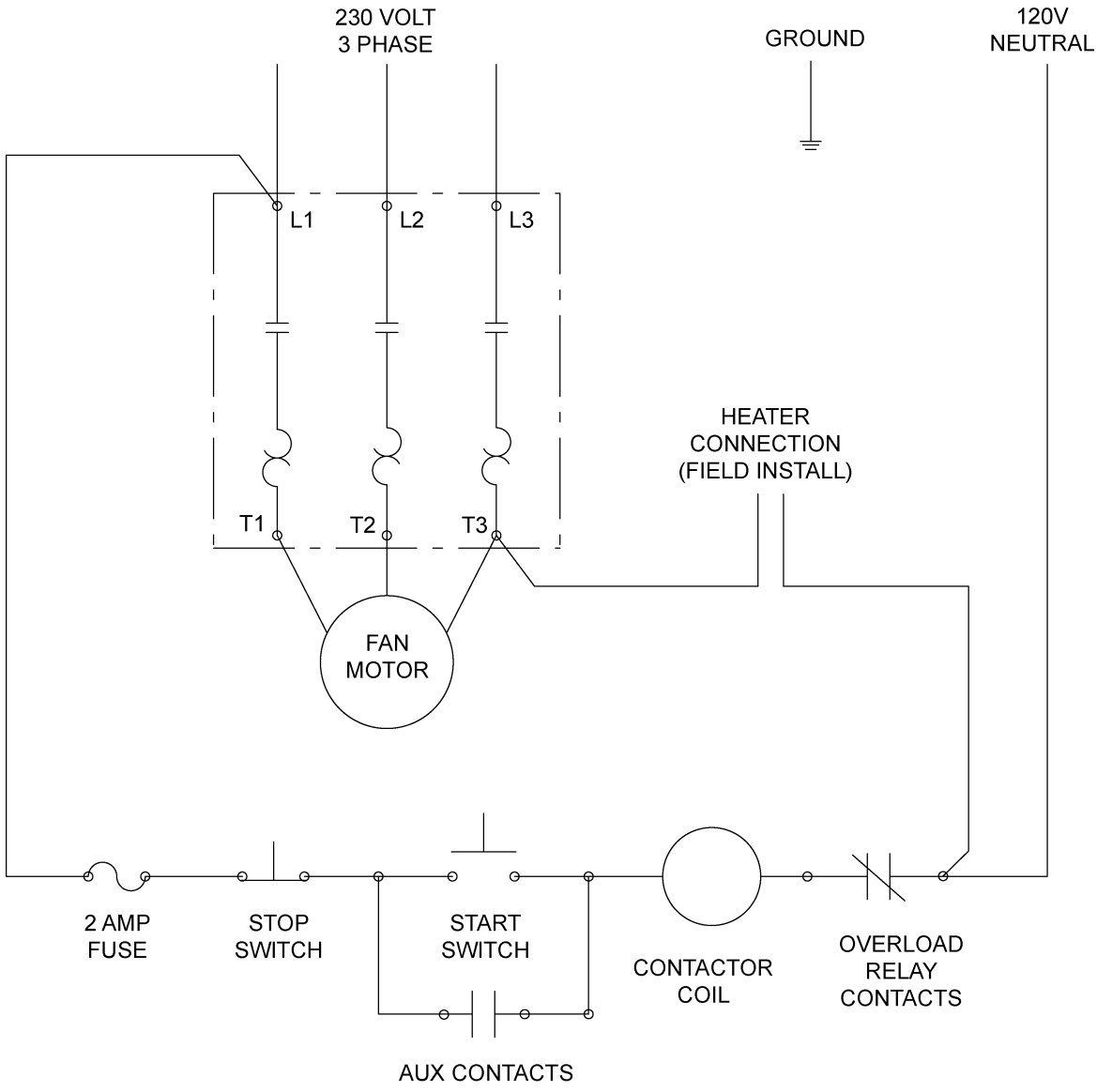

NOTICE!
THE VOLTAGE BETWEEN 'L1' AND 'N' MUST BE 120 VAC NOMINAL. OTHER VOLTAGE WILL CAUSE DAMAGE TO EQUIPMENT.

Wiring Diagram - 230 Volt 3 Phase

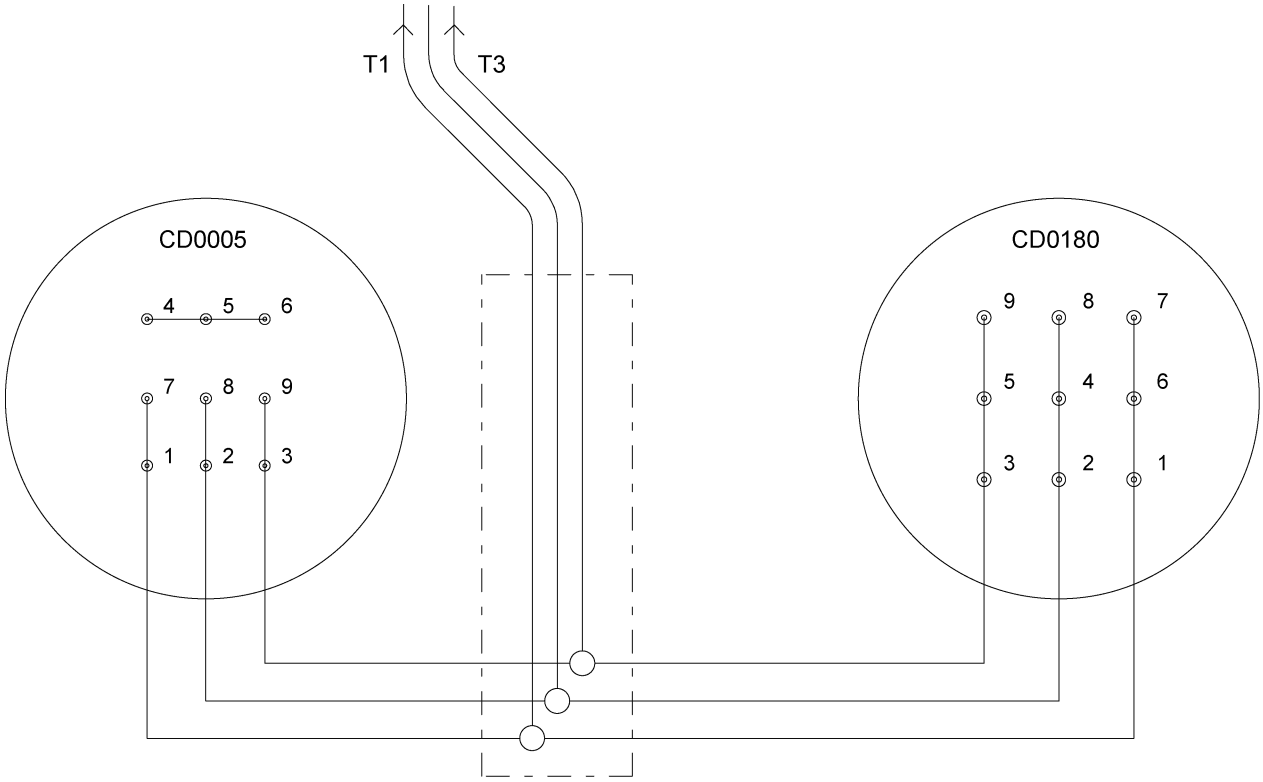

NOTE: *Refer to Chart below to determine* which connection diagram to use.

NOTES:
1. Interchange any two (2) line leads to reverse rotation.
2. Optional thermostats are provided when specified.
3. Actual number of internal parallel circuits may be a multiple of those shown above.
4. Lead colors are optional. Leads must always be numbered as shown.

Fan Model	Motor Connection Diagram
CF-3	CD0005
CF-5	CD0005
CF-7.5	CD0005
CF-10	CD0005
CF-15	CD0005
CF-20	CD0180
CF-25	CD0005
CF-30	CD0005
CF-40	CD0005
CF-50	CD0005

Fan Model	Motor Connection Diagram
CHS-3	CD0005
CHS-5	CD0005
CHS-7.5	CD0005
CHS-10	CD0005
CHS-15	CD0005
CHS-20	CD0005
CHS-30	CD0005
CHS-40	CD0180
CHS-50	CD0180

Wiring Schematic - 460 Volt 3 Phase

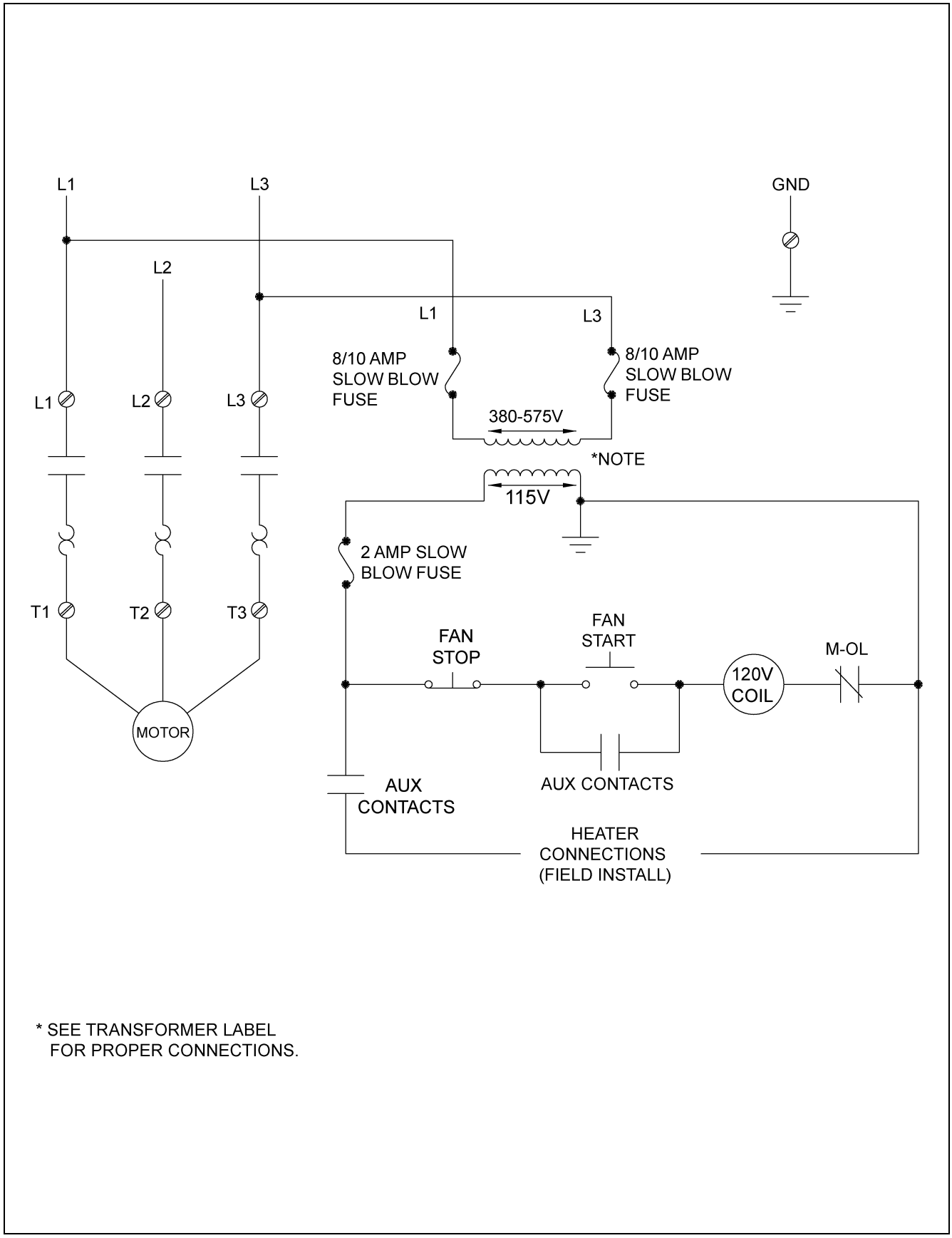

* SEE TRANSFORMER LABEL
FOR PROPER CONNECTIONS.

Wiring Diagram - 460 Volt 3 Phase

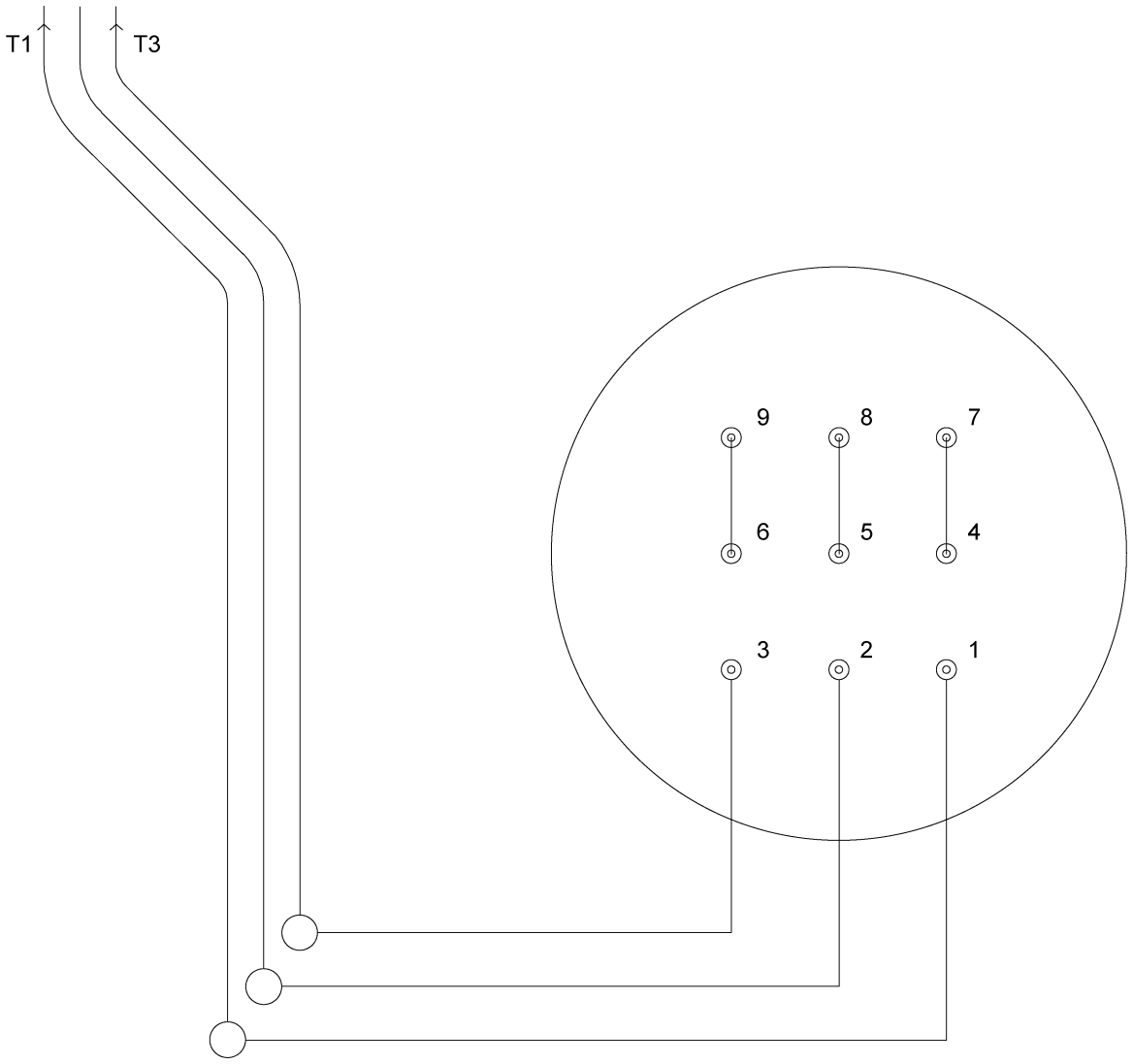

NOTES:

1. Interchange any two (2) line leads to reverse rotation.
2. Optional thermostats are provided when specified.
3. Actual number of internal parallel circuits may be a multiple of those shown above.
4. Lead colors are optional. Leads must always be numbered as shown.

Double Inlet Fans

NOTE: *Refer to supplements provided by component manufacturers for installation and maintenance of the double inlet fan bearings and shaft coupling.*

PNEG-1436 **INSTRUCTIONS - DODGE GRIP-TIGHT**

PNEG-1437 **INSTRUCTIONS - REXNORD COUPLING**

Limited Warranty — N.A. Grain Products

The GSI Group, LLC. (“GSI”) warrants products which it manufactures, to be free of defects in materials and workmanship under normal usage and conditions for a period of 12 months from the date of shipment (or, if shipped by vessel, 14 months from the date of arrival at the port of discharge). If, in GSI’s sole judgment, a product is found to have a defect in materials and/or workmanship, GSI will, at its own option and expense, repair or replace the product or refund the purchase price. This Limited Warranty is subject to extension and other terms as set forth below.

Warranty Enhancements: The warranty period for the following products is enhanced as shown below and is in lieu of (and not in addition to) the above stated warranty period. (Warranty Period is from date of shipment.)

	Product	Warranty Period
Storage	Grain Bin Structural Design ▪ Sidewall, roof, doors, platforms and walkarounds ▪ Flooring (when installed using GSI specified floor support system for that floor) ▪ Hopper tanks (BFT, GHT, NCHT, and FCHT)	5 Years
Conditioning	Dryer Structural Design – (Tower, Portable and TopDry) ▪ Includes (frame, portable dryer screens, ladders, access doors and platforms)	5 Years
	All other Dryer parts including: ▪ Electrical (controls, sensors, switches and internal wiring)	2 Years
	All Non-PTO Driven Centrifugal and Axial Fans	3 Years
	Bullseye Controllers	2 Years
Material Handling	Bucket Elevators Structural Design	5 Years
	Towers Structural Design	5 Years
	Catwalks Structural Design	5 Years
	Accessories (stairs, ladders and platforms) Structural Design	5 Years

Conditions and Limitations:

THERE ARE NO WARRANTIES THAT EXTEND BEYOND THE LIMITED WARRANTY DESCRIPTION SET FORTH HEREIN; SPECIFICALLY, GSI DISCLAIMS ANY AND ALL OTHER WARRANTIES OF ANY KIND, EXPRESS OR IMPLIED, INCLUDING, WITHOUT LIMITATION, WARRANTIES OF MERCHANTABILITY OR FITNESS FOR A PARTICULAR PURPOSE OR USE IN CONNECTION WITH: (I) ANY PRODUCT MANUFACTURED OR SOLD BY GSI, OR (II) ANY ADVICE, INSTRUCTION, RECOMMENDATION OR SUGGESTION PROVIDED BY AN AGENT, REPRESENTATIVE OR EMPLOYEE OF GSI REGARDING OR RELATED TO THE CONFIGURATION, INSTALLATION, LAYOUT, SUITABILITY FOR A PARTICULAR PURPOSE, OR DESIGN OF SUCH PRODUCTS.

The sole and exclusive remedy for any claimant is set forth in this Limited Warranty and shall not exceed the amount paid for the product purchased. This Warranty only covers the value of the warranted parts and equipment, and does not cover labor charges for removing or installing defective parts, shipping charges with respect to such parts, any applicable sales or other taxes, or any other charges or expenses not specified in this Warranty. GSI shall not be liable for any other direct, indirect, incidental or consequential damages, including, without limitation, loss of anticipated profits or benefits. Expenses incurred by or on behalf of a claimant without prior written authorization from the GSI warranty department shall not be reimbursed. This warranty is not transferable and applies only to the original end-user. GSI shall have no obligation or responsibility for any representations or warranties made by or on behalf of any dealer, agent or distributor. Prior to installation, the end-user bears all responsibility to comply with federal, state and local codes which apply to the location and installation of the products.

This Limited Warranty extends solely to products sold by GSI and does not cover any parts, components or materials used in conjunction with the product, that are not sold by GSI. GSI assumes no responsibility for claims resulting from construction defects, unauthorized modifications, corrosion or other cosmetic issues caused by storage, application or environmental conditions. Modifications to products not specifically delineated in the manual accompanying the product at initial sale will void all warranties. This Limited Warranty shall not extend to products or parts which have been damaged by negligent use, misuse, alteration, accident or which have been improperly/inadequately maintained.

Notice Procedure:
In order to make a valid warranty claim a written notice of the claim must be submitted, using the RMA form, within 60 days of discovery of a warrantable nonconformance. The RMA form is found on the OneGSI portal.

Service Parts:
GSI warrants, subject to all other conditions described in this Warranty, Service Parts which it manufactures for a period of 12 months from the date of purchase unless specified in Enhancements above.

(Limited Warranty - N.A. Grain Products_ revised 01 October 2020)

This equipment shall be installed in accordance with the current installation codes and applicable regulations, which should be carefully followed in all cases. Authorities having jurisdiction should be consulted before installations are made.

1004 E. Illinois St.
Assumption, IL 62510-0020
Phone: 1-217-226-4421
Fax: 1-217-226-4420
www.gsiag.com

Your Agriculture Company

GSI is a worldwide brand of AGCO Corporation.

Copyright © 2017 by The GSI Group, LLC
Printed in the USA

CN-331554