TOP DRY GRAIN CONDITIONING SYSTEMS

1994

AUTOFLOW
CONTROL SYSTEM INSTALLATION AND OPERATION

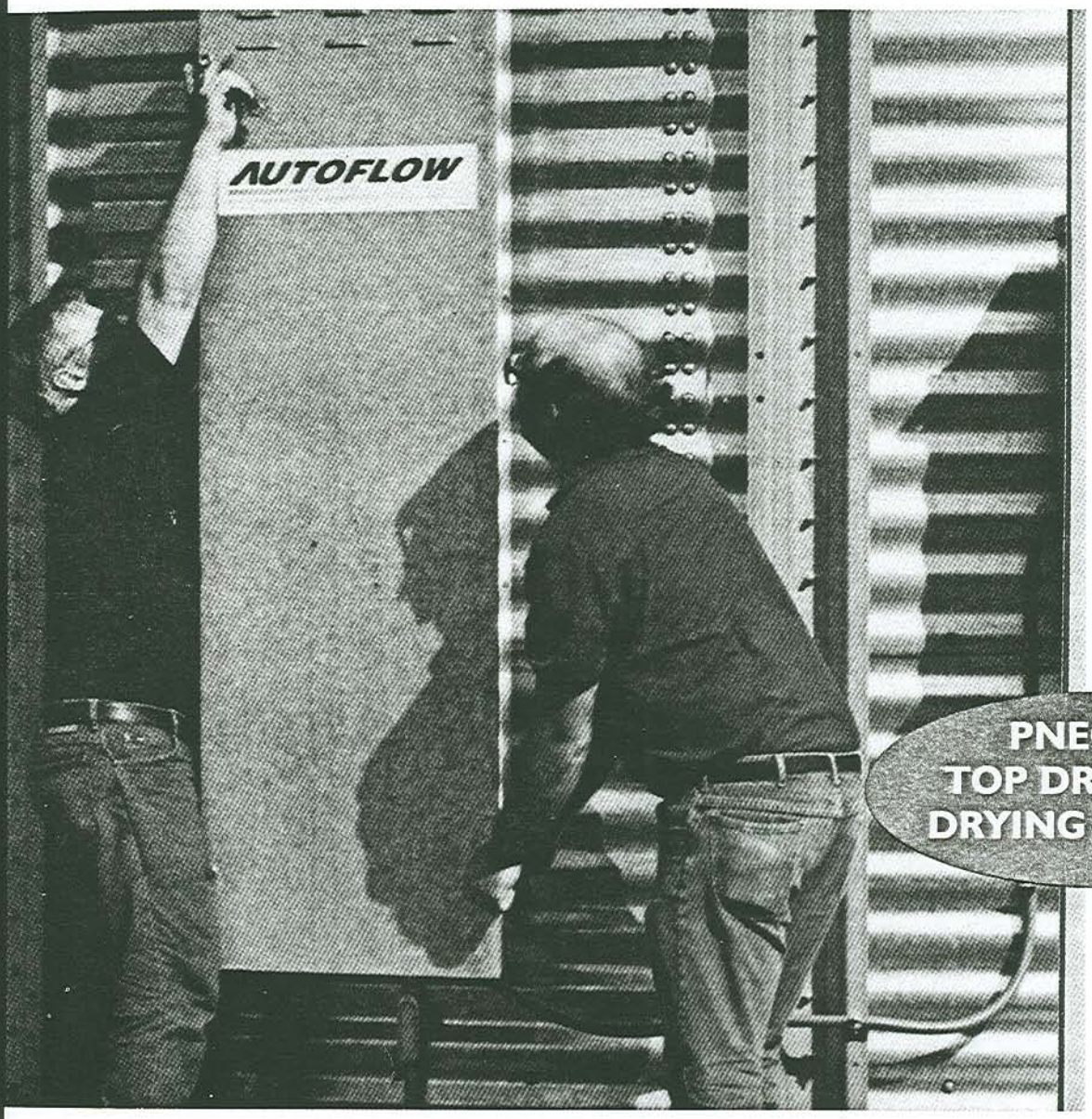

PNEG-289
TOP DRY IN BIN
DRYING SYSTEMS

GSI

AUTOFLOW

GRAIN SYSTEMS INC. ASSUMPTION, IL 217-226-4421

TABLE OF CONTENTS

Warranty....4
Safety First....5
Safety Alert Decals....6
Safety Precautions....7
Autoflow Installation....8
- Control Box Installation....8
- Actuator Installation....9
- Fan And Heater Installation....10
- Temperature Sensor Installation....11

Autoflow Wiring....13
- Autoflow Actuator Wiring....13
- Rotary Fill Switch Wiring....14
- Crop Dryer Wiring....14
- Autoflow Fill System Wiring....15
- Autoflow Cooling Fan Wiring....16
- Thermostat Sensor Wiring....16
- Autoflow Control Box Wiring....16
- Dump Chute Cable Connection....16
- Autoflow Wiring And Cable Connection....17

Dryer Control Panel Featuring The Electronic Monitoring Control System....18
- Safety Circuit Shutdown Messages....21

Dryer Start Up....22
- Drying Timers And Thermostat Chart....23

Actuator Wiring And 24V Schematic....24
Autoflow Fill System Inner Panel Wiring....25
Autoflow Fill System Control Back Panel....26
Autoflow Fan/Heater Wiring....27
Input/Output Board Terminal Identification....28
Autoflow Front Panel External Wiring....30
Autoflow Front Panel Internal Wiring....31
Notes....32

AUTOFLOW CONTROL SYSTEM

Thank you for choosing a Top Dry Autoflow Control System. This is one of the finest in bin drying systems ever built. It is designed to give excellent performance and service for many years.

This manual describes the Autoflow Control System installation and operation for all Top Dry Grain Drying Units. This includes the fan and heater, the control box and actuator.

WARRANTY

Grain Systems, Inc. warrants its products to be free of defects in material and workmanship. The only obligation of the manufacturer is to repair or replace components which have been submitted and found to be defective within 12 months after installation. If so found to be defective, the components will be repaired or replaced without charge, this constituting and entirely fulfilling the warranty obligation. Grain Systems, Inc. assumes no liability for expenses incurred without written authorizations; in no event shall liability include special or consequential damages, or exceed the selling price of the product.

This warranty does not cover products or parts which have been damaged by negligent use, misuse, alteration or accident. Electric motors, tires, and other components supplied by outside manufacturers have separate warranties, from those suppliers. This warranty is exclusive and in lieu of all other warranties, expressed or implied. Grain Systems, Inc. reserves the right to make design or specification changes at any time, without any contingent obligations to purchasers of products already sold.

All instructions shall be construed as recommendation only. Because of the many variable conditions in actual installation, Grain Systems, Inc. assumes no liability for results arising from the use of such recommendations. Any alteration in design or operation of any Grain Systems, Inc. product must be submitted and approved in writing by Grain Systems, Inc. before the alteration is made.

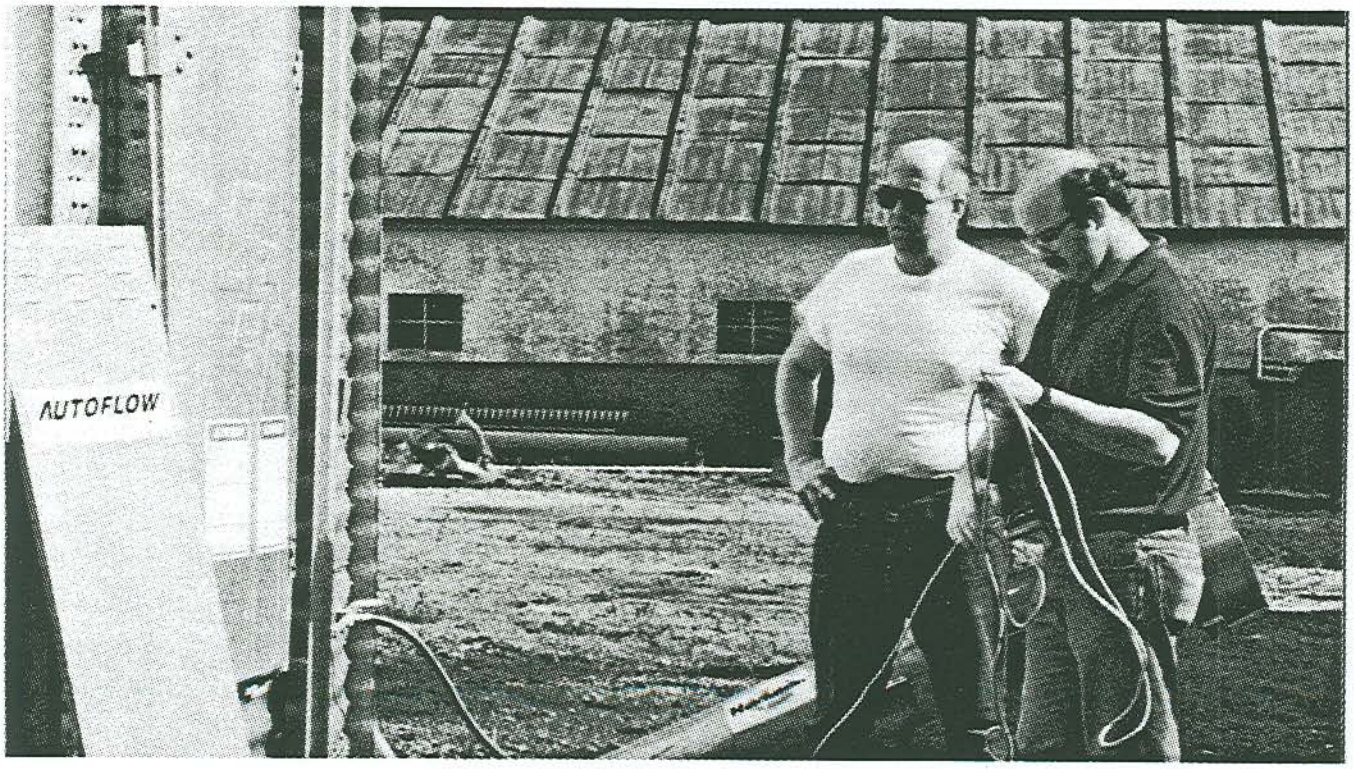

A Top Dry Grain Drying Unit being checked by the owner and a GSI Division Manager.

SAFETY FIRST

Grain Systems, Inc.'s principle concern is your safety and the safety of others associated with grain handling equipment. This manual was written with that thought in mind. We want to keep you as a customer by helping you understand safe operating proceedures and some of the problems which may be encountered by the operator and other personnel.

As owner and/or operator, it is your responsibility to know what requirements, hazards and precautions exist, and to inform all personnel associated with the equipment, or who are in the area. Avoid any alterations to the equipment. Such alterations may produce a very dangerous situation, where serious injury or death may occur.

SAFETY ALERT SYMBOL

The symbol shown below is used to call your attention to instructions concerning your personal safety. Watch for this symbol; it points out important safety precautions. It means "ATTENTION", "WARNING", "CAUTION", and "DANGER". Read the message that follows and be cautious to the possibility of personal injury or death.

WARNING! BE ALERT!

Personnel operating or working around grain handling equipment should read this manual. This manual must be delivered with equipment to its owner. Failure to read this manual and its safety instructions is a misuse of the equipment.

SAFETY ALERT DECALS

Grain Systems, Inc. recommends that you contact your local power company and have a representative survey your Autoflow installation, so your wiring is compatible with their system and adequate power is supplied to your unit.

Safety decals should be read and understood by all people in and around the grain handling area. If the following safety decals are not displayed on your dryer, or if they are damaged, contact Grain Systems, Inc. for replacement.

A CAREFUL OPERATOR IS THE BEST INSURANCE AGAINST AN ACCIDENT

SAFETY ALERT DECALS

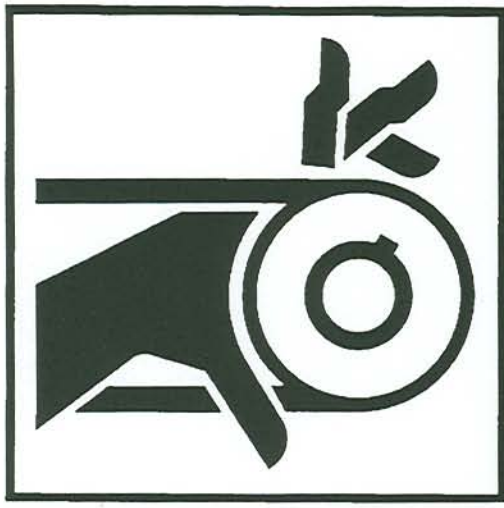

⚠ DANGER

Automatically controlled belt drive can start at any time. Keep hands clear. Failure to do so could result in serious injury or death.

DC-386

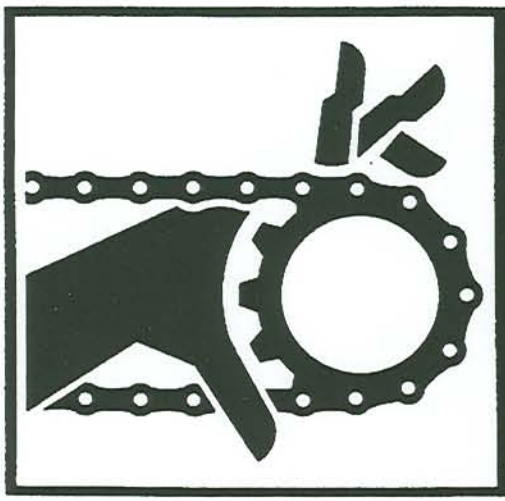

⚠ DANGER

Do not operate without shields in place. Before removing any shield, disconnect main power supply and allow all moving parts to stop. Replace shields securely before restarting unit. Failure to do so could result in serious injury or death. DC-385

⚠ DANGER

Automatic equipment can start at any time. Do not enter until fuel is shut off and electrical power is locked in off position. Failure to do so will result in serious injury or death.

DC-384

Three decals displayed on all Top Dry equipment. Belt drives, chain driven meter rolls and combustible fuels must be treated with caution.

SAFETY PRECAUTIONS

1. Read and understand the operating manual before trying to operate the Autoflow System.

2. Never operate any equipment while the guards are removed.

3. Power supply should be OFF for service of electrical components. Use CAUTION in checking voltage or other procedures requiring power to be ON.

4. Check for gas leaks at all gas pipe connections. If any leaks are detected, do not operate the unit. Shut down and repair before further operation.

5. Never attempt to operate the Autoflow by jumping or otherwise bypassing any safety devices on the unit.

6. Set pressure regulator to avoid excessive gas pressure applied to burner during ignition and when burner is in operation. See chart for operating procedures. Do not exceed maximum recommended drying temperature.

7. Keep auger drive belts tight enough to prevent slippage.

8. Use CAUTION in working around high speed fans, gas burners, augers and auxiliary conveyors which START AUTOMATICALLY.

9. Do not operate in any area where combustible material will be drawn into the fan.

10. Before attempting to remove and reinstall any propellor, make certain to read the recommended procedure listed within the servicing section of the manual.

11. Be certain that capacities of auxiliary conveyors are matched to the Top Dry auger capacities.

12. Clean grain is easier to dry. Fine material increases resistance to airflow and requires removal of extra moisture.

READ THESE INSTRUCTIONS BEFORE OPERATION AND SERVICE

SAVE FOR FUTURE REFERENCE

USE CAUTION IN THE OPERATION OF THIS EQUIPMENT

The design and manufacture of this Top Dry unit is directed toward operator safety. However, the very nature of a grain dryer having a gas burner, high voltage electrical equipment and high speed rotating parts, does present a hazard to personnel, which can not be completely safeguarded against, without interfering with efficient operation and reasonable access to components.

Use extreme caution in working around high speed fans, gas-fired heaters, augers and auxiliary conveyors, which may start without warning when the unit is operating on automatic control.

THIS UNIT HAS AUTOMATIC EQUIPMENT THAT CAN START AT ANY TIME. USE EXTREME CAUTION WHEN WORKING AROUND THE AREA.

Continued safe, dependable operation of automatic equipment depends, to a great degree, upon the owner. For a safe and dependable in bin system, follow the recommendations within this manual, and make it a practice to regularly inspect the operation of the unit for any developing problems or unsafe conditions.

Take special note of the safety precautions listed above before attempting to operate the unit.

CONTROL BOX INSTALLATION

AUTOFLOW CONTROL BOX

1. Mount the Autoflow Control Box on the side of the Top Dry Bin. Position the box so it is approximately at eye level. Ideally the control box should be positioned so the operator can see the fan/heater unit, and the cable for operating the dump chutes. Locate and drill the appropriate holes for mounting the control box. Mount the Autoflow Control Box with four 5/16" bin bolts and nuts.

The Autoflow Control Box for a Top Dry Grain Drying Bin. This controls the upper fan and heater unit, and the overhead grain drying system.

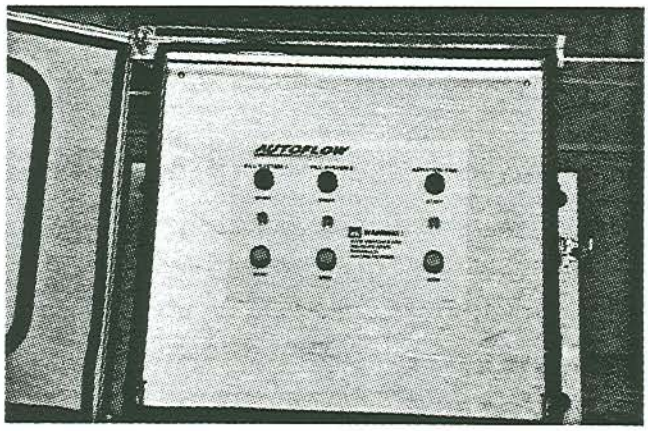

The Autoflow Fill System and Cooling Fan Control Box for a Top Dry Grain Drying Bin. It houses the motor starters for the fill system and the cooling fan.

AUTOFLOW FILL SYSTEM AND COOLING FAN CONTROL BOX

1. Mount the Autoflow Fill System and Cooling Fan Control Box on the side of the Top Dry Bin, close to the Autoflow Control Box for ease of operation. Position the box so that it is approximately at eye level. Ideally the control box should be positioned so the operator can see the fill system and cooling fan. Locate and drill the appropriate holes for mounting the control box. Mount the box with four 5/16" bin bolts and nuts.

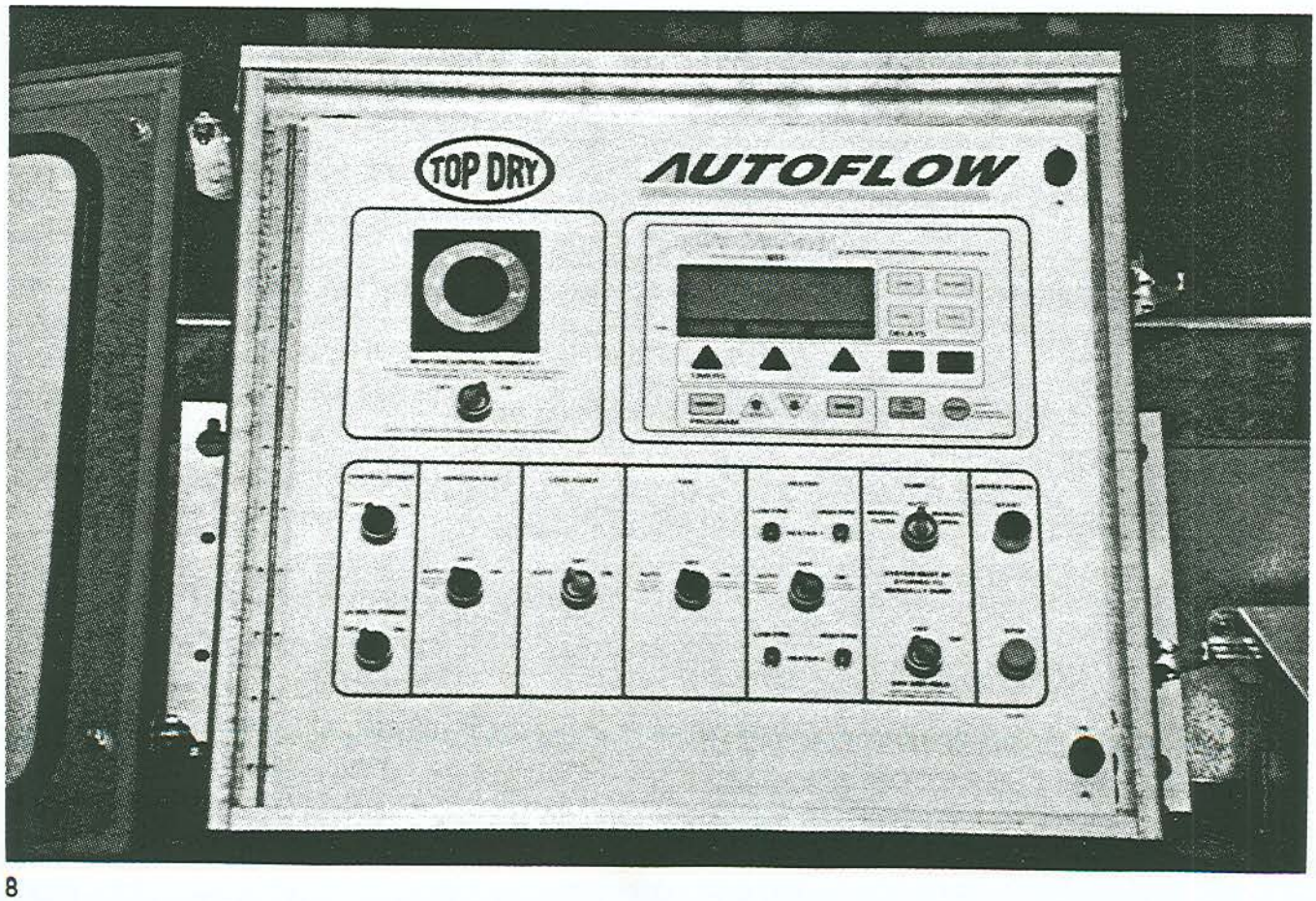

The Airflow Actuator and Control Box installed on a Top Dry bin.

ACTUATOR INSTALLATION

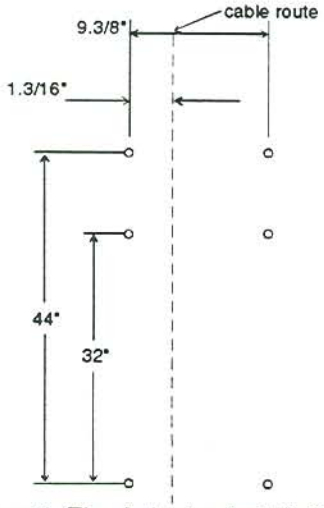

Figure 1: The Actuator installation bolt pattern.

1. If installing the Autoflow on an existing dryer, keep dump spouts closed by fastening two cable clamps just below the outside pulley bracket. Mark the third sidewall ring from the ground to indicate cable path. If present, remove existing winch and plug any holes in sidewall.

2. Mount the dump actuator using the mounting hole patterns shown in Figure 1. If the horizontal seam bolts are within 1" horizontally of the hole pattern shown, existing holes may be used to attach the actuator. Use four 5/16" x 1.1/4" bin bolts with bolt heads to the inside of the bin. Also, use flat washers on each side of the mounting brackets.

3. **Do not attach dump chute cable to actuator at this time.** Cable should not be installed until after actuator unit is completely wired and has been tested.

FAN AND HEATER INSTALLATION

1. Place the fan and heater on the platform and bolt as shown in fan and heater manual; run gas lines as shown in fan and heater manual.

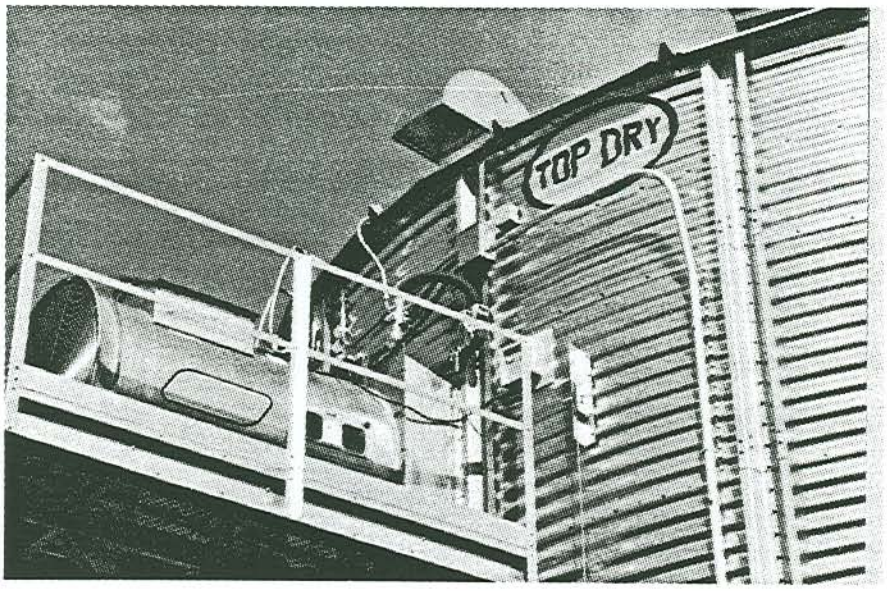

The fan and heater unit on the Top Dry platform mounted on the side of the bin.

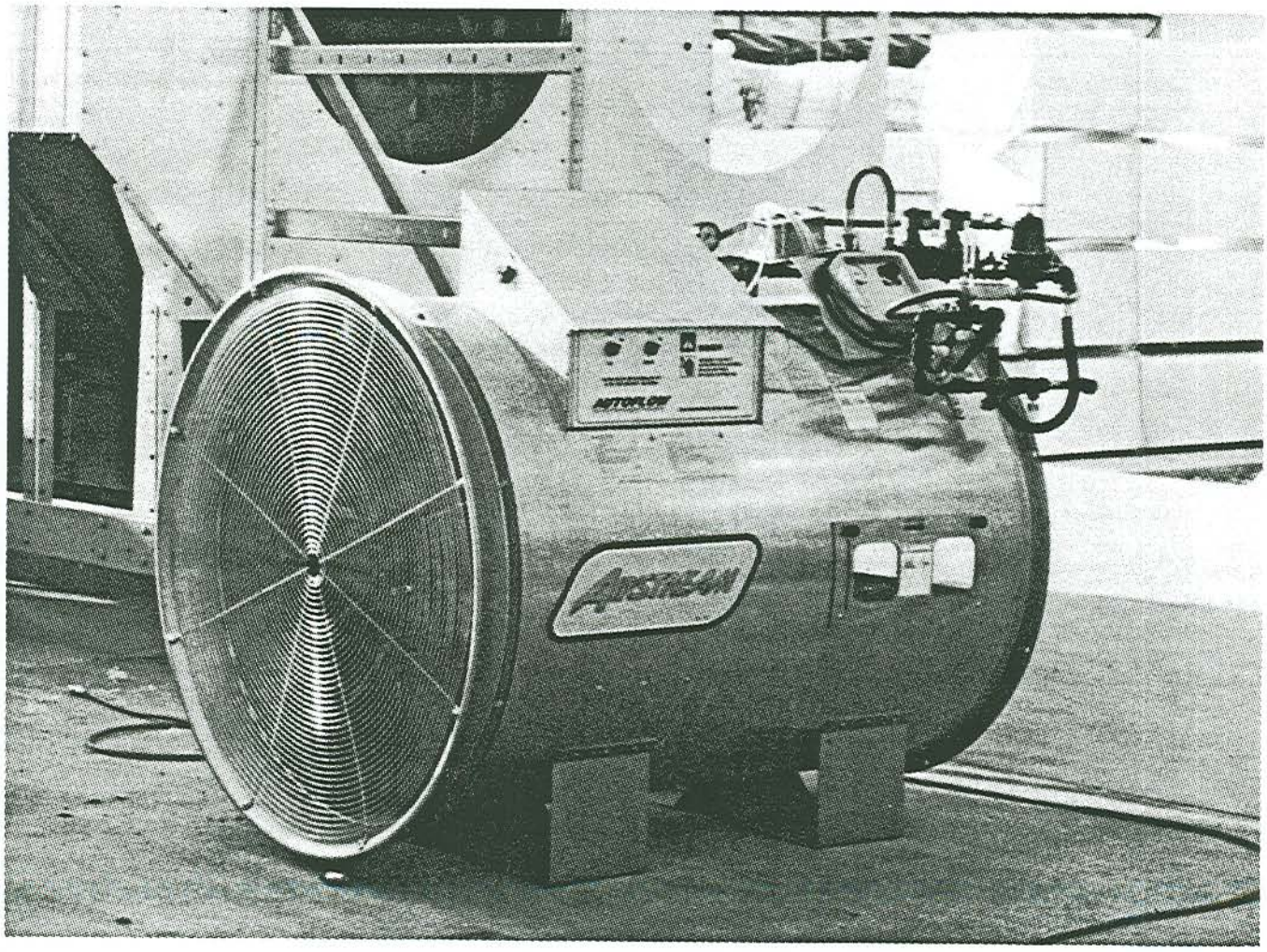

A Top Dry Fan and Heater Unit under construction at the GSI plant.

TEMPERATURE SENSOR INSTALLATION

1. Drill the 7/8" diameter holes for the temperature sensor in the leveling band support post as in Figure 2.

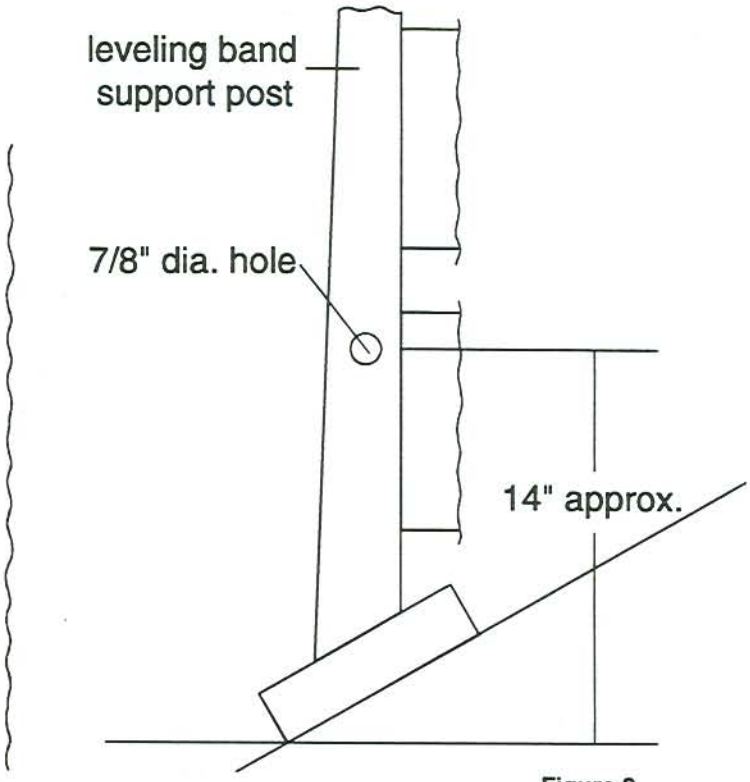

Figure 2.

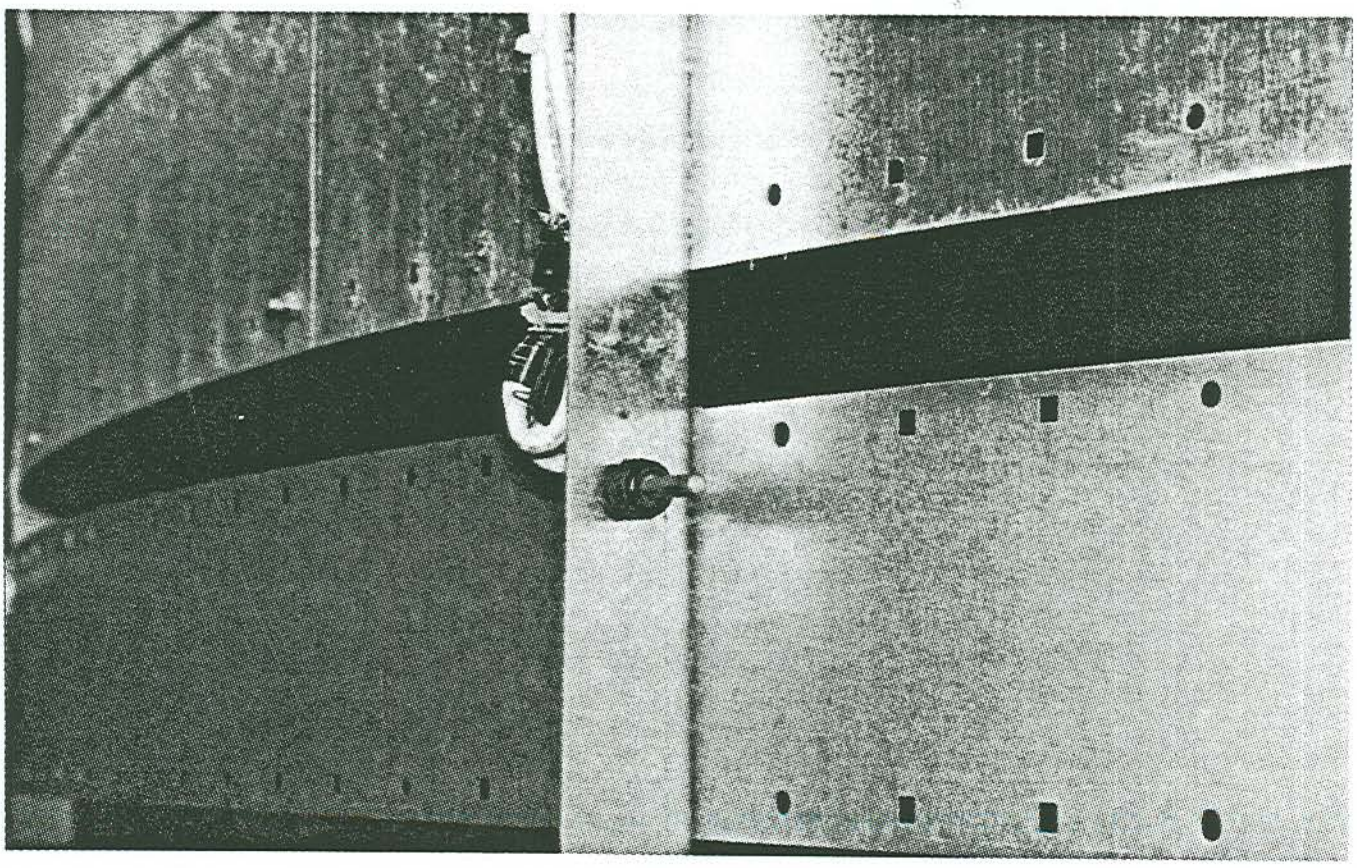

A temperature sensor installed in a Top Dry Grain Bin.

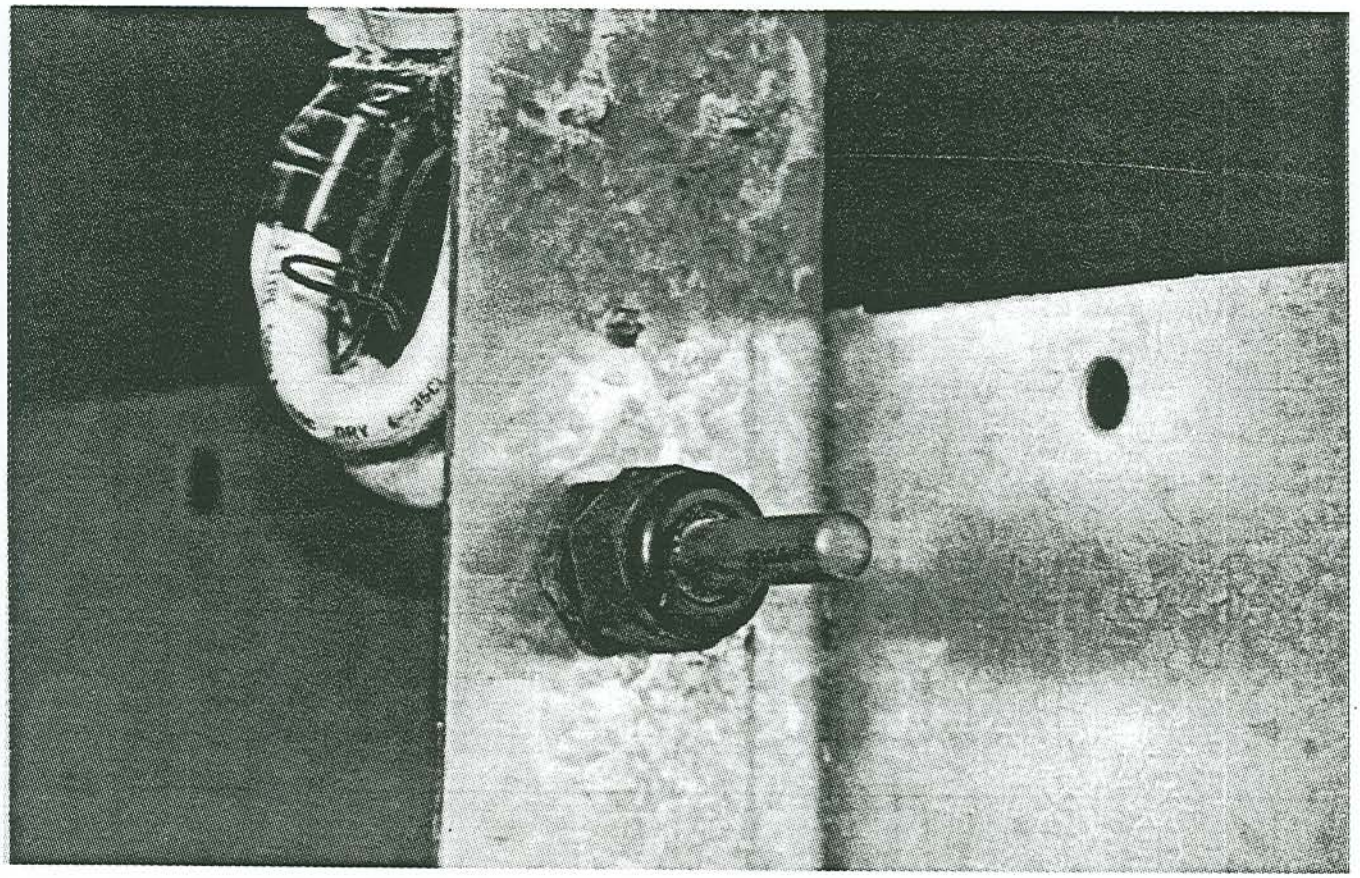

A close up view of a temperature sensor installed in a Top Dry Grain Bin.

2. Install the temperature sensor in the leveling band support post as shown in Figure 3.

3. Install the four temperature sensors in the locations shown in Figure 4.

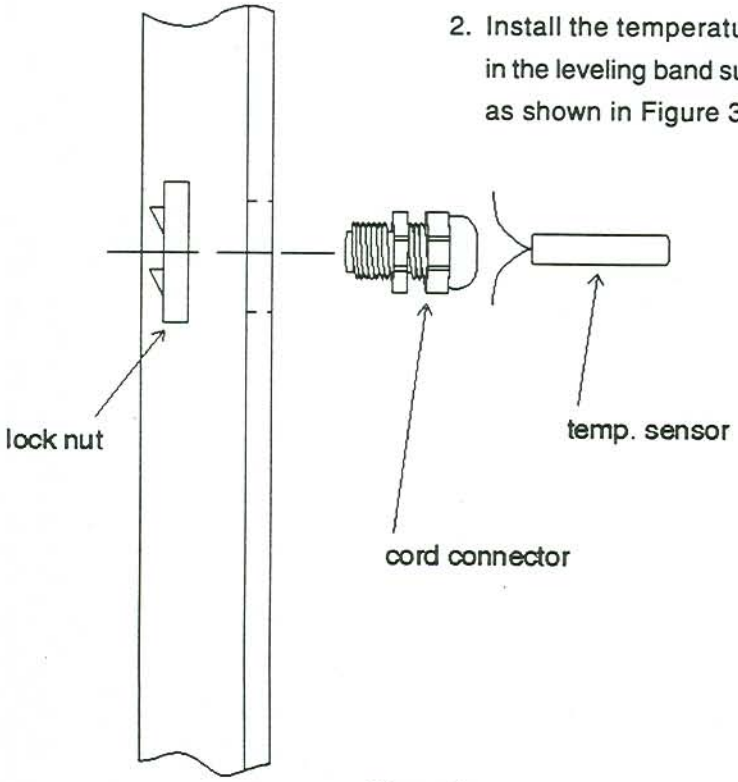

Figure 3.

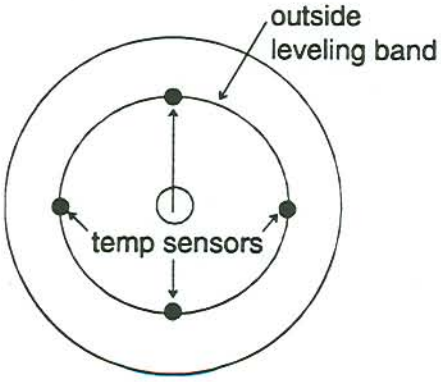

Figure 4: Top view of the Top Dry Grain Chamber.

AUTOFLOW ACTUATOR WIRING

1. Mount (2) lawn and garden batteries in actuator enclosure using mounting straps that are included.

2. Connect red(+) and black(-) wires to batteries as shown in Figure 5.

3. Connect jumper wire between batteries as shown in Figure 5.

4. Run (6) 16 guage wires between main Autoflow control box and actuator enclosure.

5. Make wire connections as shown in Figure 6.

6. Run (3) 14 guage wires (black, white and green) from main power box (15amp breaker) to actuator enclosure. These wires are to supply 110 volts to battery charger outlet.

7. Connect battery charger leads to battery as shown in Figure 5.

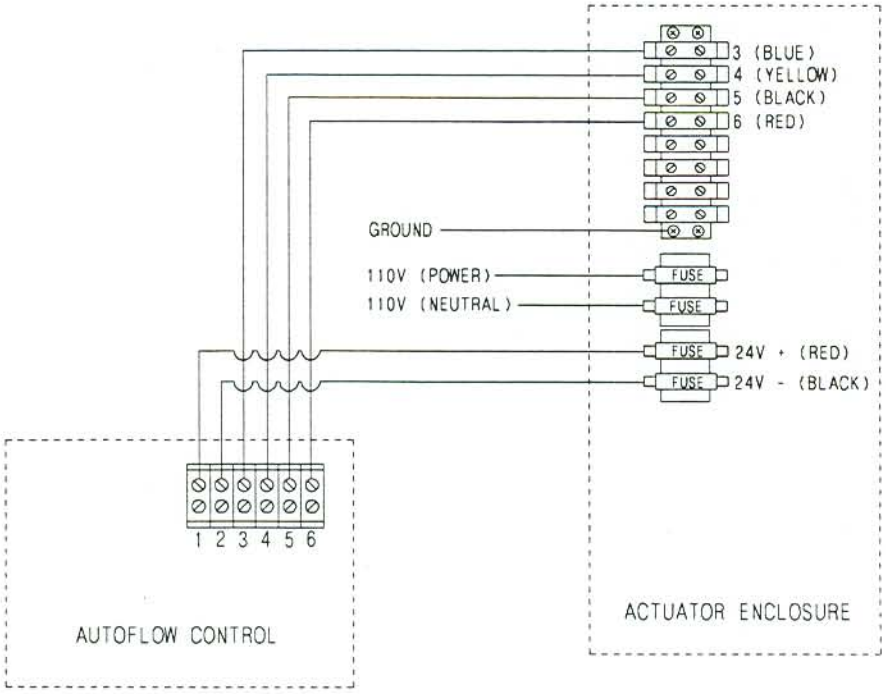

Figure 6.

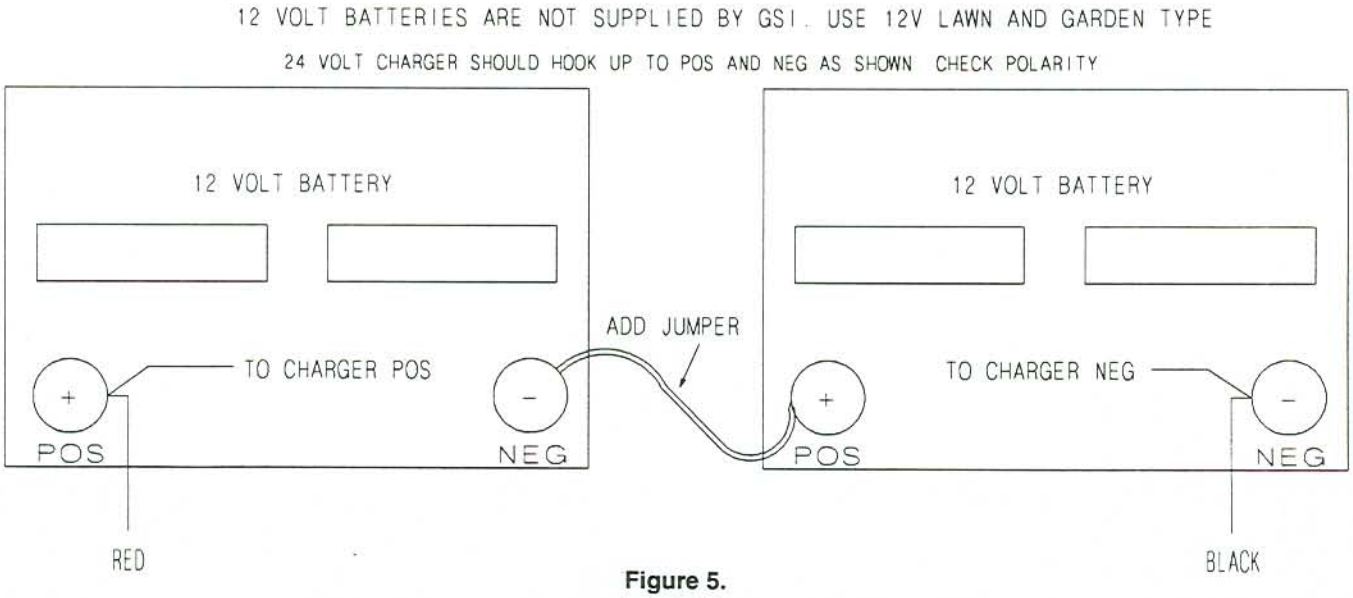

Figure 5.

AUTOFLOW WIRING

ROTARY FILL SWITCH WIRING

Fill switches should be located and mounted as shown in the Top Dry Grain Bin Erection Manual.

Wet Supply Switch

1. Run (5) 20 guage (minimum) wires from Autoflow Control Box to wet supply switch control box.
2. Make wire connections as shown in Figure 7.

Bin High Limit Switch

1. Run (5) 20 guage (minimum) wires from Autoflow Control Box to bin high limit switch control box.
2. Make wire connections as shown in Figure 7.

Drying Chamber Switches

1. Run (7) 20 guage (minimum) wires from Autoflow Control Box to junction box (not included) mounted near (3) drying chamber switch control boxes.
2. Make wire connections as shown in Figure 7.

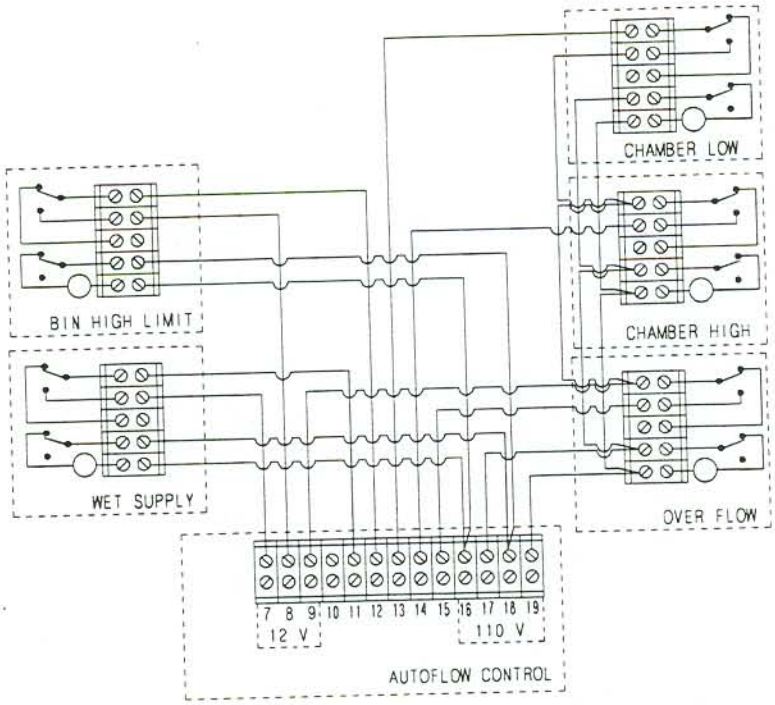

ALL ROTARY SWITCHES SHOULD BE GROUNDED PER ROTARY SWITCH INSTRUCTIONS

Figure 7.

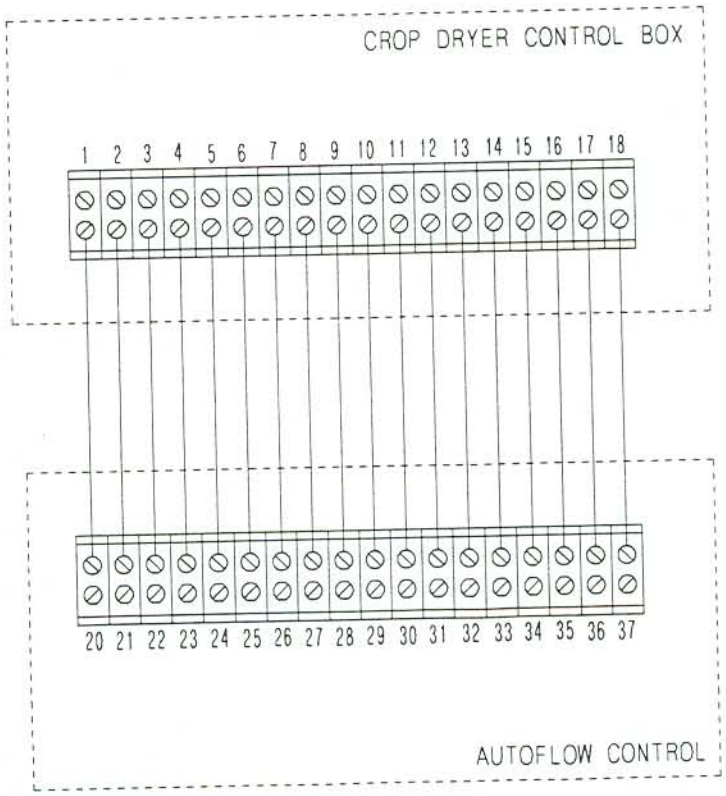

Figure 8.

CROP DRYER WIRING

Install thermostat and air switch on bin as shown in crop dryer manual.

Single Crop Dryer Units

1. Run (18) 20 guage (minimum) wires from Autoflow Control Box to fan and heater control box.
2. Make wire connections as shown in Figure 8.
3. Run lines for main power for crop dryer motor as shown in crop dryer manual. Make connections as shown in crop dryer manual.

Dual Crop Dryer Units

1. Run (18) 20 guage (minimum) wires from Autoflow Control Box to #1 fan and heater control box.
2. Make wire connections as shown in Figure 8.
3. Run (18) 20 guage (minimum) wires from Autoflow Control Box to #2 fan and heater control box.

4. Make wire connections as shown in Figure 9.

5. Remove jumper wire from terminal 34 to terminal 50 in Autoflow Control Box.

6. Remove jumper wire from terminal 45 to terminal 46 in Autoflow Control Box.

7. Add jumper between terminals 12 & 13 as shown in Figure 9.

8. Run lines for main power for crop dryer unit motors as shown in crop dryer manual. Make connections as shown in crop dryer manual.

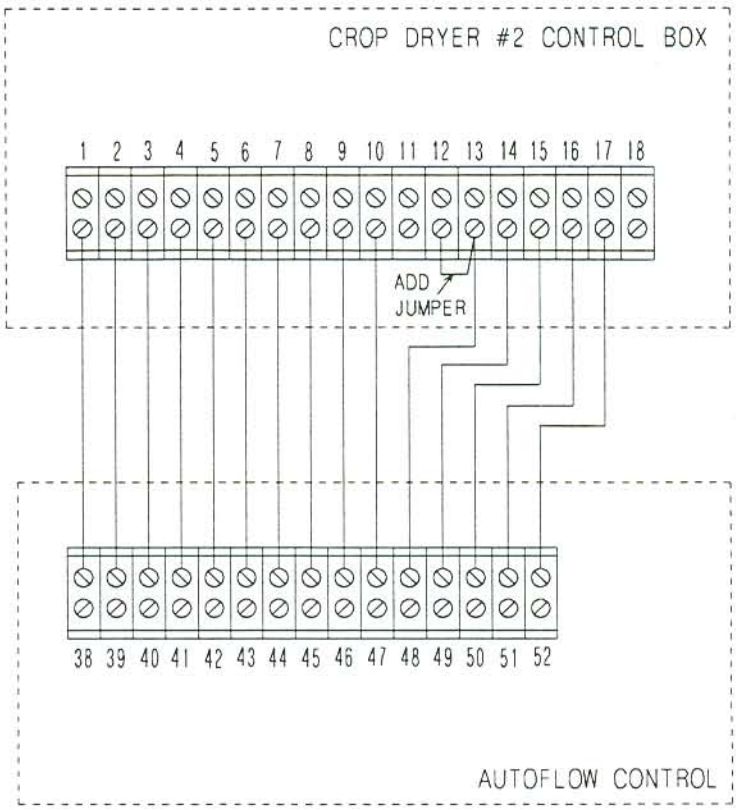

Figure 9.

AUTOFLOW FILL SYSTEM WIRING

1. Run (10) 20 guage (minimum) wires from Autoflow Control Box to Fill System and Cooling Fan Control Box.

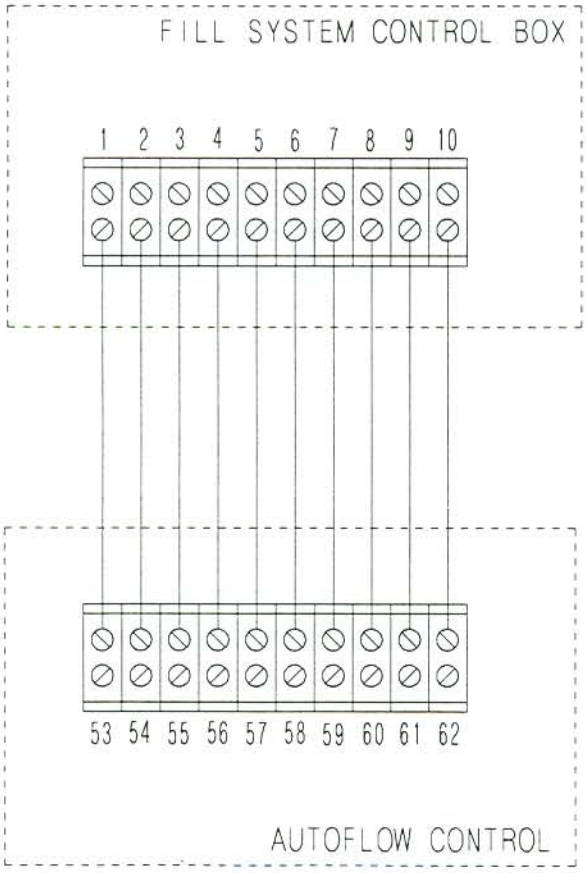

Figure 10.

2. Make wire connections as shown in Figure 10.

3. Run proper size wire for fill system equipment motors from main power disconnect box (not supplied) to fill system and cooling fan control box.

4. Make connections for main power on top side of contactors (L1,L2) as shown in Figure 11.

5. Run proper size wire for fill system equipment motors from fill system and cooling fan control box to fill system motors.

6. Make connections for motors on bottom side of contactors (T1,T2) as shown in Figure 11.

7. Connect wires to motor per motor manufacturers instructions.

AUTOFLOW WIRING

AUTOFLOW COOLING FAN WIRING

1. Run proper size wire for cooling fan motor from main power disconnect box (not supplied) to fill system and cooling fan control box.

2. Make connections for main power on top side of contactors (L1,L2) as shown in Figure11.

3. Run proper size wire for cooling fan motor from fill system and cooling fan control box to cooling fan.

4. Make connections for motors on bottom side of contactors (T1,T2) as shown in Figure 11.

5. Make connections to cooling fan per cooling fan owners manual.

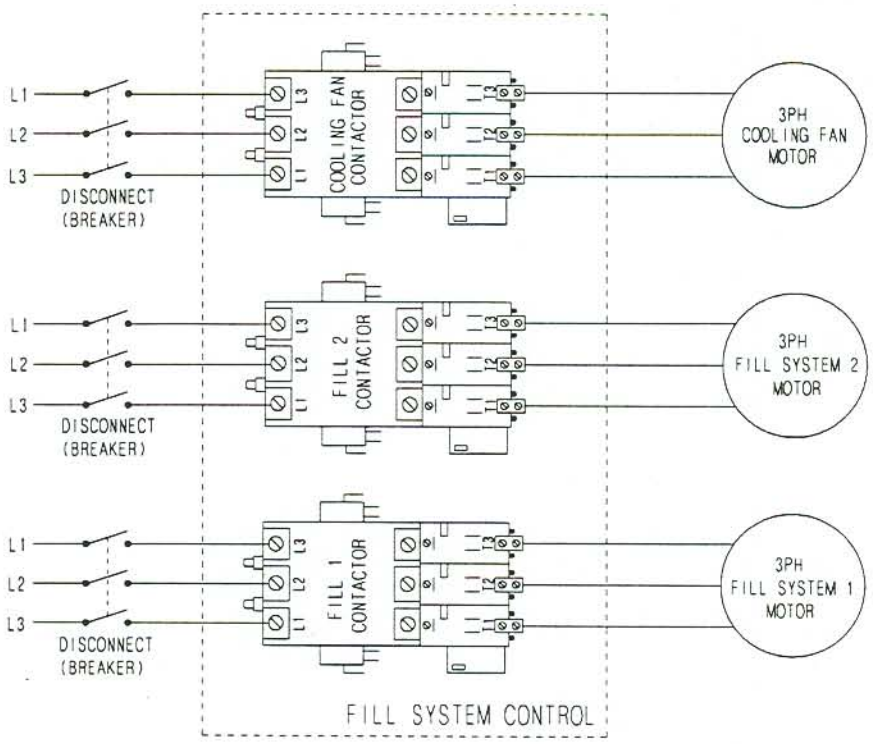

Figure 11.

THERMOSTAT SENSOR WIRING

1. Run (2) 20 guage (minimum) wires from Autoflow Control Box to junction box (not included) mounted on outside top ring of Top Dry Bin.

2. Make wire connections as shown in Figure 12.

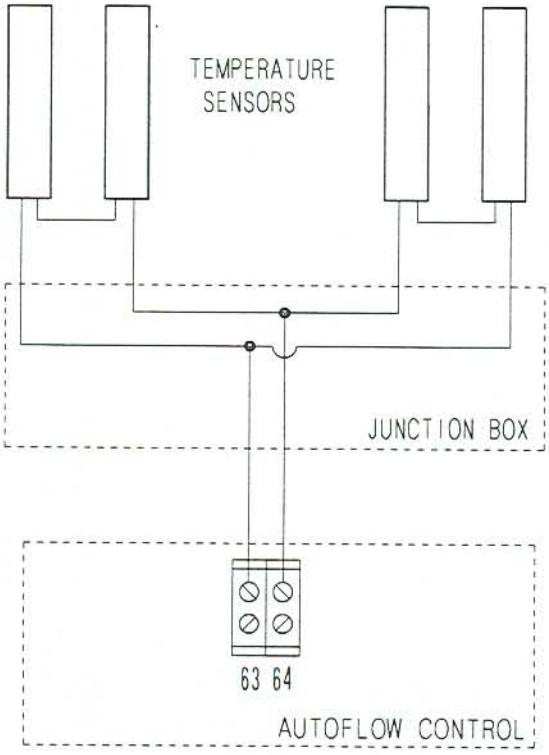

Figure 12.

AUTOFLOW CONTROL BOX WIRING

1. Run (3) 14 guage wires (black, white and green) from main power box (20 amp breaker) to Autoflow Control Box.

2. Make wire connections as shown in Figure 13.

DUMP CHUTE CABLE CONNECTION

Actuator should be wired and tested before dump chute cable is connected to actuator.

1. Open (extend) dump chute actuator 1.1/2" and shut off 24V power switch on main control box.

2. Route cable as shown in Figure 14.

3. Attach cable to bracket with swivel head connector.

AUTOFLOW WIRING AND CABLE CONNECTION

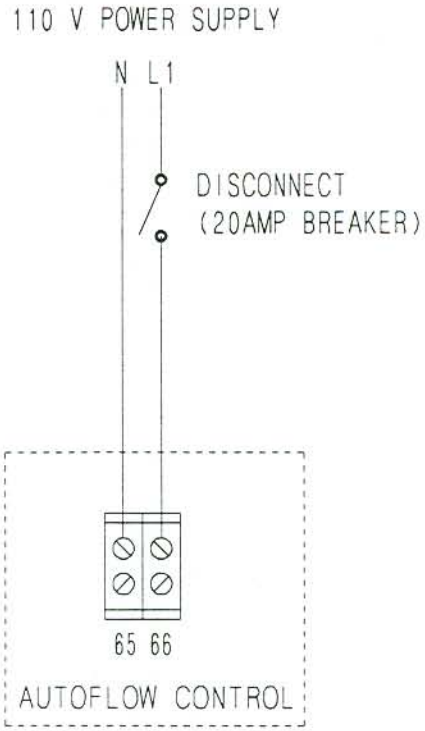

Figure 13.

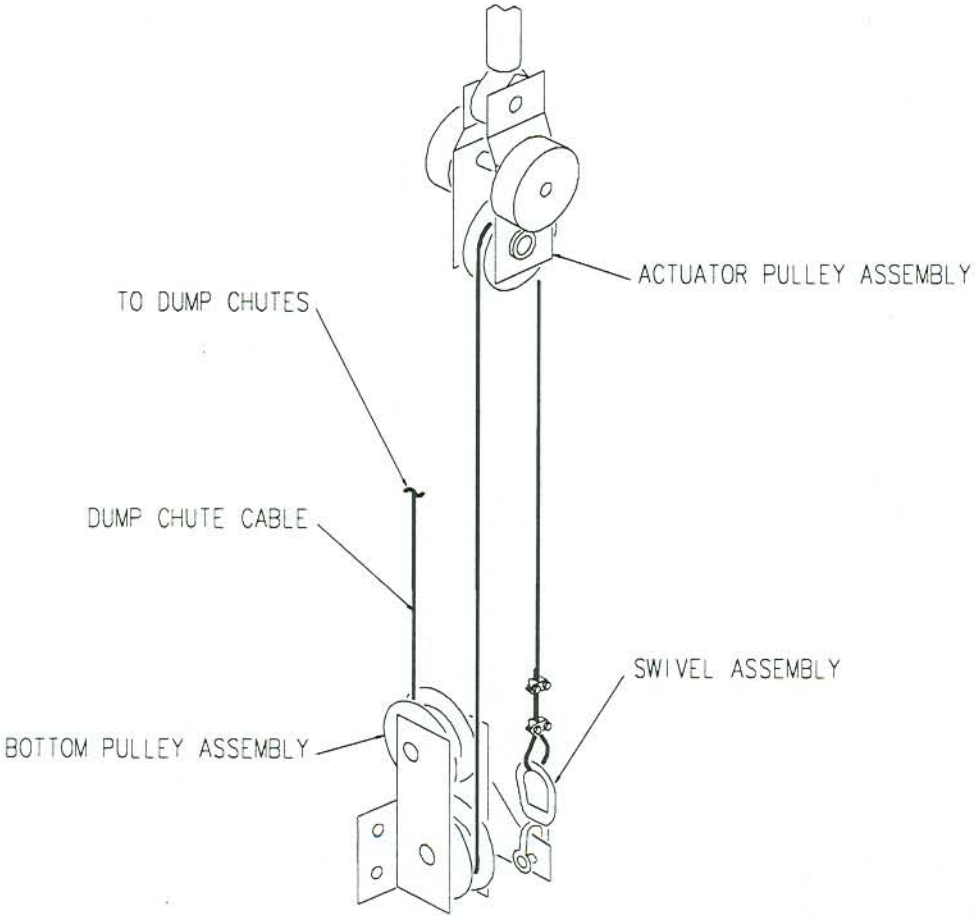

Figure 14.

DRYER CONTROL PANEL

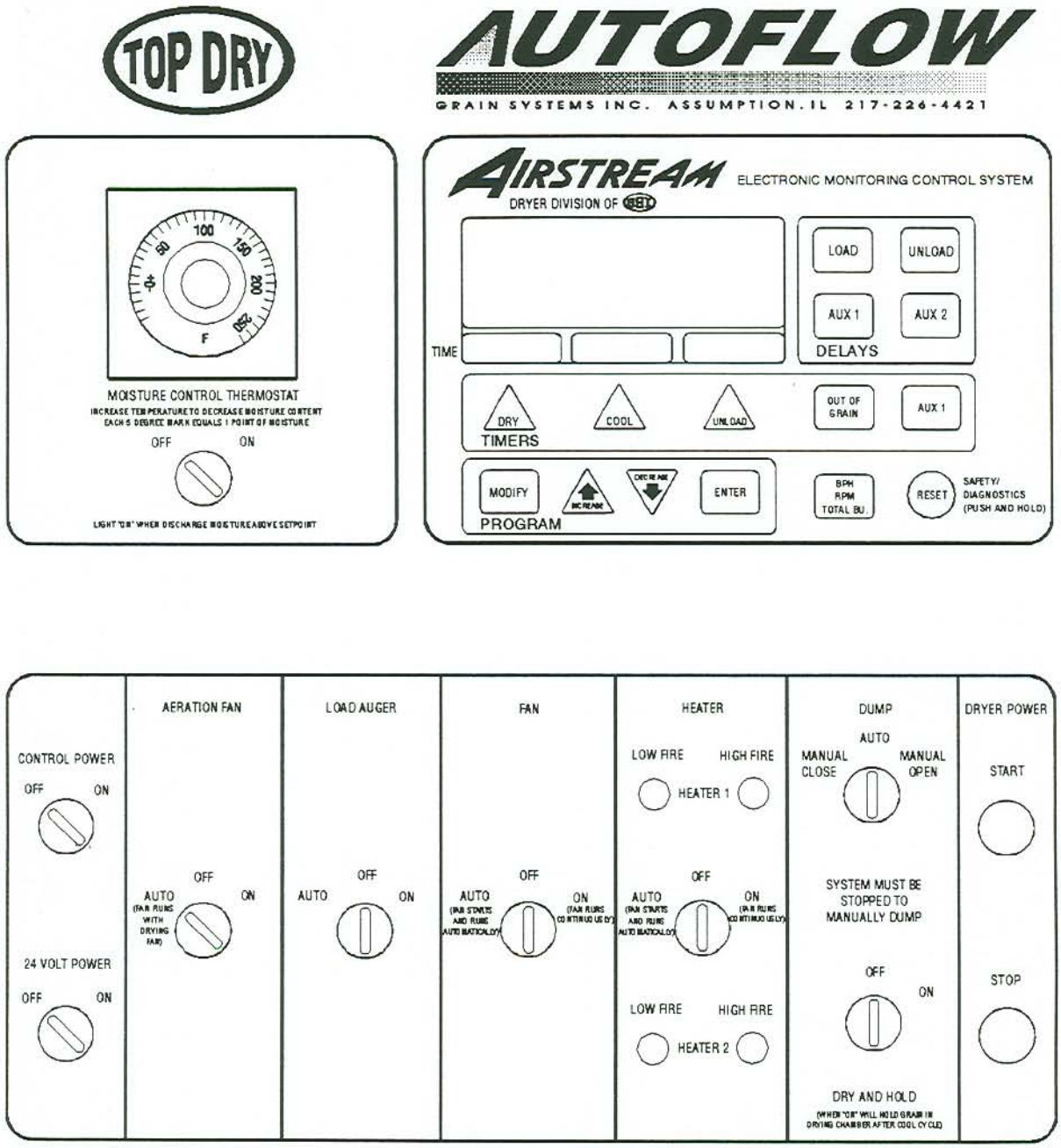

Figure 15: The Autoflow Control Panel featuring the Electronic Monitoring Control System in the upper right panel.

AUTOFLOW CONTROL PANEL FEATURING THE ELECTRONIC MONITORING CONTROL SYSTEM

The control panel provides easy access to gauges and controls, and the illuminated switches provide a quick reference for every operating function. The patent pending Electronic Monitoring Control System is a computerized control system that gives instant information regarding dryer operation.

MOISTURE CONTROL THERMOSTAT

This electronic thermostat controls the moisture level of discharged grain by sensing grain chamber temperature.

MOISTURE CONTROL SWITCH

This switch turns the power on or off to the moisture control thermostat. It lights up when the grain column temperature is below the thermostat set point.

CONTROL POWER SWITCH

The power to the Electronic Monitoring Control System is turned on or off with this switch.

24 VOLT POWER SWITCH

24 volt power to the actuator is turned on or off with this switch.

AERATION FAN SWITCH

This switch is used to select operation of the aeration fan. The on position operates the fan continuously while the system is running. The auto position turns the aeration fan on automatically just before the drying fans start. The switch will light as long as the aeration fan is operating.

LOAD AUGER SWITCH

This is used to select the operation of the fill auger. In both the auto and the manual position the load auger will operate if the dryer is low on grain, and will automatically shut off when the system is full. In the auto position with the control set to auto batch mode, the load auger will shut off when the dry cycle gets down to 25% of its original setting, and will not restart until after the unload cycle. When the control is set to autoflow mode, the load auger will run through the dry and the unload cycle, and is controlled only by the chamber high limit switch. The switch will light while fill system #1 is operating.

Note: switch also controls operation of fill system #2.

FAN SWITCH

The fan is turned on or off with this switch. The on position operates the fan continuously during auto batch, and autoflow modes. The auto position will start the fans after the low grain level switch is covered. In auto batch mode the fans will run through the dry and cool cycle and shut off during the unload. In auto flow mode the fans will run continuously through the entire drying cycle. The switch lights up after air flow is established with the air switch.

HEATER SWITCH

This switch is used to turn the burner on or off. The auto position runs the burner in auto batch mode only during the dry cycle. In auto flow mode the burner runs when the fan is running. When the switch is in the on position the burner runs when the fan is running in either the auto flow or auto batch mode. The switch will light up when flame is established in burner #1.

HIGH AND LOW FIRE LIGHTS

These indicator lights show when burners are in high flame cycle and in low flame cycle. They only light when the burner has detected flame.

DUMP SWITCH

This switch allows you to open the dump chutes manually when the autoflow system is stopped, or when you have a grain overflow error. The close and open positions of the switch are inoperable while the system is running. The switch lights up when the actuator is running.

DRY AND HOLD SWITCH

When this switch is turned to the on position, the system will run through the dry and cool cycle, and stop before the unload cycle. The switch will light when it is turned to the on position.

DRYER POWER SWITCH

This switch starts and operates the Autoflow System. If individual switch settings are incorrect the screen will produce an error when a system start is attempted.

DRYER POWER STOP SWITCH

This switch stops all Autoflow functions. If an automatic shutdown occurs, first determine and correct the cause of the shutdown. Then, press the dryer power stop button to reset the dryer before restarting.

SETTING LOAD AND AUX 1 DELAYS

The load delay is used to delay stopping both fill systems when the chamber high-limit switch is activated. The aux 1 delay is used to delay shutting down fill system 1, so it is allowed to clean out prior to stopping. After load delay, fill system 2 shuts down and fill system 1 continues to run through the aux 1 delay. Both the load and aux 1 delays are set using the same procedure as the timers.

SETTING THE AUTOBATCH OR AUTOFLOW MODE

While the system is stopped press the increase and decrease arrows at the same time. Use increase and decrease arrows to toggle between modes.

AF1=Autoflow 1 fan system
AF2=Autoflow 2 fan system
AB1=Auto batch 1 fan system
AB2=Auto batch 2 fan system

Press the enter key when finished.

SETTING THE UNLOAD DELAY

The unload delay is used to delay stopping both fill systems when the wet supply switch is deactivated. This allows for clean out of hopper tank and fill systems before shutting down the dryer. The unload delay is set using the same procedure as the timers.

DRYER MONITOR LCD DISPLAY

The first line of the LCD display normally shows what part of the drying cycle the system is in. The second line of the display shows the state of the chamber high limit switch. "YES" indicates the switch has grain against it. The third line of the display shows the same information for the chamber low limit switch. The fourth line of the display shows the time remaining on the timers.

ELECTRONIC MONITORING CONTROL SYSTEM

The Electronic Monitoring Control System controls all timing functions and safety circuit checks. It is designed to simplify dryer operation by providing printed messages and warnings on its liquid crystal display (LCD).

TURNING ON THE ELECTRONIC MONITORING CONTROL SYSTEM

Turn the control power switch to on. The monitor will display a copyright message and model number, total running time in hours and minutes and the current time and date. To activate the controller press the reset button.

SETTING THE DRY, COOL AND UNLOAD BATCH TIMERS

These switches are used to set the cycle times in either drying mode. The current settings on these three timers is displayed directly above their timer button. To change the setting of these timers follow these instructions:

1. Press the dry, cool or unload timer button.
2. Press the modify button.
3. Press the increase or decrease button to adjust the settings.
4. Press the enter button.

Note: Timer settings will not change immediately. They change on the next drying cycle unless the reset button is pressed twice. During operation the remaining time on each timer is displayed on the screen. If the power goes out or if the dryer is stopped, these times are saved by the controller. When the dryer is restarted the timers will continue timing down. The timers will return to their initial settings by pressing the reset button (twice).

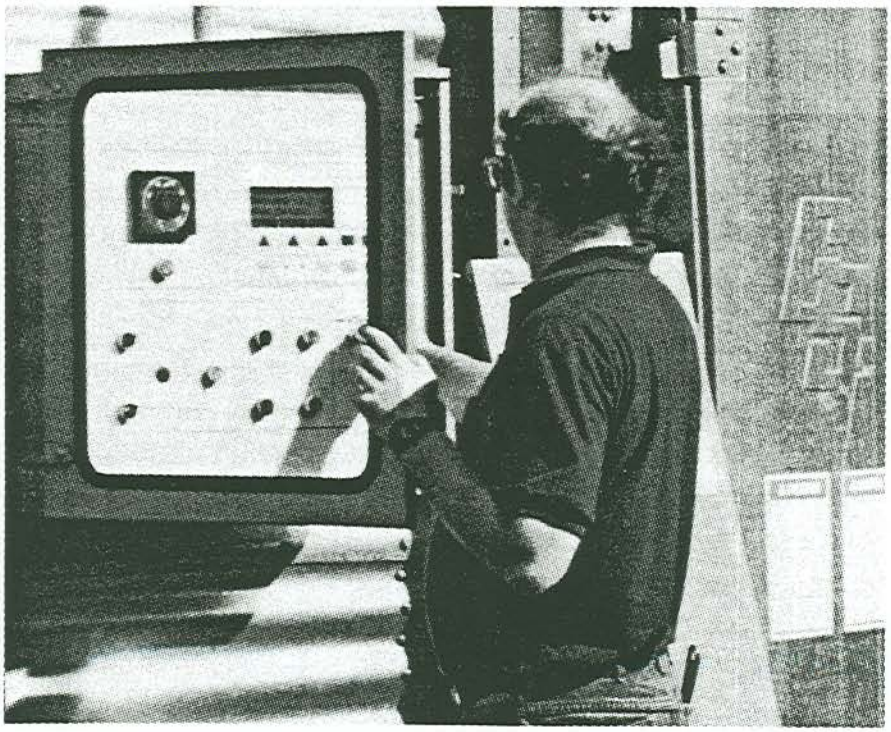

Setting the Electronic Monitoring Control System on the Autoflow.

SAFETY CIRCUIT SHUTDOWN MESSAGES

OUT OF GRAIN

Wet storage tank has run out of grain.

CHAMBER LOW SWITCH

After initially filling the drying chamber, the grain low level switch has become deactivated. Belt may be broken on the fill auger or rotary switch may have malfunctioned.

STORAGE CHAMBER FULL

Storage chamber under drying chamber is full of grain and must be unloaded before drying continues.

GRAIN OVERFLOW

Overflow rotary switch has been activated. Either the load delay has been set too long or the chamber high limit switch has malfunctioned. Grain may be dumped from the drying chamber when this error occurs.

AUXILIARY FILL SYSTEM OVERLOAD

The contactor on the auxiliary fill system is not closed when it should be.

12 VOLT POWER SUPPLY WARNING

The right circuit breaker on the input/output board has tripped.

BURNER VAPOR HIGH TEMPERATURE

The LP gas vapor temperature sensor located in the gas pipe train downstream from the vaporizer, has opened indicating that the vaporizor is running too hot and must be readjusted. This sensor is set at 200°F and automatically resets itself when cool.

BURNER WARNING FLAME NOT DETECTED

The flame sensor has failed to detect a burner flame, indicating that the burner has failed to light, there is a problem with the flame sensing circuitry or the dryer is not getting burner fuel.

L1 VOLTAGE LOST

The left circuit breaker located on the input/output board of the Electronic Monitoring Control System has tripped, or one of the hardware timers has shut down the dryer.

BURNER SHUTDOWN LOSS OF AIRFLOW

The contacts in the air switch have opened due to insufficient airflow for the burner to operate.

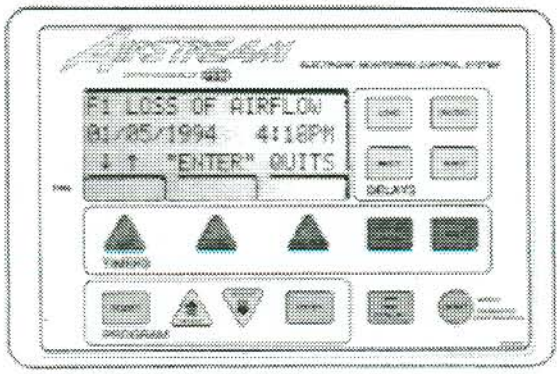

The Electronic Monitoring Control System with a safety circuit shutdown message on the LCD display.

MOTOR OVERLOAD

One of the thermal overloads on either fan motor has opened, indicating an over current condition. The overloads must be manually reset.

PLENUM HIGH TEMPERATURE

An over temperature condition has occurred inside the dryer plenum. This control is an adjustable limit that is always 6 degrees above the plenum temperature setting, and automatically resets itself when cool.

FAN HOUSING HIGH TEMPERATURE

The temperature high limit located on the fan/burner housing has opened, indicating an over temperature condition has occurred towards the rear of the fan/heater housing. This control is set at 200°F and must be manually reset.

AUXILIARY SAFETY SHUTDOWN

A shutdown has occurred due to an auxiliary installed safety feature.

FAN FAILURE NO AIRFLOW

The contacts in the air switch have opened due to the fan not turning, or the air switch may need adjustment.

FAN CANNOT START CHECK AIR SWITCH

The air switch contacts have closed prior to the fan starting, indicating a freewheeling blade or improper setting of the air switch.

DRYER START UP

GENERAL OPERATION AND ADJUSTMENT

There are two fundamental things to control with the Autoflow Top Dry (or any dryer); the drying rate and the grain flow rate. Drying rate is determined by the dryer size and shape, the grain to be dried, the airflow rate and the drying air temperature. At this time we are concerned with the only variable left that influences drying rate, the drying air temperature. We consider the best temperature to be the highest one where the desired grain quality is maintained. Corn used for livestock consumption is dryed at a maximum recommended temperature of 200 degrees Fahrenheit. Corn used for different applications, and other grains may require lower drying temperatures. By selecting a drying air temperature, a drying rate is established. To achieve a desired final grain moisture content, the grain flow rate is adjusted to match the drying rate.

INITIAL DRYER START UP

1. Be sure main control powerswitch is off. Turn on the main power disconnect to supply power to the Autoflow Control Panel.

2. Pull out the emergency stop switch on both the Autoflow Control Box and the Fill System Control Box.

3. Set the control switches as shown:
   Moisture Control: ON
   Aeration Fan: AUTO
   Load Auger: OFF
   Fan: AUTO
   Heater: AUTO
   Dump: AUTO
   Dry and Hold: OFF

4. Turn control power switch to the on position.

5. Screen should come on, and Grain Systems, Inc. screen should be displayed.

6. Press reset button twice to get system to the operational screen. Screen should read stopped. Chamber hi-limit and chamber lo-limit should read no. Timers should all read factory set time settings.

7. Press start switch and dryer will be ready to run. CAUTION! If load auger switch is on, fill system will start immediately upon pressing start switch.

8. Set timers and grain thermostat to recommended initial settings from the chart on page 23.

9. CAUTION! Be sure all personnel are clear of fill systems, and turn load auger switch to auto position. Fill system should start immediately.

10. Fill system will continue to run until chamber high limit switch is activated, and load delay has expired. Fill system will restart when chamber high limit is deactivated.

11. When grain level activates chamber low limit switch, the crop dryer and cooling fan should start and the dry timer should start to time down.

12 The Autoflow will not dump any grain until the dry timer has timed out, and grain has reached the temperature setting on the grain thermostat. On initial start up, the dry timer will time out well before the grain comes up to temperature. On the next few cycles, the grain thermostat may come up to temperature before dry timer times out. It is advisable to take a sample from the outer area of the dryer, and check the moisture content when the grain temperature is approaching the set point. Adjust the set point a few degrees up or down, if required. System should cycle off of thermostat, as soon as system drying has equalized.

DRYING TIMERS AND THERMOSTAT CHART

BIN DIAMETER	CROP DRYER	POINT REMOVAL	GRAIN THERMOSTAT	DRY TIME MINUTES	DUMP TIME SECONDS
18	36" 12HP	5	105	11	25
18	36" 12HP	10	105	18	25
18	36" 12HP	15	105	29	25
18	36" 16HP	5	105	9	25
18	36" 16HP	10	105	15	25
18	36" 16HP	15	105	24	25
24	36" 16HP	5	105	15	28
24	36" 16HP	10	105	24	28
24	36" 16HP	15	105	39	28
24	42" 30HP	5	105	10	28
24	42" 30HP	10	105	17	28
24	42" 30HP	15	105	28	28
30	42" 20HP	5	105	16	25
30	42" 20HP	10	105	25	25
30	42" 20HP	15	105	42	25
30	42" 40HP	5	105	13	25
30	42" 40HP	10	105	20	25
30	42" 40HP	15	105	34	25
30	(2) 42" 30HP	5	105	11	25
30	(2) 42" 30HP	10	105	18	25
30	(2) 42" 30HP	15	105	30	25
36	42" 40HP	5	105	18	30
36	42" 40HP	10	105	28	30
36	42" 40HP	15	105	46	30
36	(2) 42" 30HP	5	105	11	30
36	(2) 42" 30HP	10	105	18	30
36	(2) 42" 30HP	15	105	30	30
36	(2) 42" 40HP	5	105	9	30
36	(2) 42" 40HP	10	105	16	30
36	(2) 42" 40HP	15	105	26	30

Based on a crop dryer temperature of 180 degrees Fahrenheit.

If operating at a temperature other than 180 degrees Fahrenheit, the initial setting of the grain thermostat should be according to the chart below.

Operating Temperature	Grain Thermostat
140-160 deg F	95 deg F
180 deg F	105 deg F
200 deg F	115 deg F

ACTUATOR WIRING AND 24V SCHEMATIC

24 VOLT DC ACTUATOR WIRING

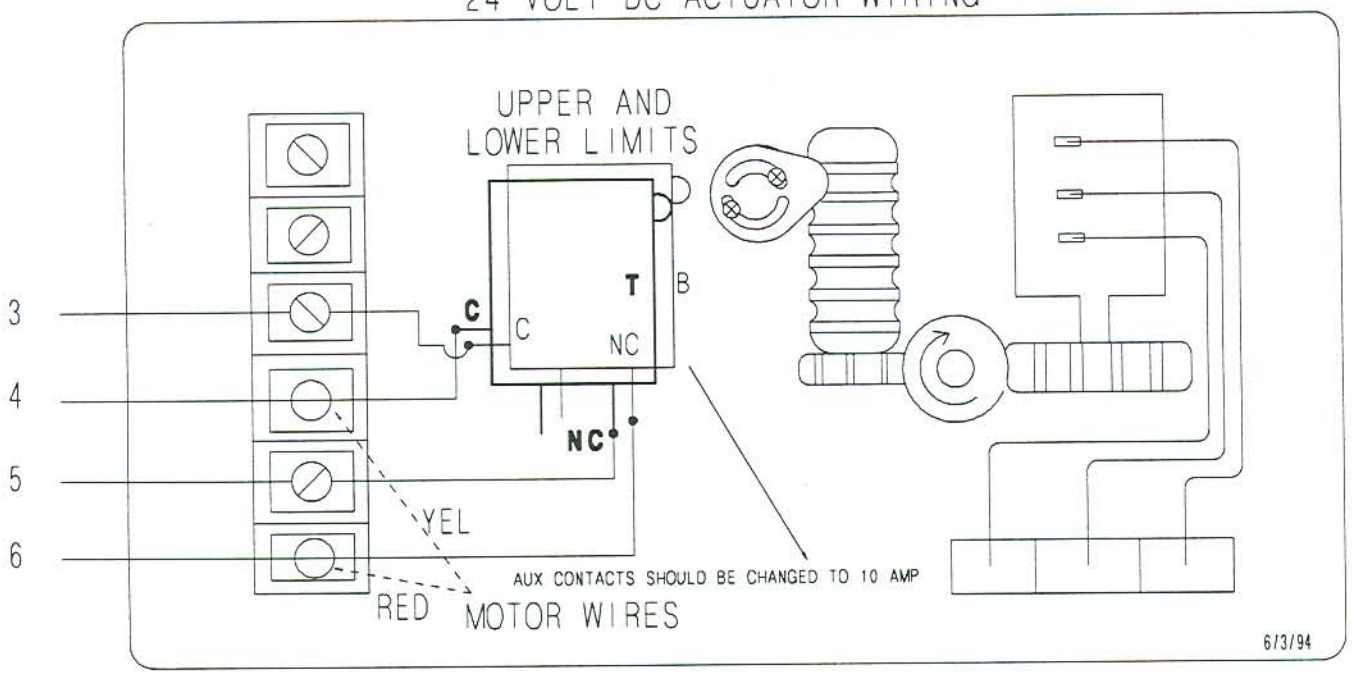

TOPDRY AUTOFLOW 24V CIRCUIT SCHEMATIC

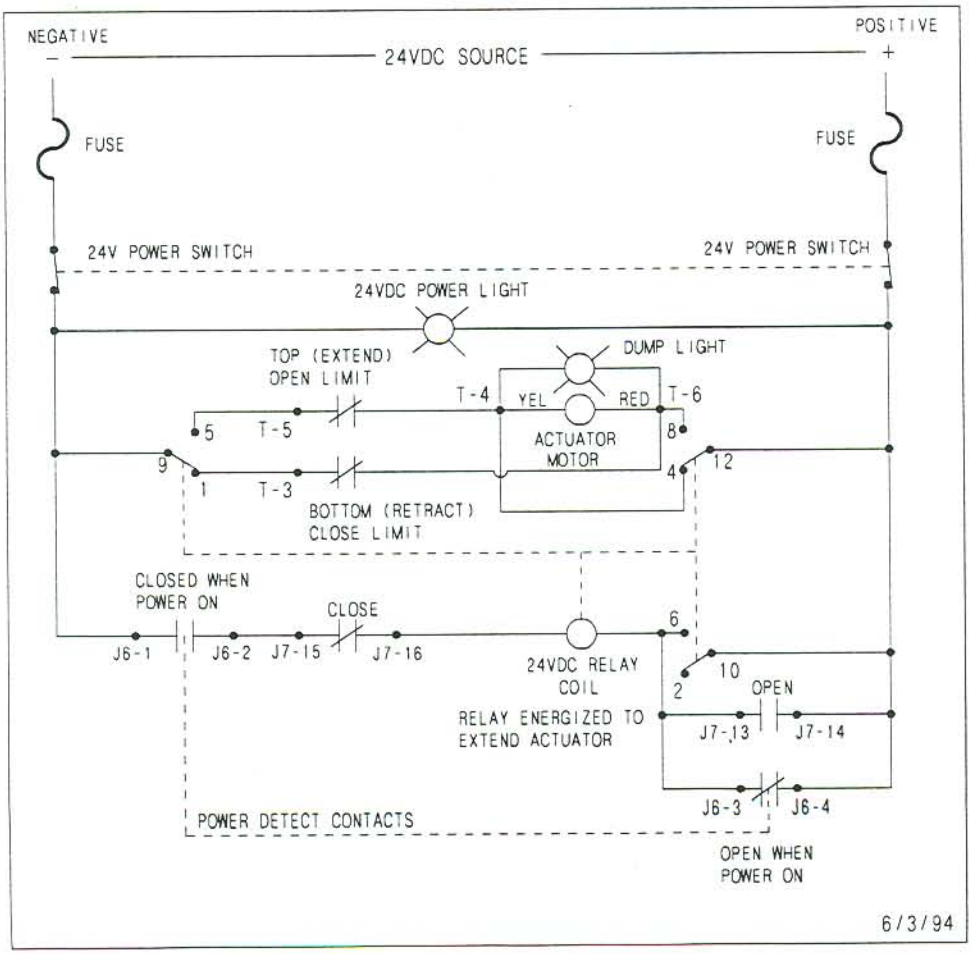

AUTOFLOW FILL SYSTEM INNER PANEL WIRING

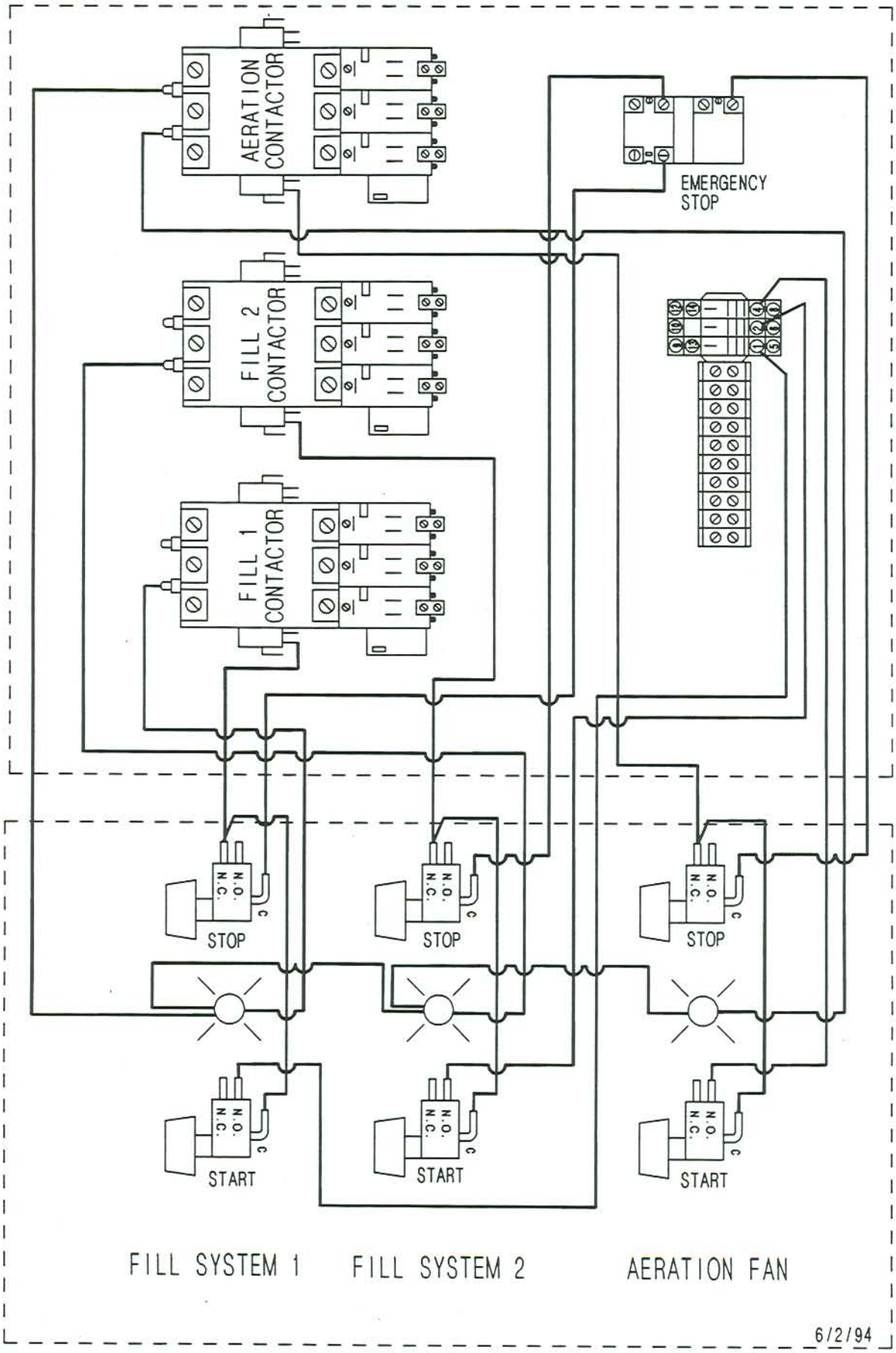

AUTOFLOW FILL SYSTEM CONTROL BACK PANEL

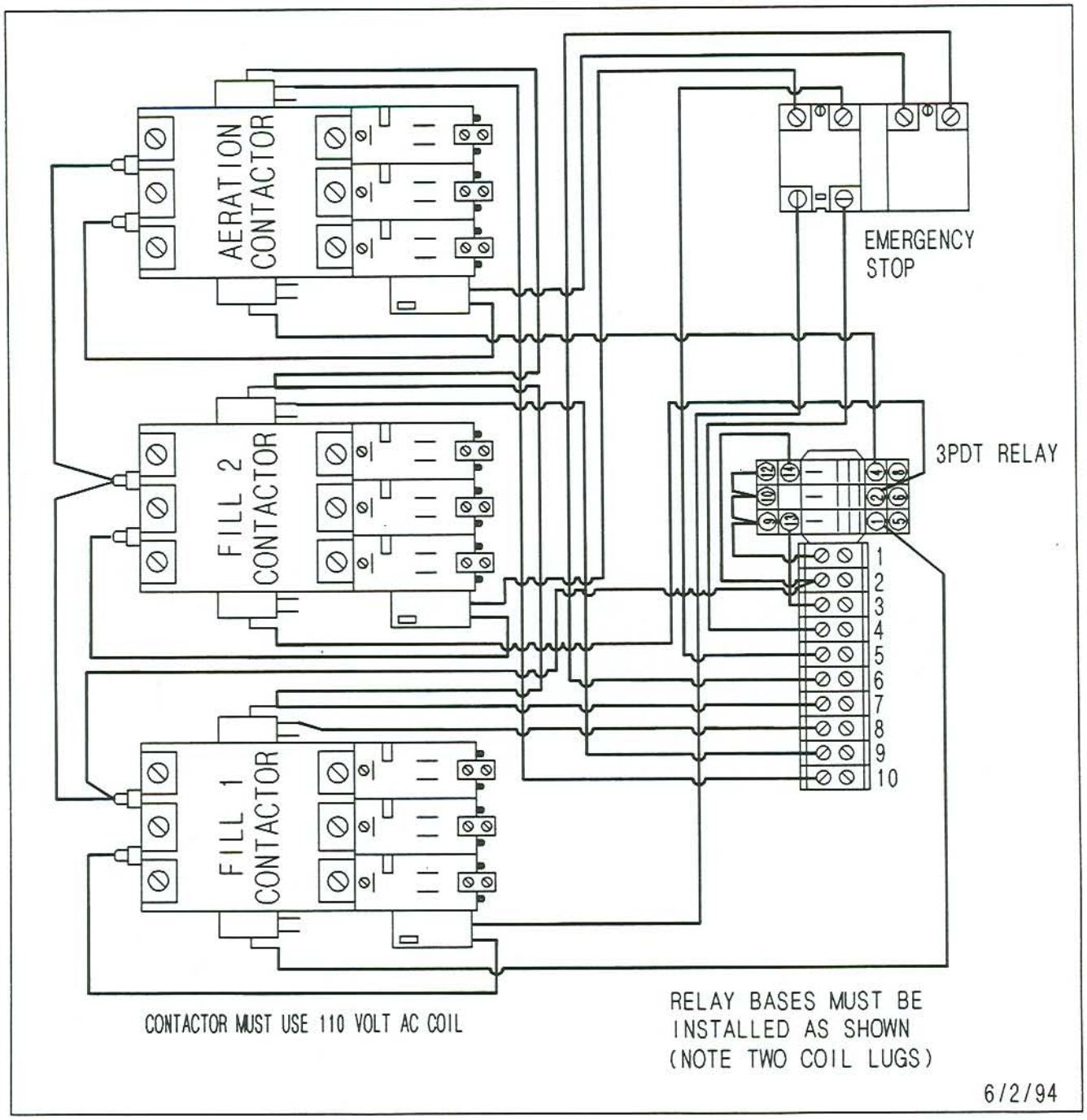

AUTOFLOW FAN/HEATER WIRING

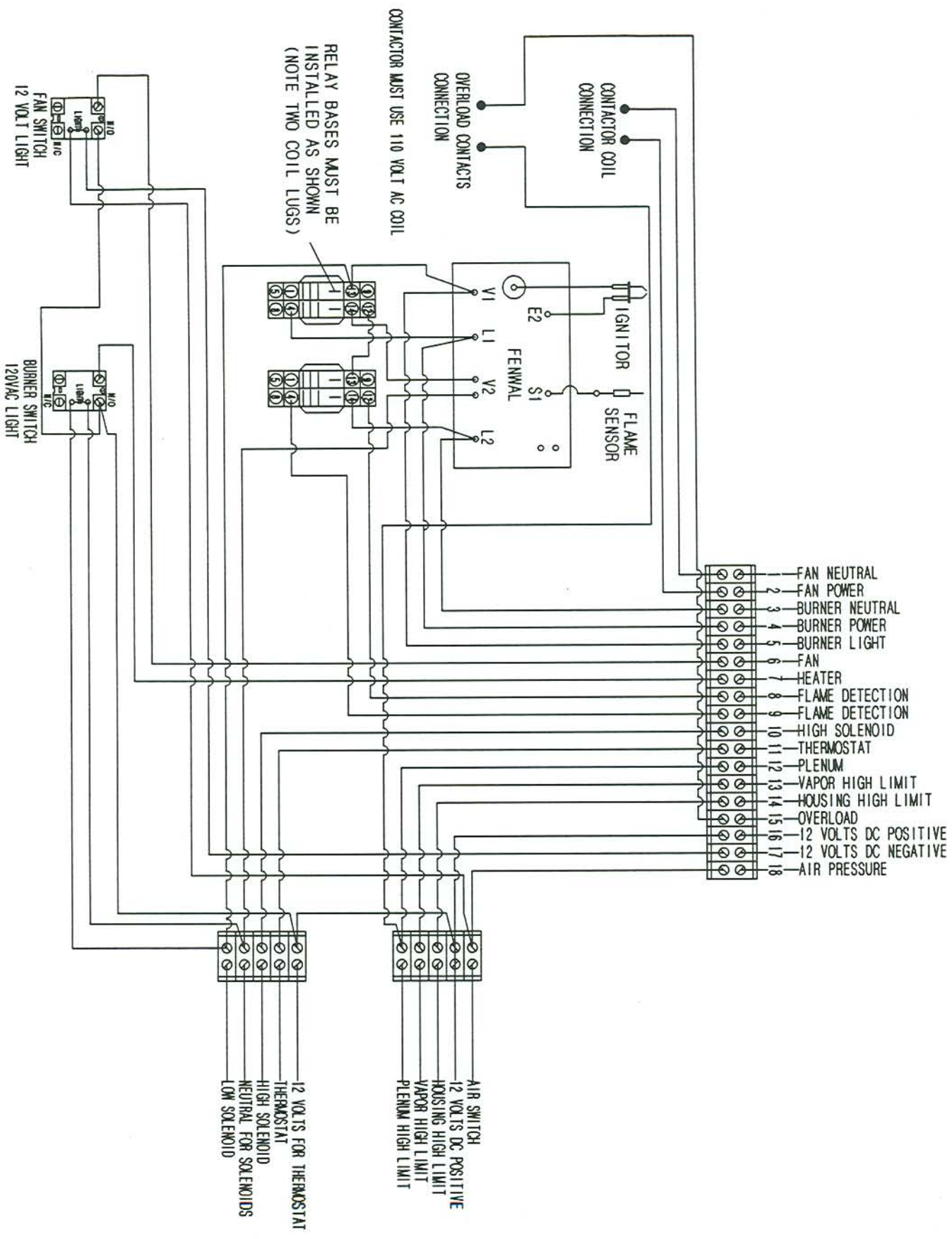

INPUT/OUTPUT BOARD TERMINAL IDENTICATION

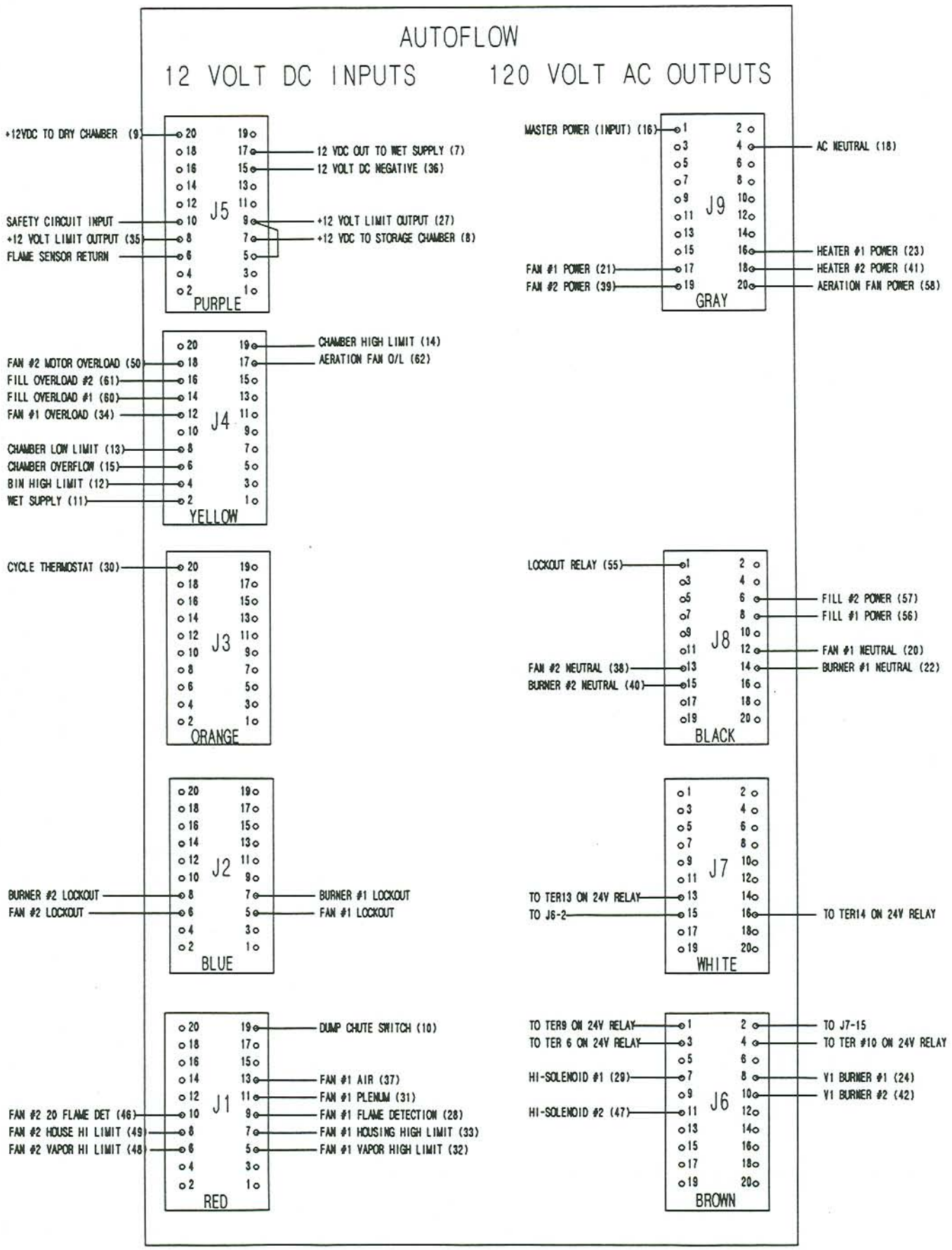

INPUT/OUTPUT BOARD TERMINAL IDENTICATION

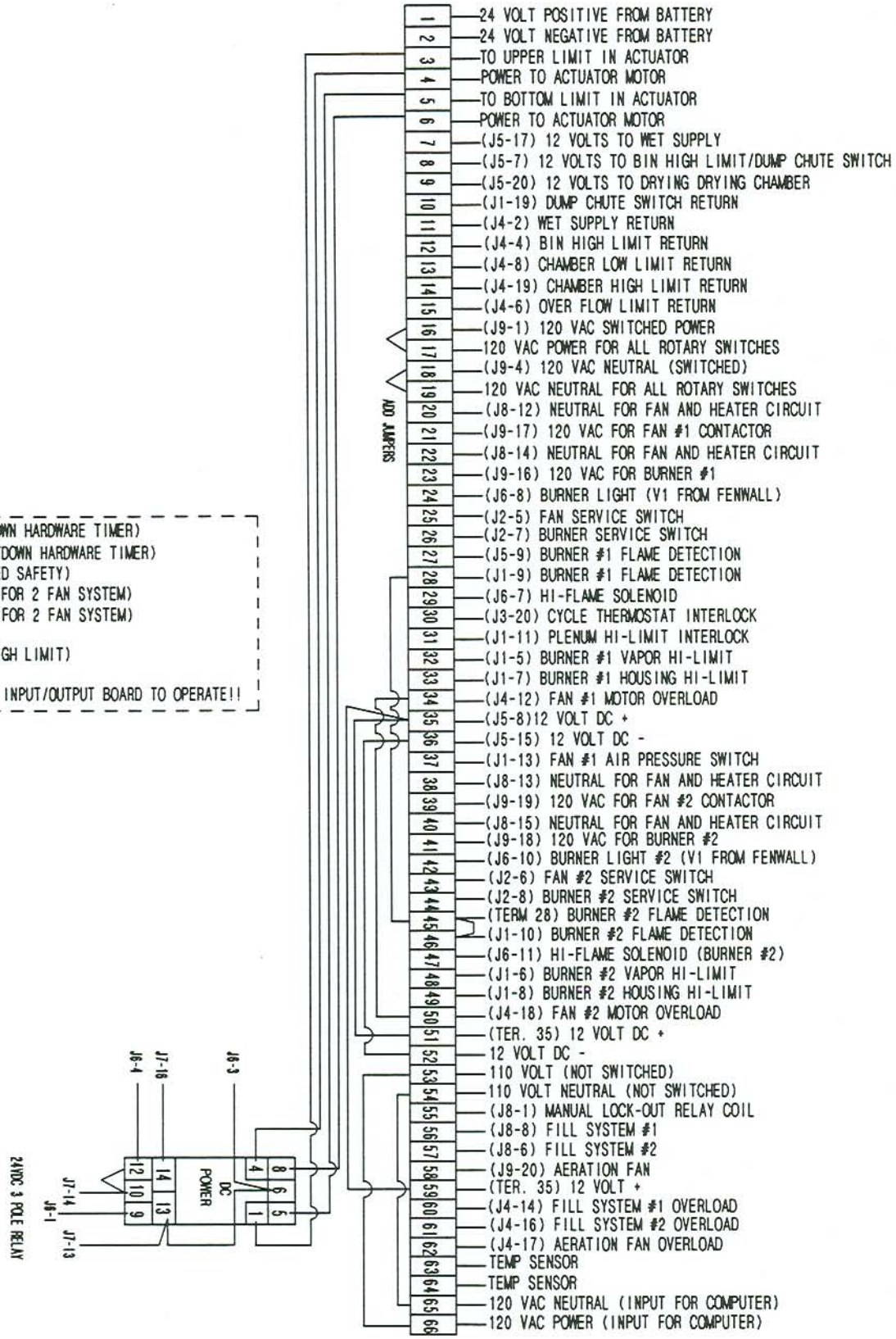

JUMPER J1-10 TO J5-6 (FLAME SHUTDOWN HARDWARE TIMER)
JUMPER J4-18 TO J5-10 (SAFETY SHUTDOWN HARDWARE TIMER)
JUMPER J1-20 TO J5-9 (USER SUPPLIED SAFETY)
JUMPER TERM 34 TO TERM 50 (REMOVE FOR 2 FAN SYSTEM)
JUMPER TERM 45 TO TERM 46 (REMOVE FOR 2 FAN SYSTEM)
JUMPER J6-2 TO J7-15 (16GA WIRE)
JUMPER J5-9 TO J5-5 (GRAIN TEMP HIGH LIMIT)
JUMPER TERM 28 TO TERM 45
JUMPERS MUST BE INSTALLED FOR THE INPUT/OUTPUT BOARD TO OPERATE!!

AUTOFLOW FRONT PANEL EXTERNAL WIRING

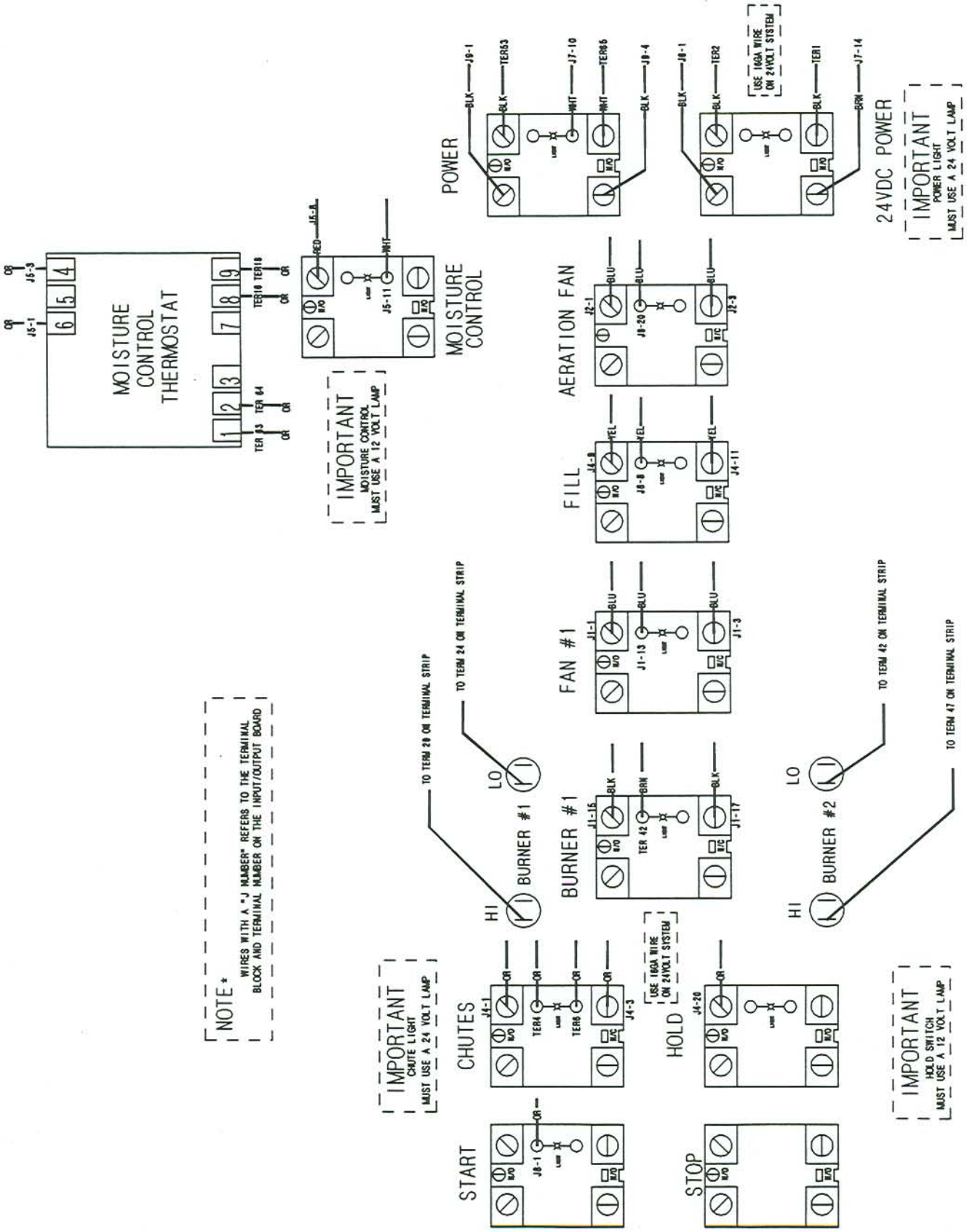
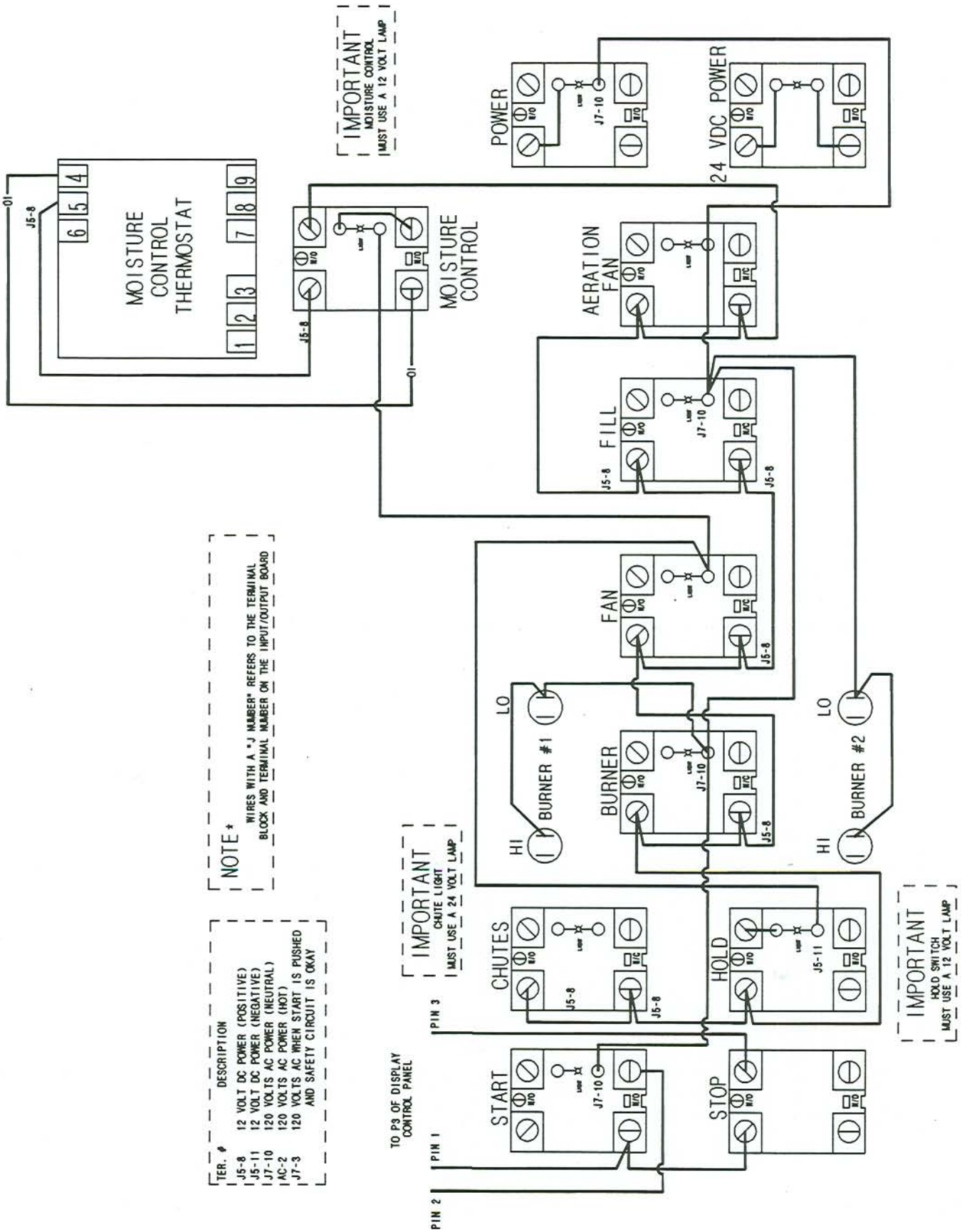
AUTOFLOW FRONT PANEL INTERNAL WIRING