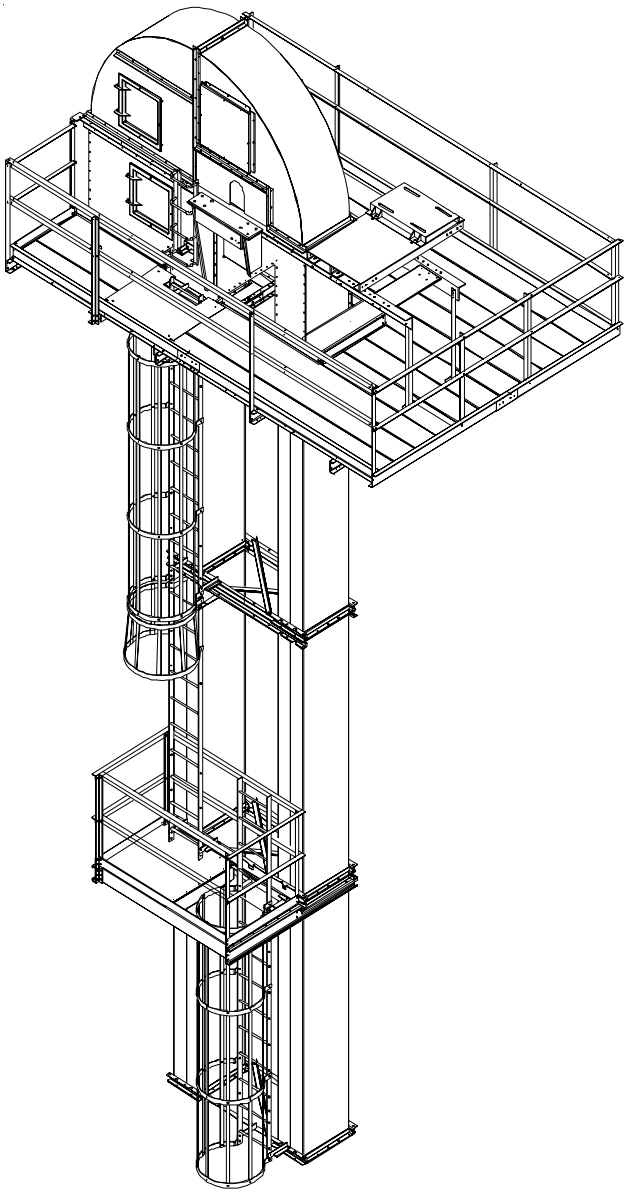

42" - 48"

Platform, Safety Cage, & Rest Platform

for Bucket Elevators

Installation Manual

PNEG-739

Revision Date: 10-16-2006

PNEG-739

Introduction

READ THIS MANUAL carefully to learn how to properly use and install equipment. Failure to do so could result in personal injury or equipment damage.

INSPECT the shipment immediately upon arrival. The Customer is responsible for ensuring that all quantities are correct. Report any damage or shortages by recording a detailed description on the Bill of Lading to justify the Customer's claim from the Transport Firm. Our responsibility for damage to the equipment ends with acceptance by the delivering carrier. Save all paperwork and documentation furnished with any of the equipment.

THIS MANUAL SHOULD BE CONSIDERED a permanent part of your equipment and should be easily accessible when needed.

WARRANTY is provided as part of the company's support program for customers who use and properly maintain their equipment. The warranty is explained on the warranty page located on the inside back cover of this manual.

This warranty provides you the assurance that the company will back its products where defects appear within the warranty period. In some circumstances, the company also provides field improvements, often without charge to the customer, even if the product is out of warranty. Should the equipment be abused, or modified to change its performance beyond the factory specifications, the warranty will become void and field improvements may be denied.

NOTE

When laying out the ladder, safety cage, and platforms be sure and always start from the head service platform and work your way down the leg. Keep in mind a rest platform needs to be located at every 30' of vertical descent (OSHA Standards).

⚠WARNING

ALL SERVICE ACCESSORIES ARE INTENDED FOR THE PROPER USE IN WHICH THEY WERE DESIGNED. ANY MISUSE OF THE EQUIPMENT OR ACCESSORIES WILL VOID THE WARRANTY. MISUSE CAN CAUSE FAILURE, SEVERE INJURY OR DEATH TO THE USER. THE MANUFACTURER CANNOT BE RESPONSIBLE FOR THE ERECTION OR USE OF THE BUCKET ELEVATOR AND IT'S ACCESSORIES.

Use of the Equipment Information page will help you identify your equipment in the case that you need to call your dealer or installer. This information should be filled out and kept on record.

Equipment Information

Model Number:_____

Serial Number:_____

Date Purchased:_____

Dealer/Distributor Name and Phone Number:

_____

_____

_____

_____

Material Handling
1004 East Illinois Street
Assumption, Illinois 62510 USA
Phone: (217) 226-4421
FAX: (888) 741-3004
e-mail: gsi@grainsystems.com

Table of Contents

Introduction 3
Equipment Information 4
Safety Guidelines 6
Decal Locations 9
SECTION 1 - 42" Head Service Platform 10
Support Channels 11
Inside Toeboards 12
42" Platform Decking 13
Outside Toeboards 14
41-3/4" & 47-3/4" Handrail Posts 15
47-3/8" Handrail Posts 16
Handrail & Vertical Support Angles 17
Handrail Retaining Clip 18
Hatch Access Door 19
SECTION 2 - 48" Head Service Platform 20
Cross Member Assembly 21
Toe Plates 22
Decking 23
Handrails and Handrail Posts 24
Handrail Angles 25
Hatch Access Door 26
Two Rung Ladder 26
Grab Bar Installation 27
SECTION 3 - Distributor Platform 28
Clamp Brackets 29
Distributor Platform Support and Brace Channels 30
Distributor Platform Toeboards 31
Distributor Decking and Toeboards 32
Handrail Posts and Handrail Angles 33
Cross Knee Braces 34
SECTION 4 - Safety Cage Assembly 35
Tie Angle Attachment 36
Tie Angle Dimensions 37
Ladder Standoff Attachment 38
Ladder Attachment 39
Safety Cage Hoop Assembly 40
Safety Cage Vertical Bar Attachment 41
Safety Cage Flare Attachment 42
SECTION 5 - Rest Platform Assembly 43
Installing Side Mounting Channels 44
Platform Corner Post 45
Front and Rear Mounting Channels 46
Center Support Channel 47
Rest Platform Deck Plate 48
Top and Mid Handrails 49
Kickplates 50

All information, illustrations, photos, and specifications in this manual are based on the latest information available at the time of publication. The right is reserved to make changes at any time without notice.

SAFETY GUIDELINES

This manual contains information that is important for you, the owner/operator, to know and understand. This information relates to protecting ***personal safety*** and ***preventing equipment problems***. It is the responsibility of the owner/operator to inform anyone operating or working in the area of this equipment of these safety guidelines. To help you recognize this information, we use the symbols that are defined below.
Please read the manual and pay attention to these sections. Failure to read this manual and it's safety instructions is a misuse of the equipment and may lead to serious injury or death.

This is the safety alert symbol. It is used to alert you to potential personal injury hazards. Obey all safety messages that follow this symbol to avoid possible injury or death.

⚠ DANGER — **DANGER** indicates an imminently hazardous situation which, if not avoided, will result in death or serious injury.

⚠ WARNING — **WARNING** indicates a potentially hazardous situation which, if not avoided, could result in death or serious injury.

⚠ CAUTION — **CAUTION** indicates a potentially hazardous situation which, if not avoided, may result in minor or moderate injury.

CAUTION — **CAUTION** used without the safety alert symbol indicates a potentially hazardous situation which, if not avoided, may result in property damage.

NOTE — **NOTE** indicates information about the equipment that you should pay special attention to.

FOLLOW SAFETY INSTRUCTIONS

Carefully read all safety messages in this manual and on your machine safety signs. Keep signs in good condition. Replace missing or damaged safety signs. Be sure new equipment components and repair parts include the current safety signs. Replacement safety signs are available from the manufacturer.

Learn how to operate the machine and how to use controls properly. Do not let anyone operate without instruction.

Keep your machinery in proper working condition. Unauthorized modifications to the machine may impair the function and/or safety and affect machine life. All service accessories are intended for the proper use in which they were designed. Any misuse of the equipment or accessories will void the warranty. Misuse can cause failure, severe injury or death to the user. The manufacturer cannot be responsible for the erection or use of the bucket elevator and it's accessories.

If you do not understand any part of this manual and need assistance, contact your dealer.

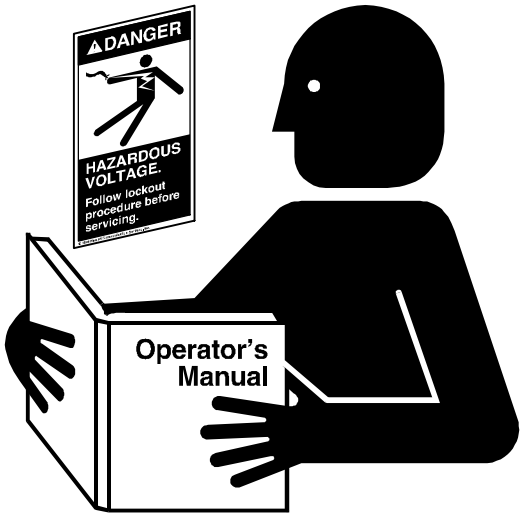

PRACTICE SAFE MAINTENANCE

Understand service procedures before doing work. Keep area clean and dry.

Never lubricate, service, or adjust machine while it is in operation. Keep hands, feet, and clothing from rotating belt and idlers.

Keep all parts in good condition and properly installed. Fix damage immediately. Replace worn or broken parts. Remove any build up grease, oil, or debris.

PREPARE FOR EMERGENCIES

Be prepared if fire starts.

Keep a first aid kit and fire extinguisher handy.

Keep emergency numbers for doctors, ambulance service, hospital, and fire department near your telephone.

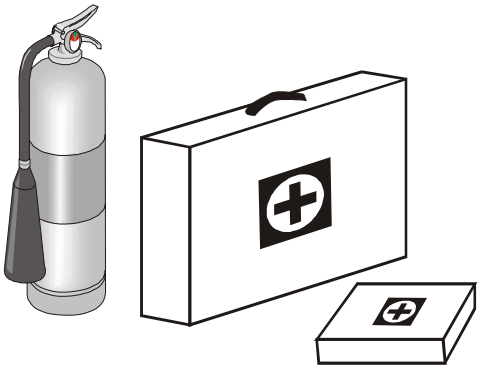

WEAR PROTECTIVE CLOTHING

Wear close fitting clothing and safety equipment appropriate to the job.

Safety glasses should be worn at all times to protect eyes from debris.

Wear gloves to protect your hands from sharp edges on plastic or steel parts.

A respirator may be needed to help prevent breathing potentially toxic fumes and dust.

Wear hard hat and steel toe boots to help protect your head and toes from falling debris.

Eye Protection

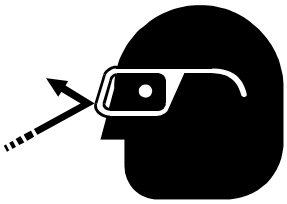

Gloves

Steel Toe Boots

Respirator

Hard Hat

DECAL LOCATIONS

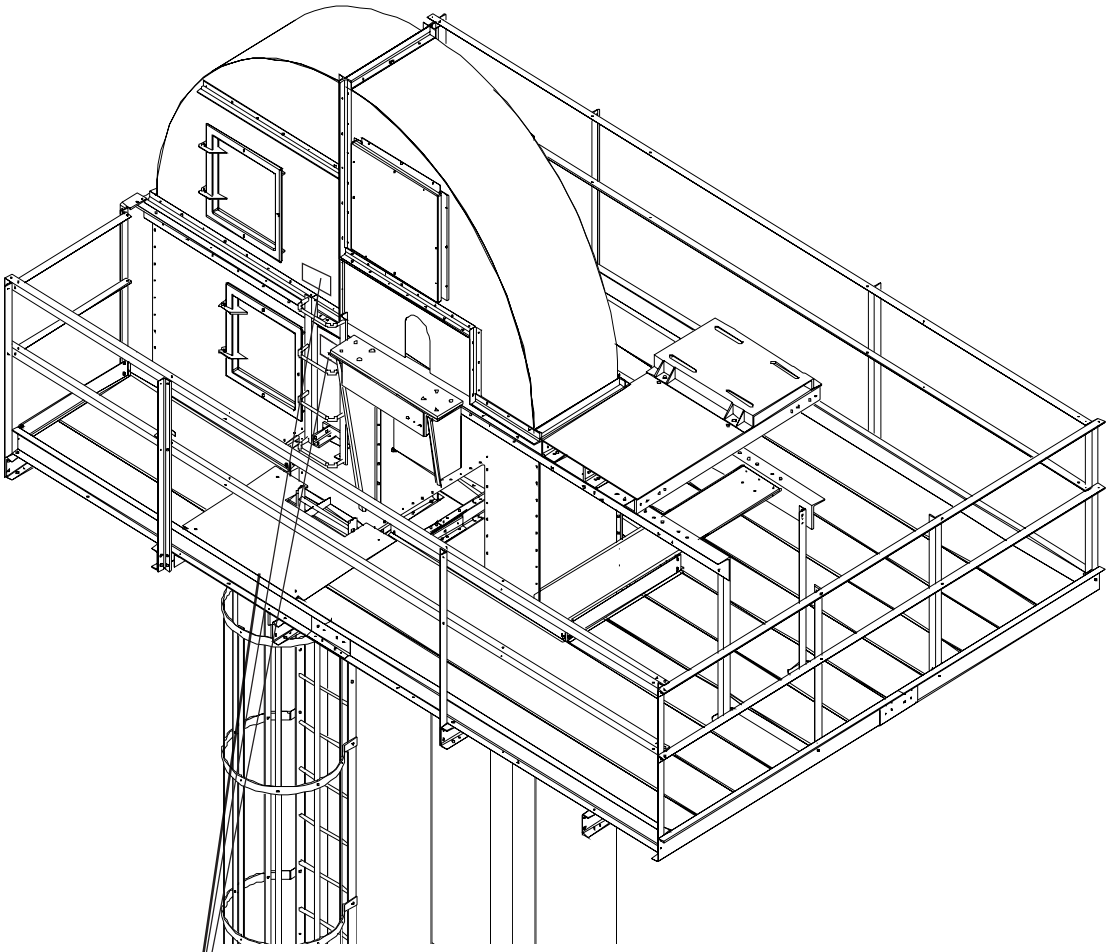

Decal located on bottom of platform access door and on the side of the Head Assembly.

DC-1568

SECTION 1

42" HEAD SERVICE PLATFORM

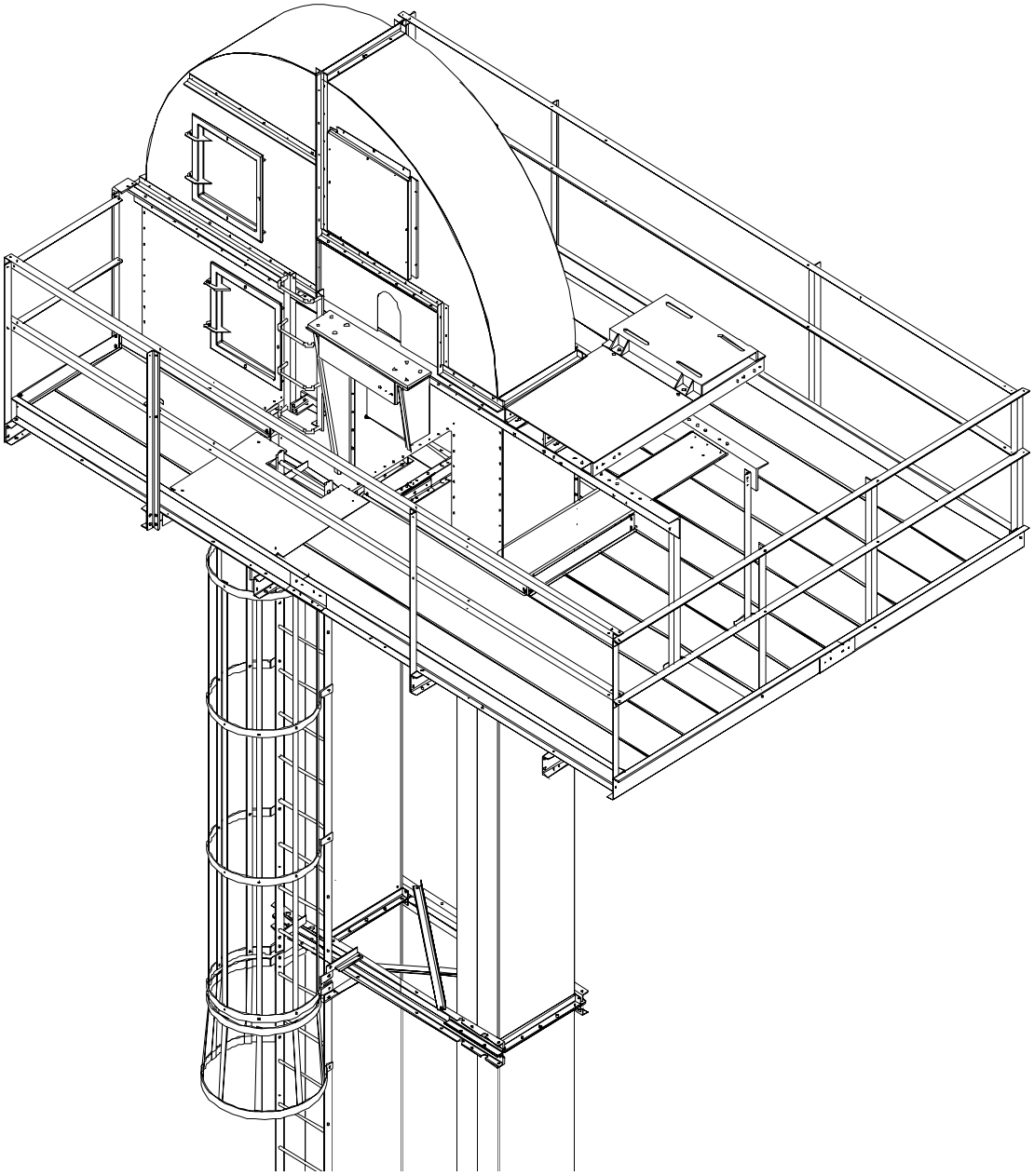

Support Channels

Take time now and review all instructions and drawings before attempting to assemble the platform. Layout all parts for easy identification. Determine if the shaft will extend to the left or right hand side of the platform. The long side of the support channels must extend to the **shaft side** of the head. Start the head service platform assembly by attaching two support channels to the head platform brackets using 1/2" x 1" hex bolts. (See Figure 1-1.)

NOTE

For entire platform assembly, use carriage bolts at slot-to-hole connections and hex head cap screws at hole-to-hole connections.

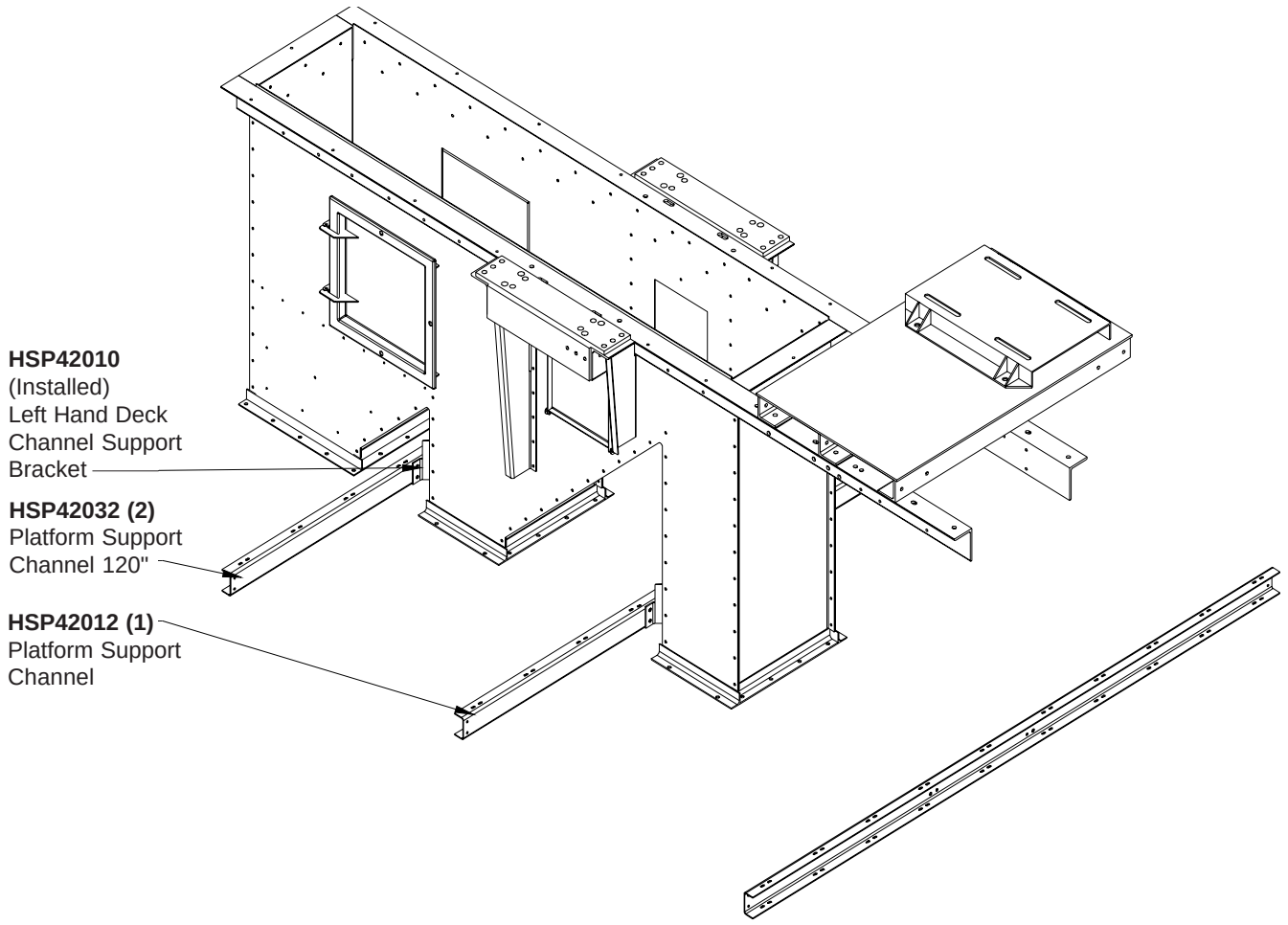

FIGURE 1-1

Inside Toeboards

Place the side toeboards next to the head assembly on top of the support channels as shown in Figure 1-2. The end platform support channel must be placed below the two side toeboards. Attach the toeboards to the support channels with the 5/16" x 1" hex bolts supplied. Tighten all hardware in this assembly.

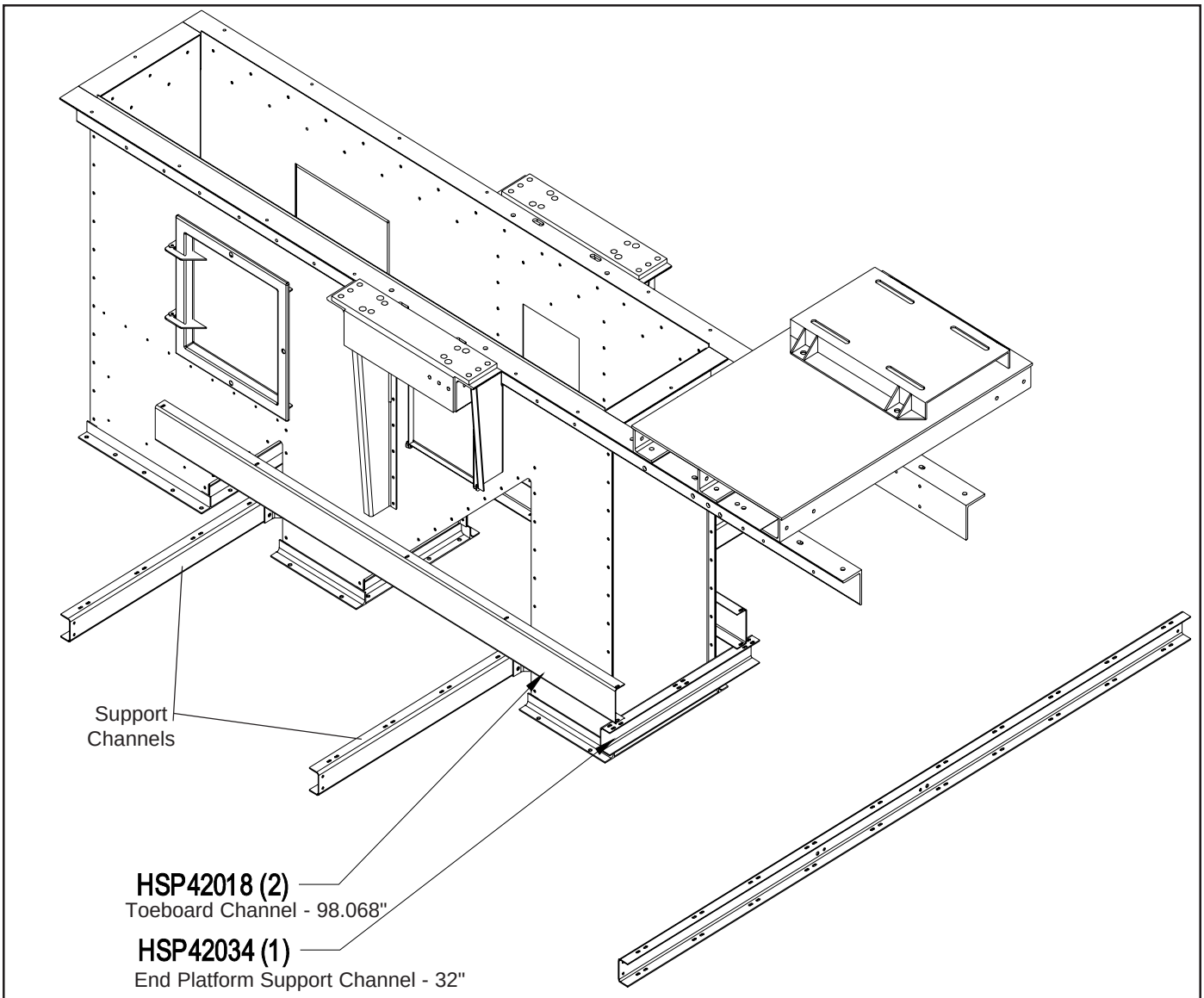

FIGURE 1-2

42" Platform Decking

Layout all floor deck panels according to position on platform (Figure 1-3). Remember to layout for right hand (standard) or left hand shaft. Attach floor panels to support channels (as shown in Figure 1-3) using 5/16" x 1" carraige bolts and 5/16" nuts.

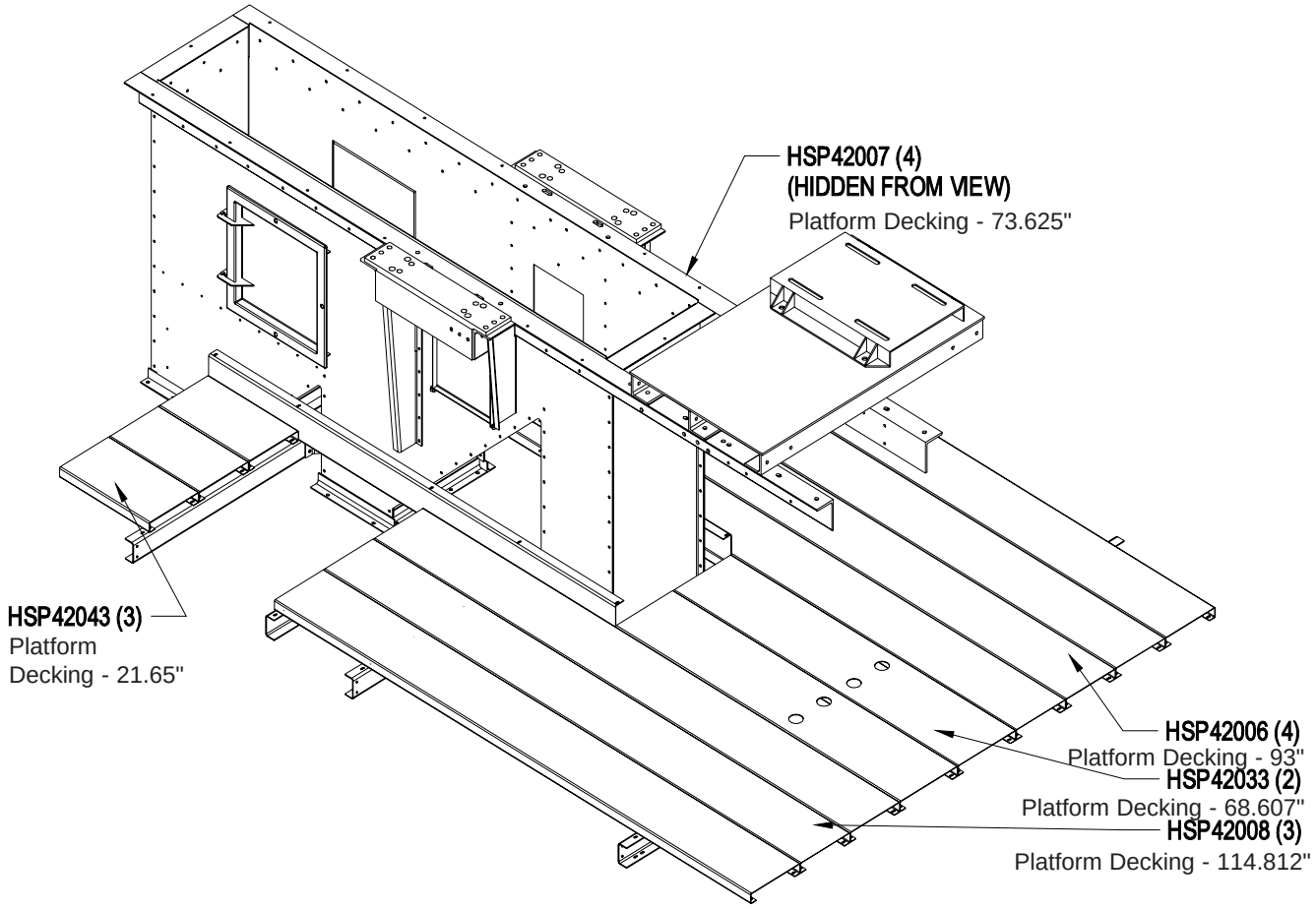

NOTE: This layout is for a RIGHT hand drive setup.

FIGURE 1-3

Outside Toeboards

Attach support channel, HSP42042, to underside of floor panels at the hatch opening (Figure 1-4). Small floor panels may be left off until the outside toeboards are attached. Use the 5/16" x 1" hex bolts during this assembly. Attach toeboards to the ends of the deck panels and to the support channels as shown in (Figure 1-4). Be sure and use splice channel on side toe boards. Tighten all hardware.

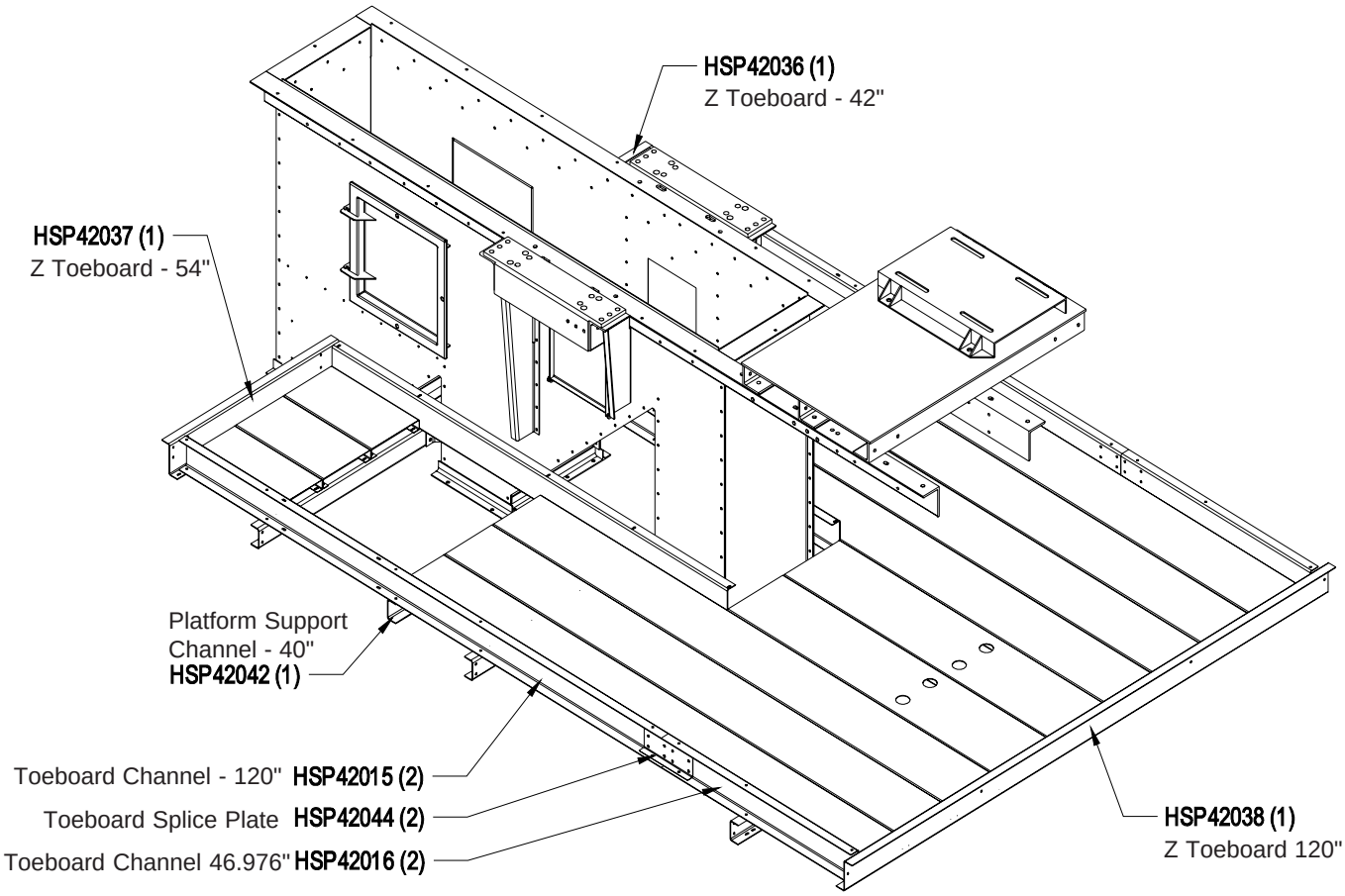

FIGURE 1-4

41-3/4" & 47-3/4" Handrail Posts

Attach short handrail posts to toeboards using the 5/16" hardware as shown in Figure 1-5. There are different lengths of handrail posts, so be sure and use the (6) 41- ¾" lengths on the outside and the 47-3/4" lengths next to the head as noted in Figure 1-5.

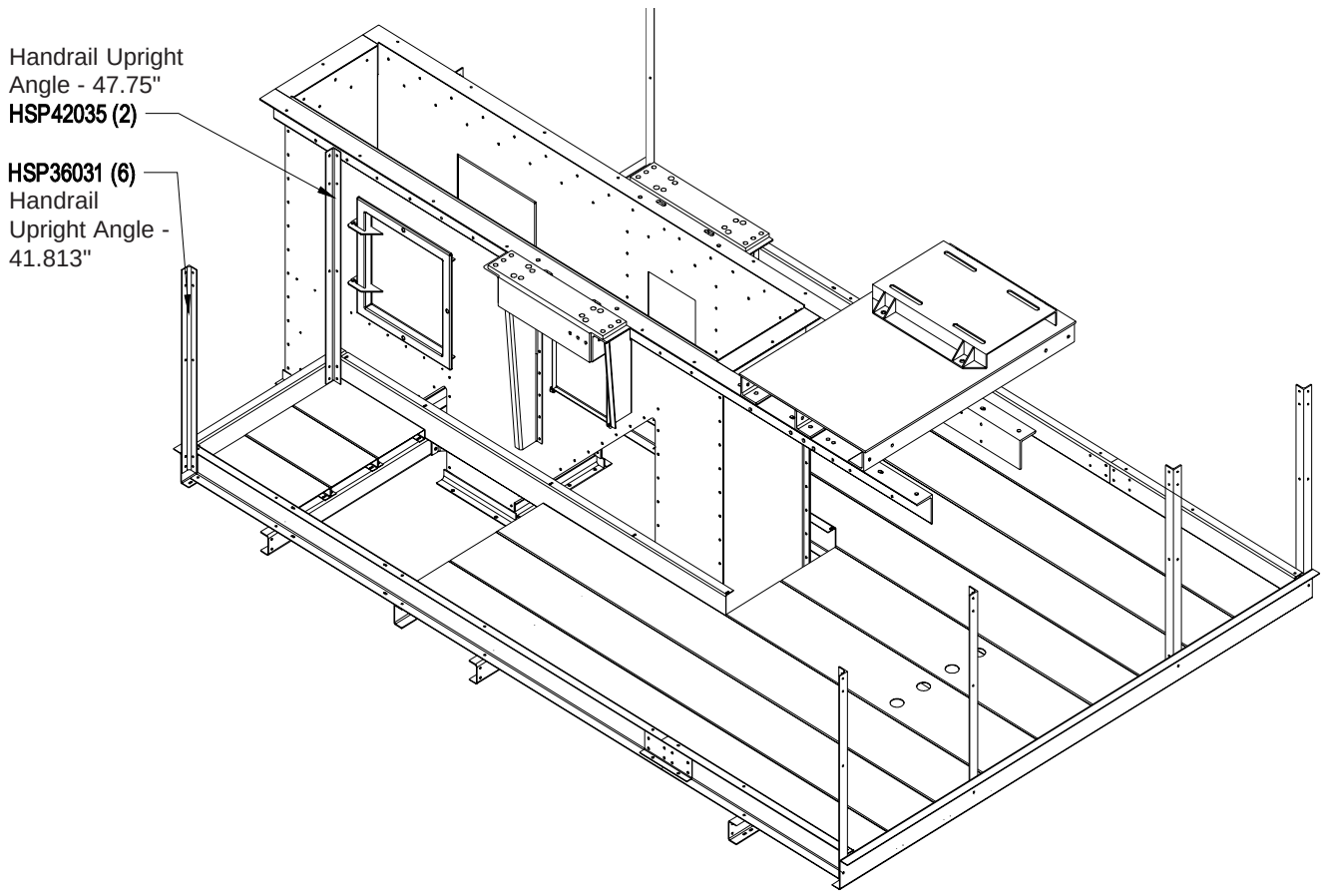

FIGURE1-5

47-3/8" Handrail Posts

Attach long handrail posts to the support channels using 5/16" x 1" hex bolts as shown in Figure 1-6. Be sure and use the longer 47-3/8" handrail posts for this assembly.

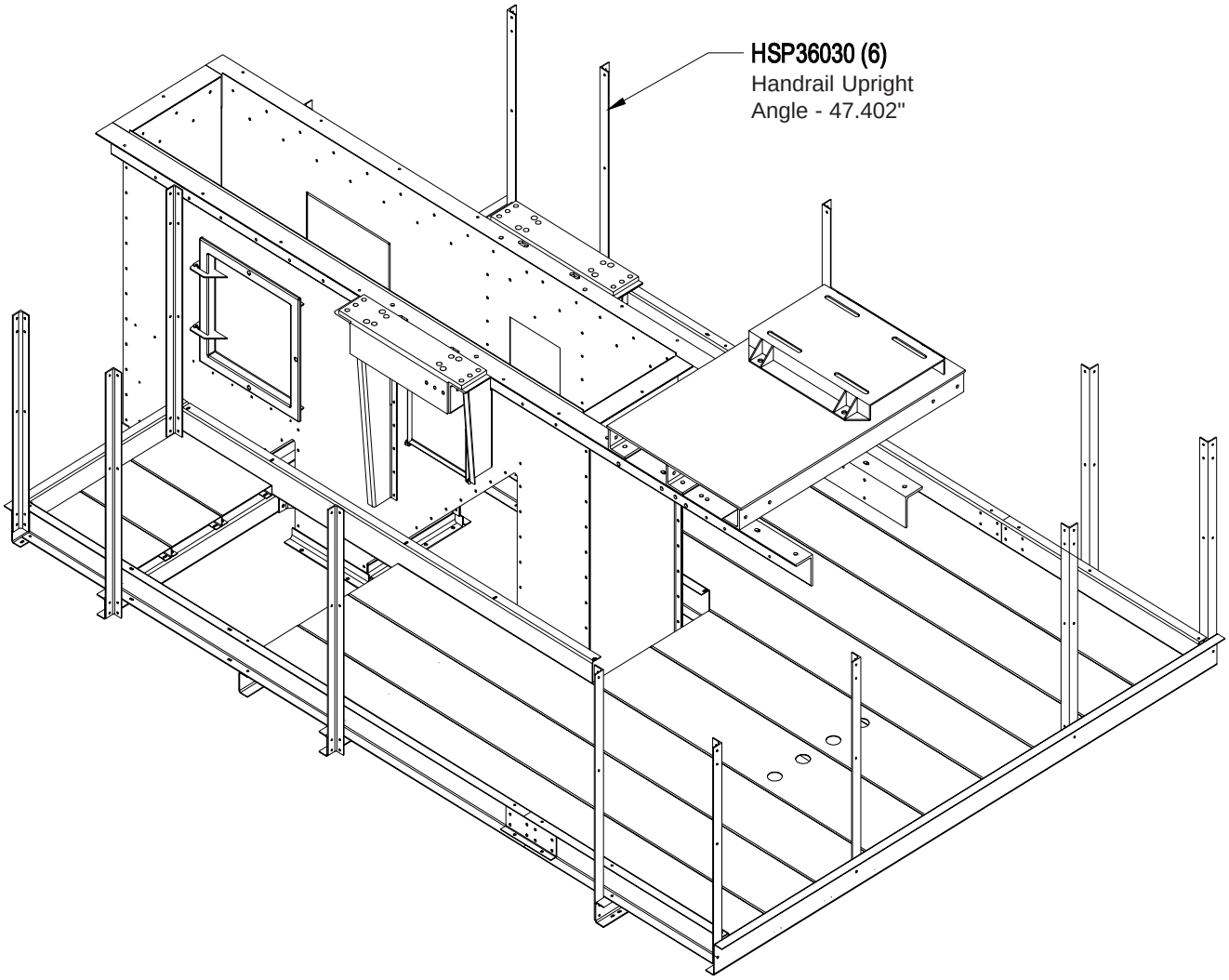

FIGURE 1-6

Handrail & Vertical Support Angles

Attach platform hatch latch assembly, GSB30120, to handrail as shown, using 5/16" x 1" hex bolts. Locate all handrail angles and attach to the handrail posts, as shown in Figure 1-7, using the 5/16" hardware. Attach the two deck channel support angles, HSP42014, to the rear of the head angles and to the support channel through the holes provided in the center decking uisng 3/8" x 1" hex bolts.

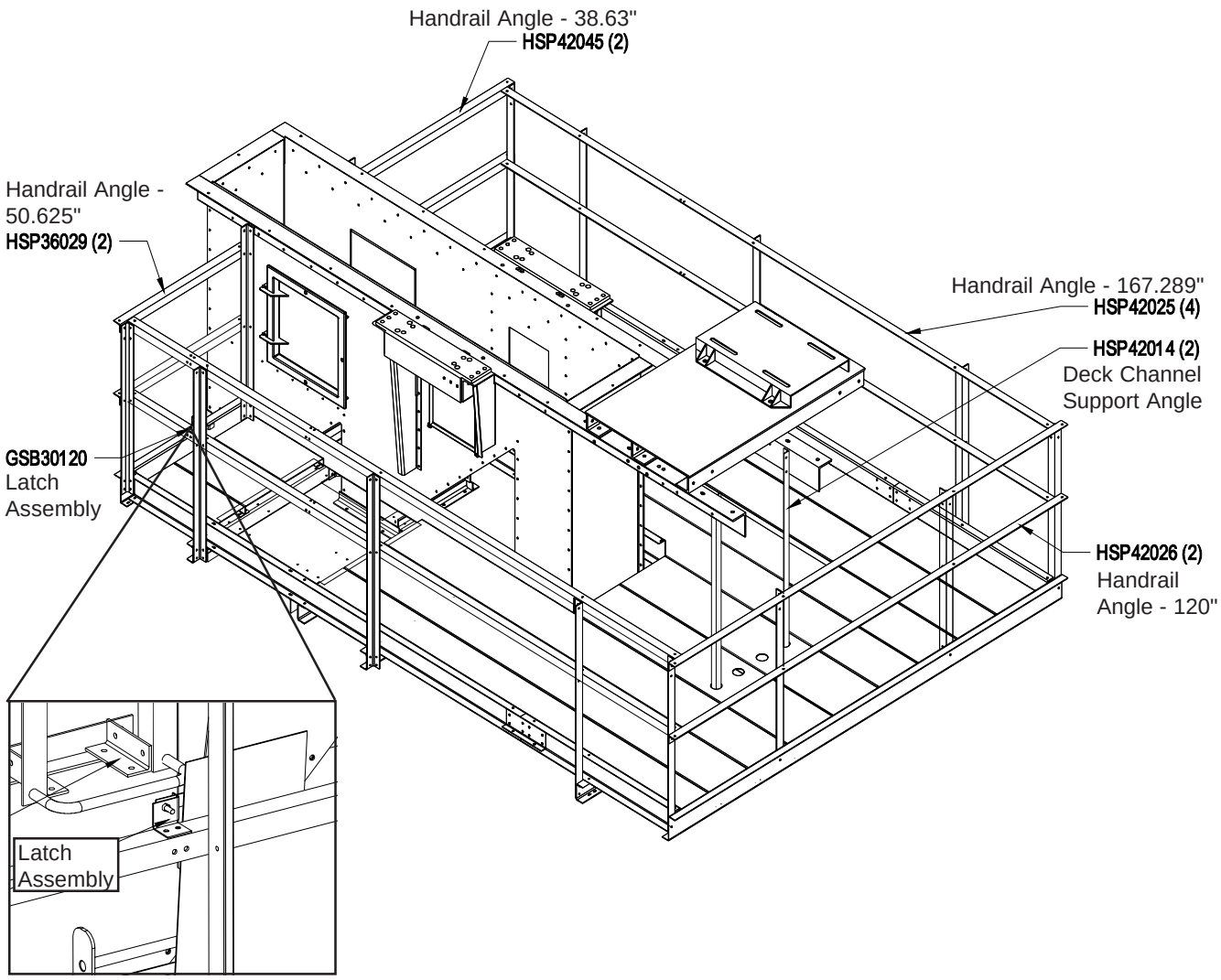

FIGURE 1-7

Handrail Retaining Clip

Attach the two HSP36027 handrail support clips to the handrail uprights next to the head bearing angle on the discharge end of head as shown in Figure 1-8. Field drill the hole in each head bearing angle and attach using the 5/16" x 1" hex bolts supplied.

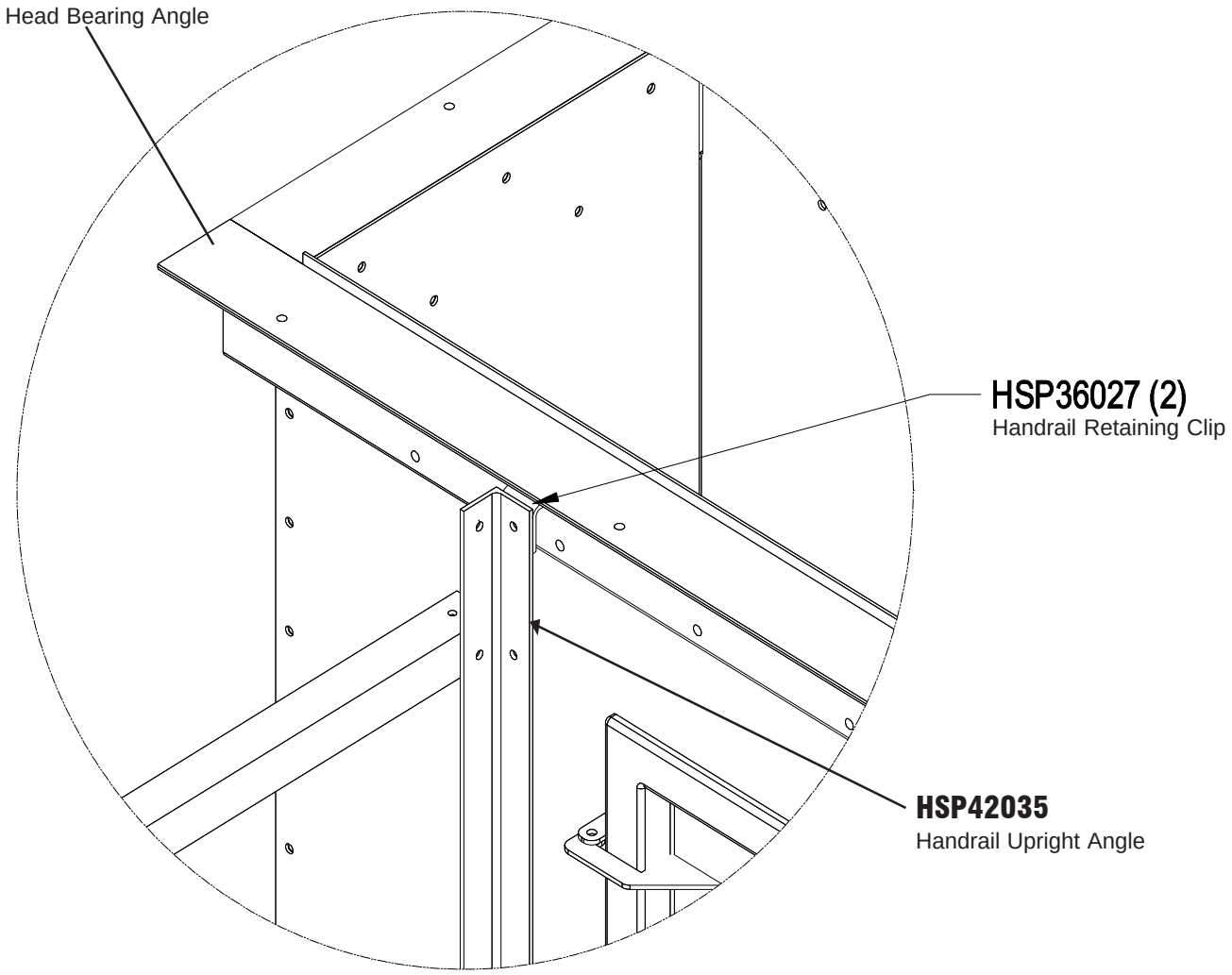

FIGURE 1-8

Hatch Access Door

Assemble the deck hatch access door by attaching the left and right hand hinges to bottom side of the outside toeboard, using 5/16" x 1" carraige bolts. Leave hardware loose until the assembly is complete. Attach the hinges & hatch decking to the angle frame weldment and double nut the hinge bolts - do not overtighten. (See Figure 1-9)

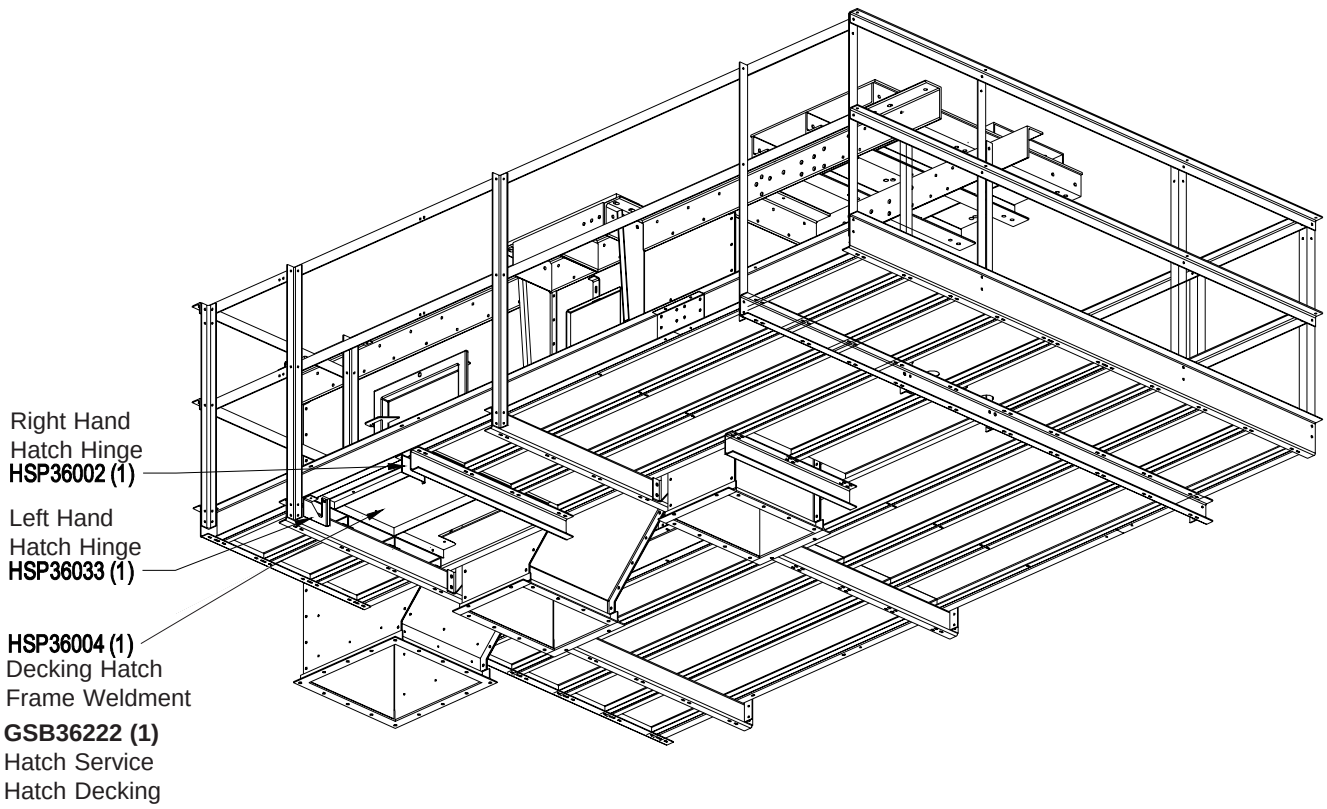

FIGURE 1-9

SECTION 2

48" HEAD SERVICE PLATFORM

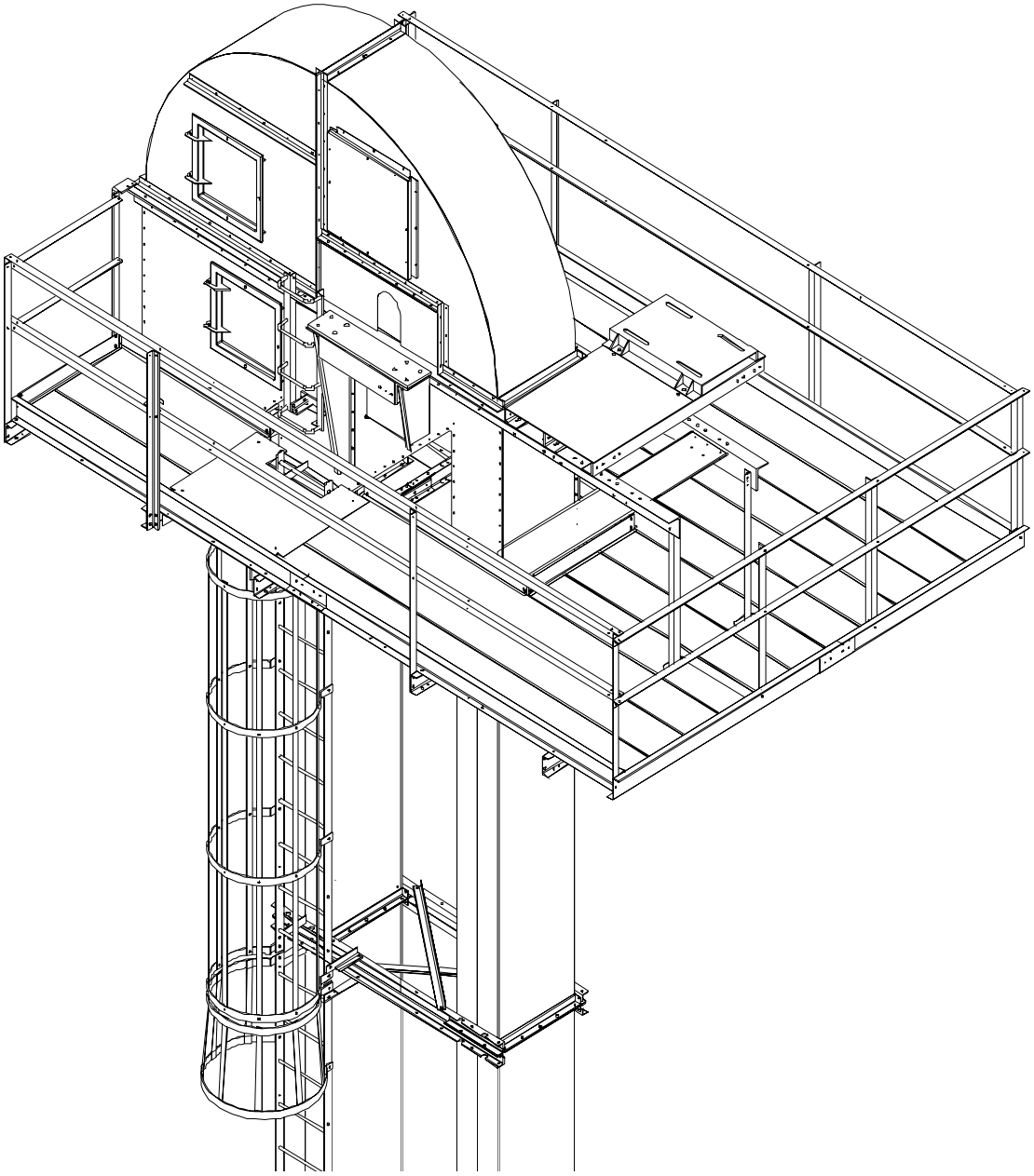

Mainframe & Cross Member Assembly

Before attempting any assembly of the platform, read and follow all directions. Lay out all parts associated with the assembly. Due to the assembly of the head service platform, the lower head assembly may need to be blocked up under the head and discharge flanges approximately 12" to provide clearance for assembly. Look at the head assembly to determine the drive side, which will be the wide side of platform.

First, attach the left and right mainframe assemblies to the head using 1/2" x 1" hex bolts.

Then attach the cross members to the mainframe assemblies with the long end of channels extending towards the drive side, use the ½" x 1" hex bolts supplied. (See Figure 2-1)

NOTE

The middle cross member HSP48x106 has a double hole pattern. Be sure to orientate the cross members according to Figure 2-1. Right Drive platform layout shown in all figures.

NOTE

When items with more than one part# are shown you will only use the one relevant to your service platform. Example: HSP482xxx single row 48" elevator, HSP484xxx double row 38"- 42" wide 48" elevator, HSP485xxx double row 50" wide 48" elevator.

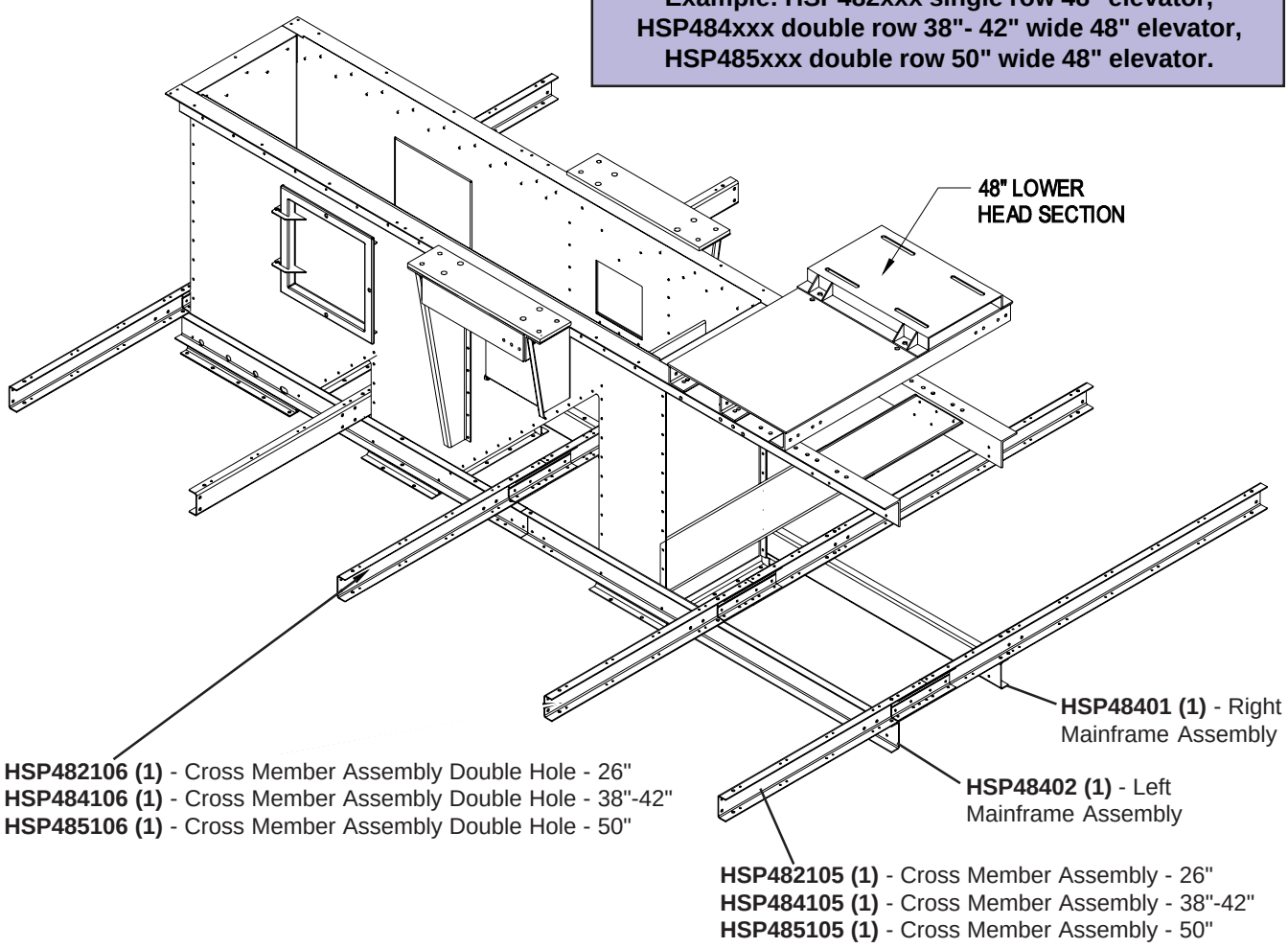

FIGURE 2-1

Toe Plates

Now that cross members are attached to head assembly, the toe board channel assemblies (HSP484117) can be attached to the ends of the cross members using 1/2" x 1" hex bolts. After both toe board channels are in place the Z-board channels (HSP48x121) can be placed on the end of the toe board channels and bolted in place using 3/8" x 1" hex bolts. Now tighten all hardware. Attach the (8) toe guard mounting angles (HSP484024) to the cross members then attach the inner toe boards to the angles using 1/2" x 1" hex bolts. The inboard mounting for toe board HSP484036 – HSP484037 will be done when the hand rail post are assembled. (See Figure 2-2)

NOTE

The lower head assembly has been removed from figure below to help clarify the assembly process.

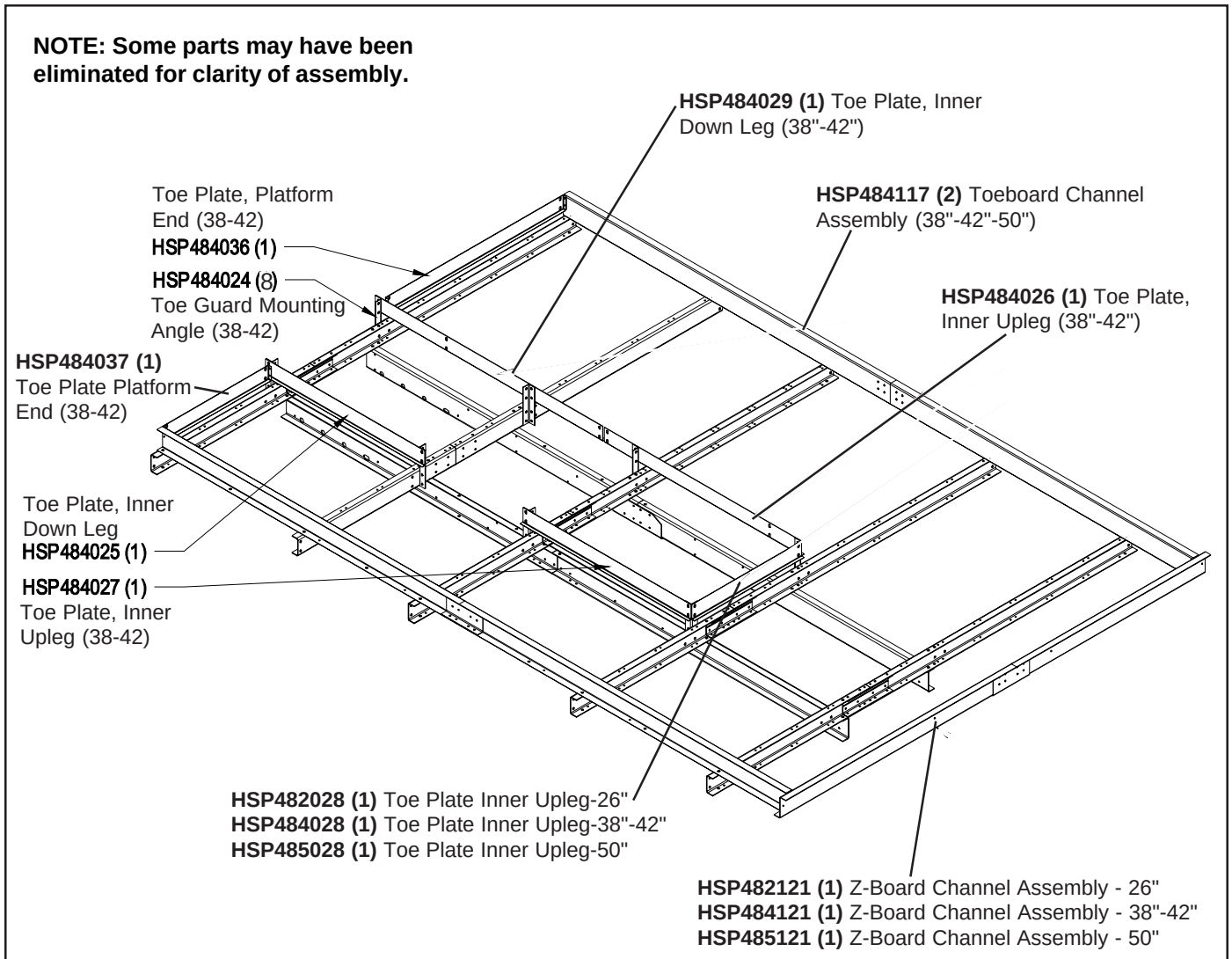

FIGURE 2-2

Decking

With all support channels in place and hardware tightened, locate all floor deck panels. Position the floor deck panels onto the support channels as shown below. Use the 5/16" x 1" carriage bolts to attach ends of the deck panels to the support channels. (See Figure 2-3)

NOTE

The quantity of HSP484013 will be determined by the width of the service platform. SP-4826 = 1, SP-483842 = 2, SP-4850 = 3.

NOTE: Some parts may have been eliminated for clarity of assembly.

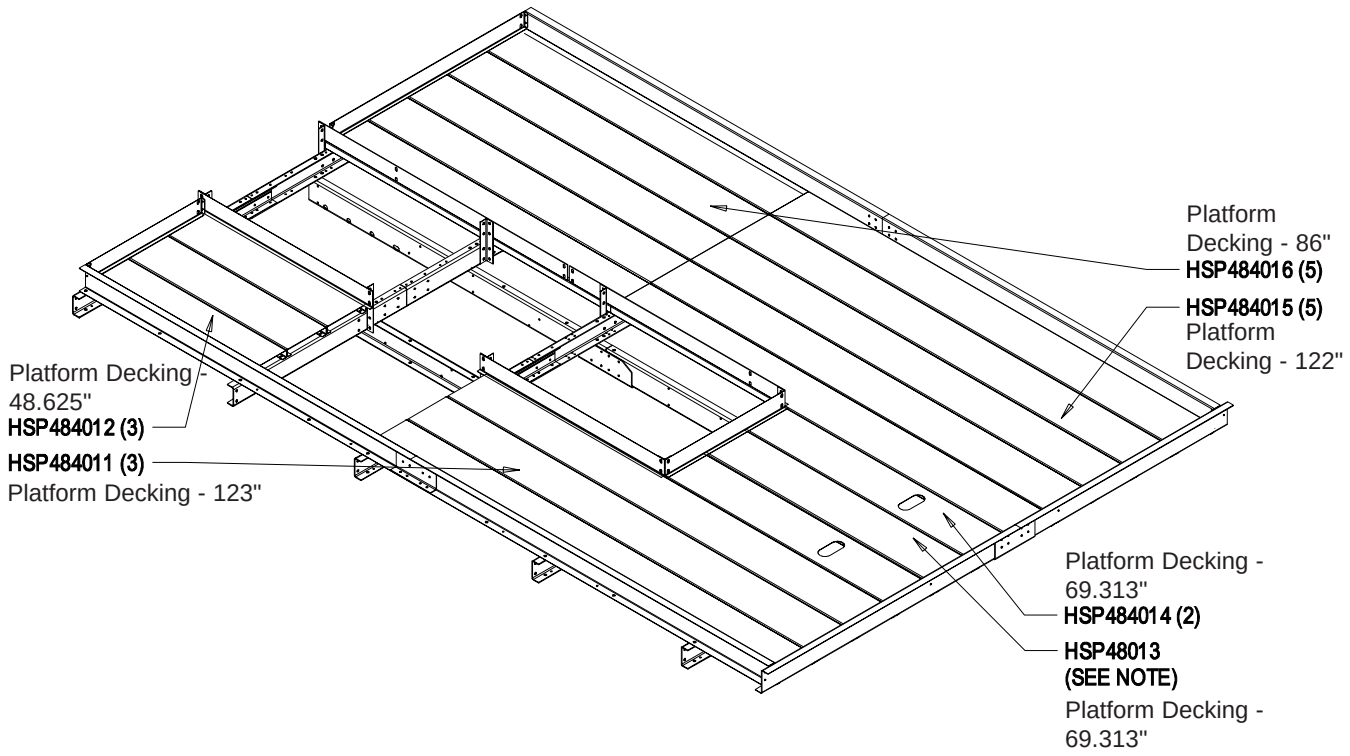

NOTE: HSP48013 can have up to 5 planks depending on the size of platform.

FIGURE 2-3

Handrails and Handrail Posts

Bolt all handrail posts to the cross members and Z board channels. Post that attach to cross members will use 1/2" hardware, post that attach to the Z board will use 3/8" hardware. Leave all hardware loose until all posts and handrails are in place. With all post in place attach hand rails with 3/8" hardware. Review Figure 2-4 for proper placement of post and handrails. HSP 484040 posts are attached to Z-board channel only.

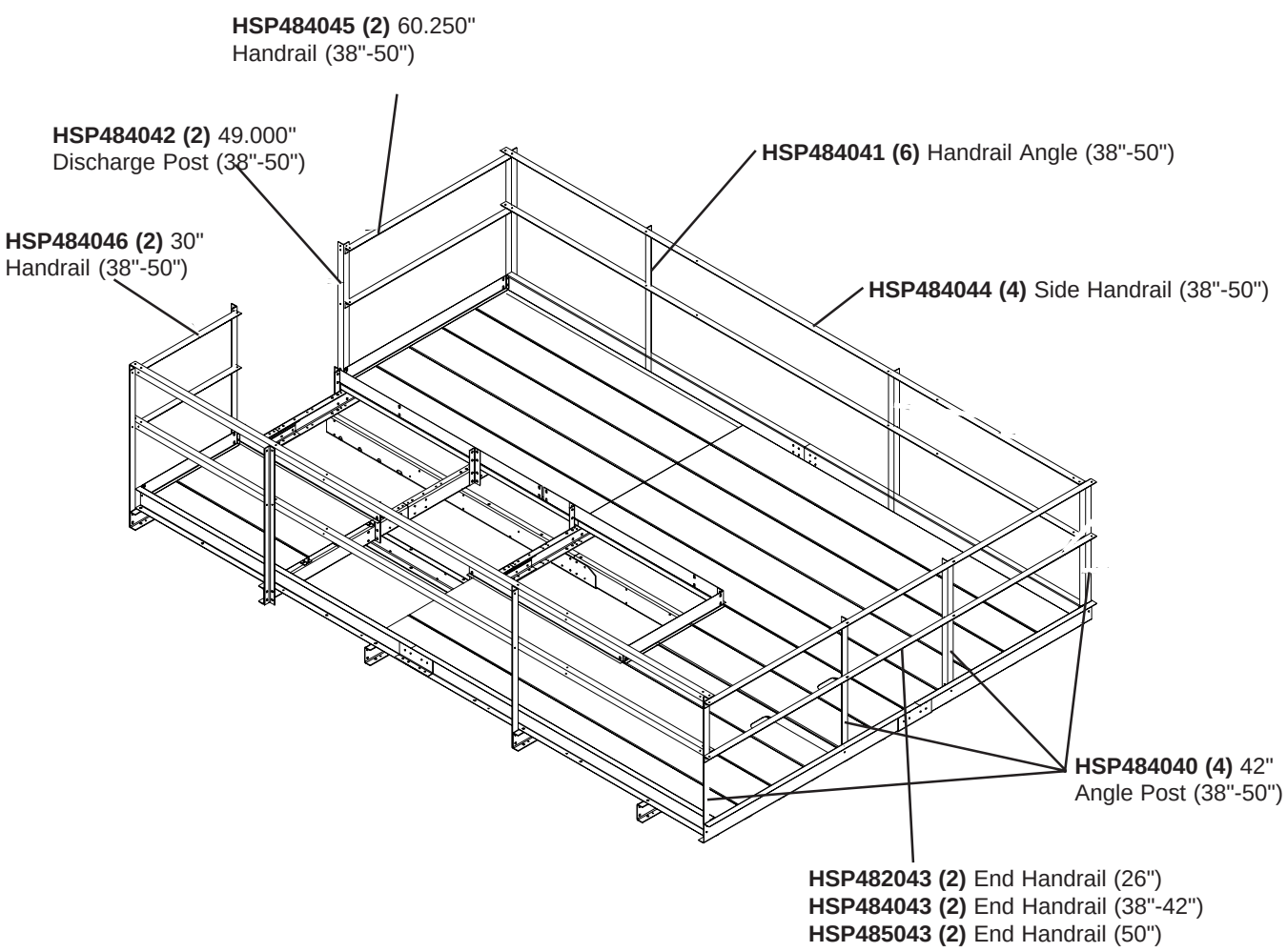

FIGURE 2-4

Handrail Angles

Attach HSP484047 and HSP484048 handrail attachment angles to the post next to the head bearing angle on the discharge end of the lower head (Figure 2-5) Field drill the hole in each head bearing angle and use 3/8" x 1" hex bolts supplied.

Attach the two service platform support angles, HSP484038, to rear of head angles and to the support channel through the holes provided in the center decking using 3/8" x 1" hex bolts. (See Figure 2-5)

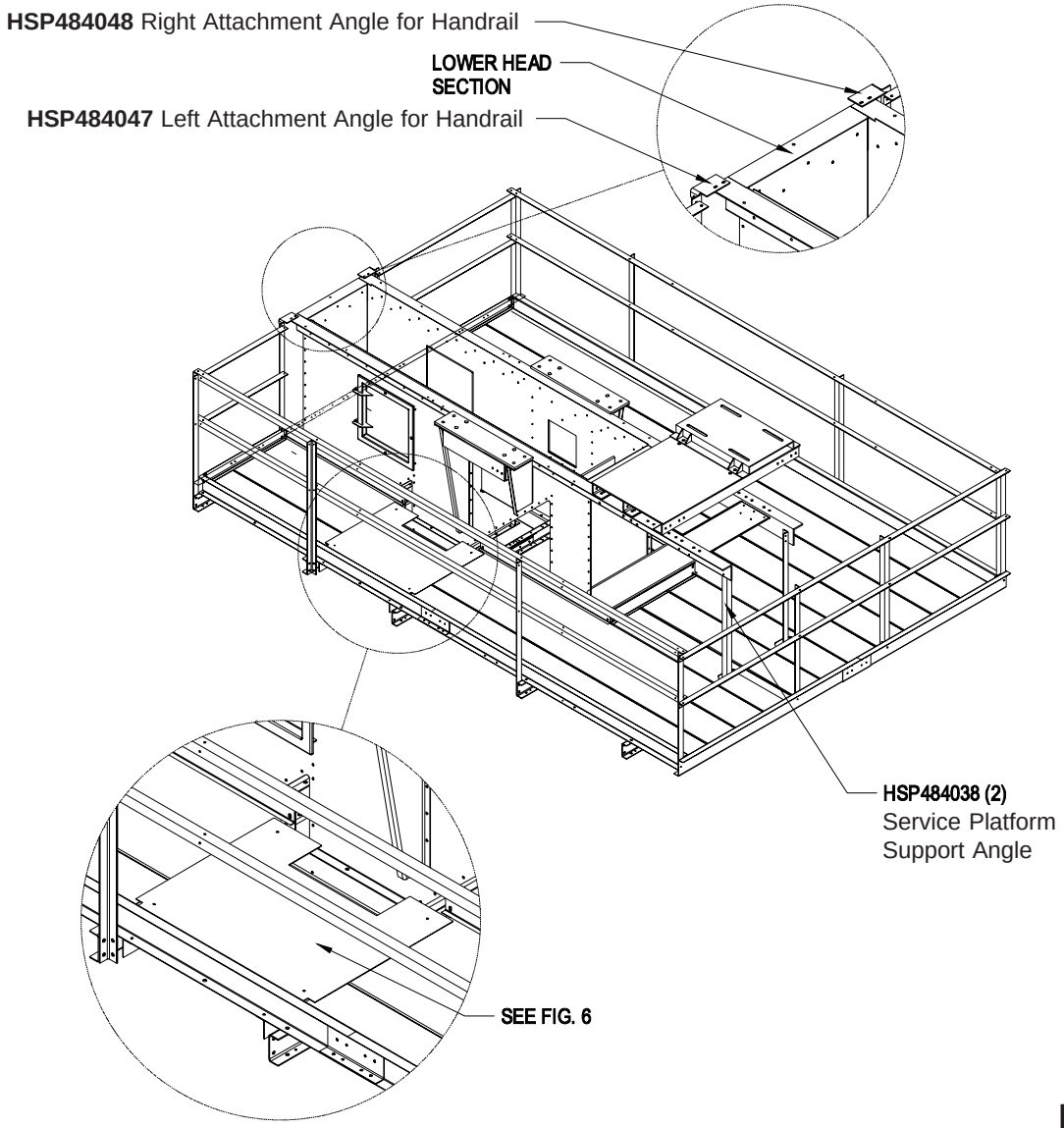

FIGURE 2-5

Hatch Access Door

Assemble the deck hatch access door by attaching the left and right hand hinges to bottom side of the outside toeboard (HSP484117) using 5/16" x 1" hex bolts. Leave hardware loose until the assembly is complete. Attach hatch assembly (HSP484055) to the hinges and double nut the hinge bolts. Do not over tighten.

Two Rung Ladder

Attach the ladder standoff angles as shown below using 1/2" x 1" hex bolts. Then attach two rung ladder to the standoff angles using 1/2" x 1" hex bolts. The top rung of the ladder should be even with the top of the decking when installed.Tighten all hardware. (See Figure 2-6)

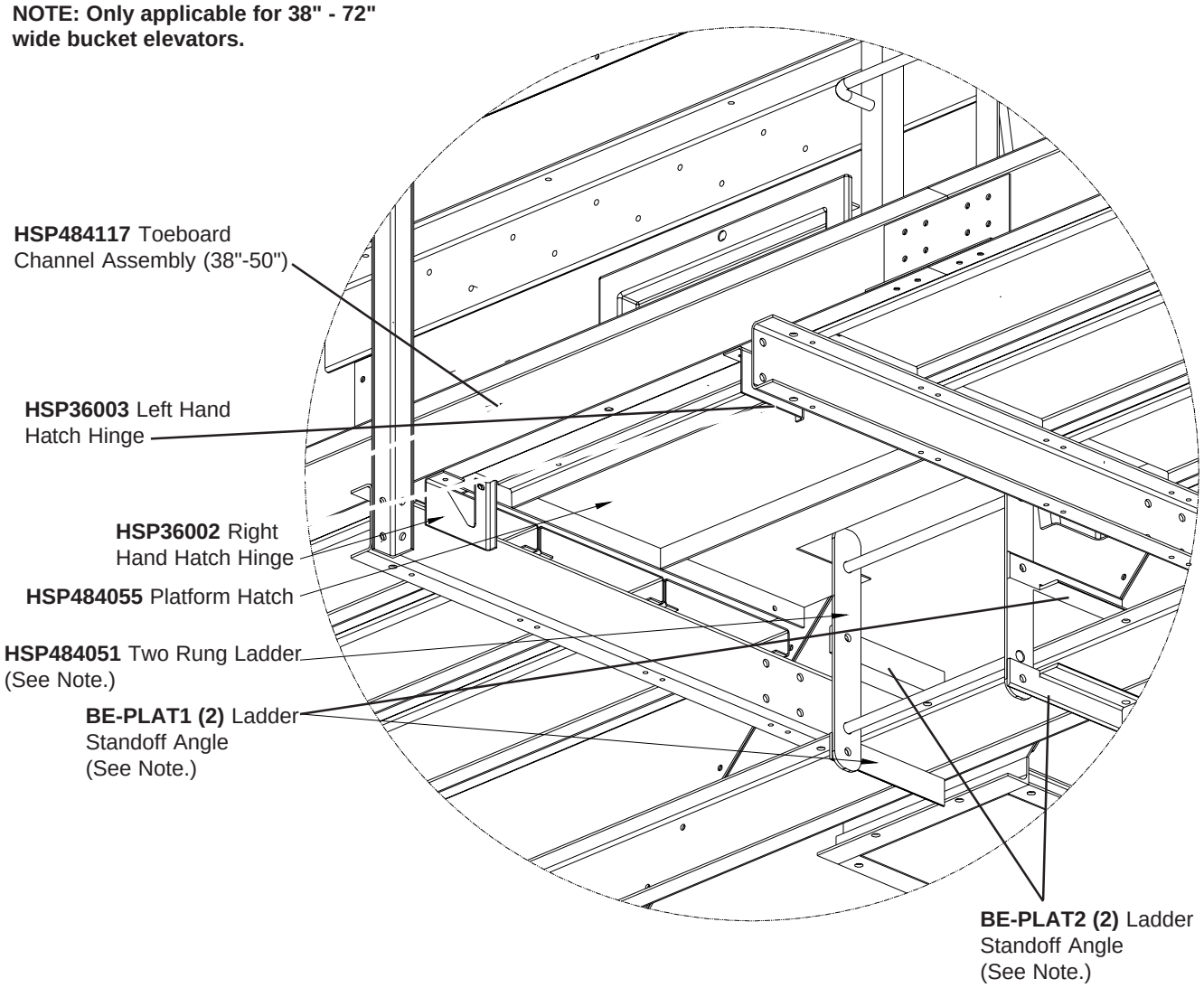

FIGURE 2-6

Grab Bar Installation

Attach the grab bar attachment angles (HSP484035) to the grab bar mounting angle using 3/8" x 1" hex bolts. Then fasten the grab bar weldment to the attachment angles and the head bearing angle using 3/8" x 1" hex bolts. Recheck assembly to be sure all hardware is secure.

NOTE: Only applicable for 38" - 72" wide bucket elevators.

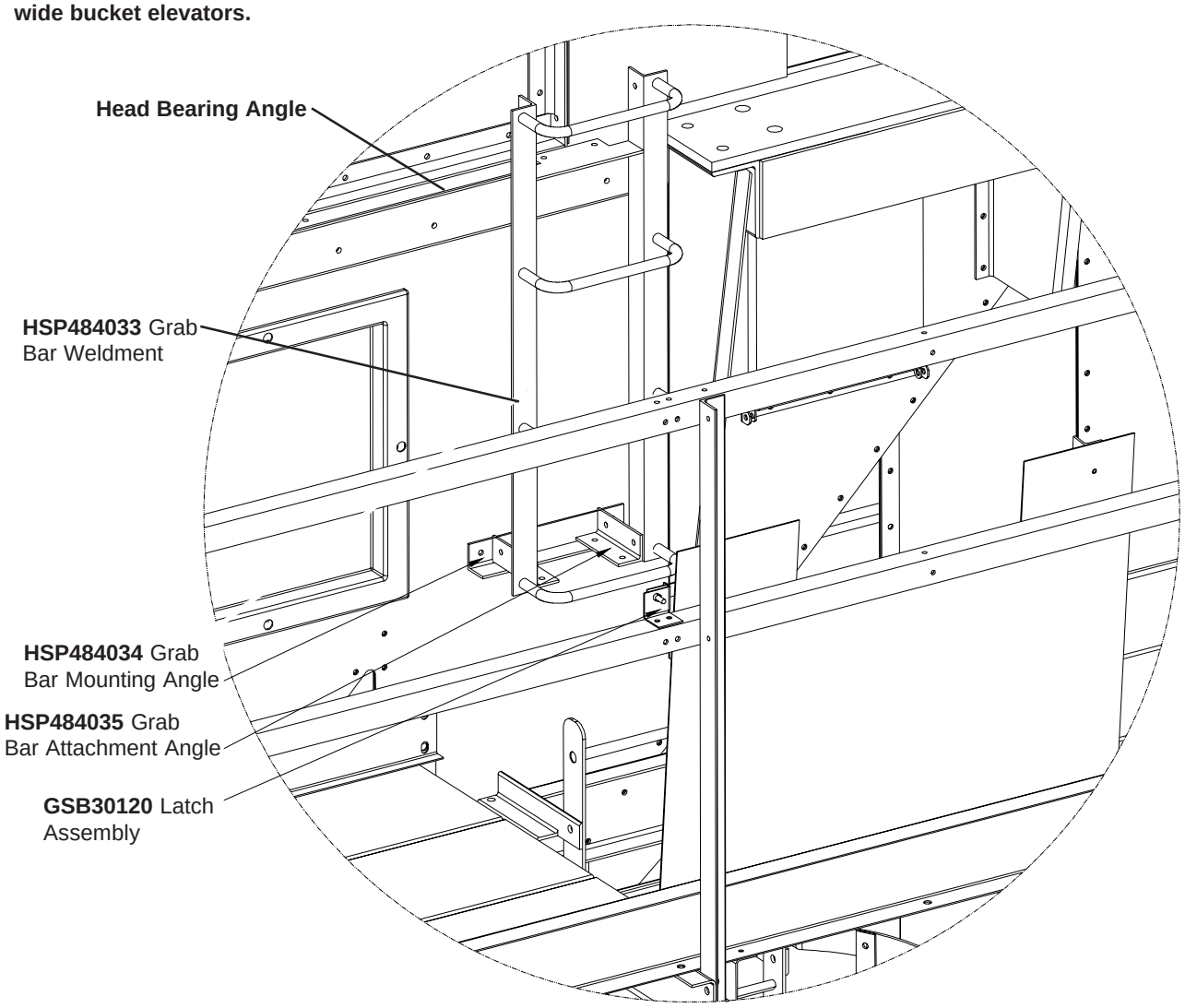

FIGURE 2-7

SECTION 3

DISTRIBUTOR PLATFORM

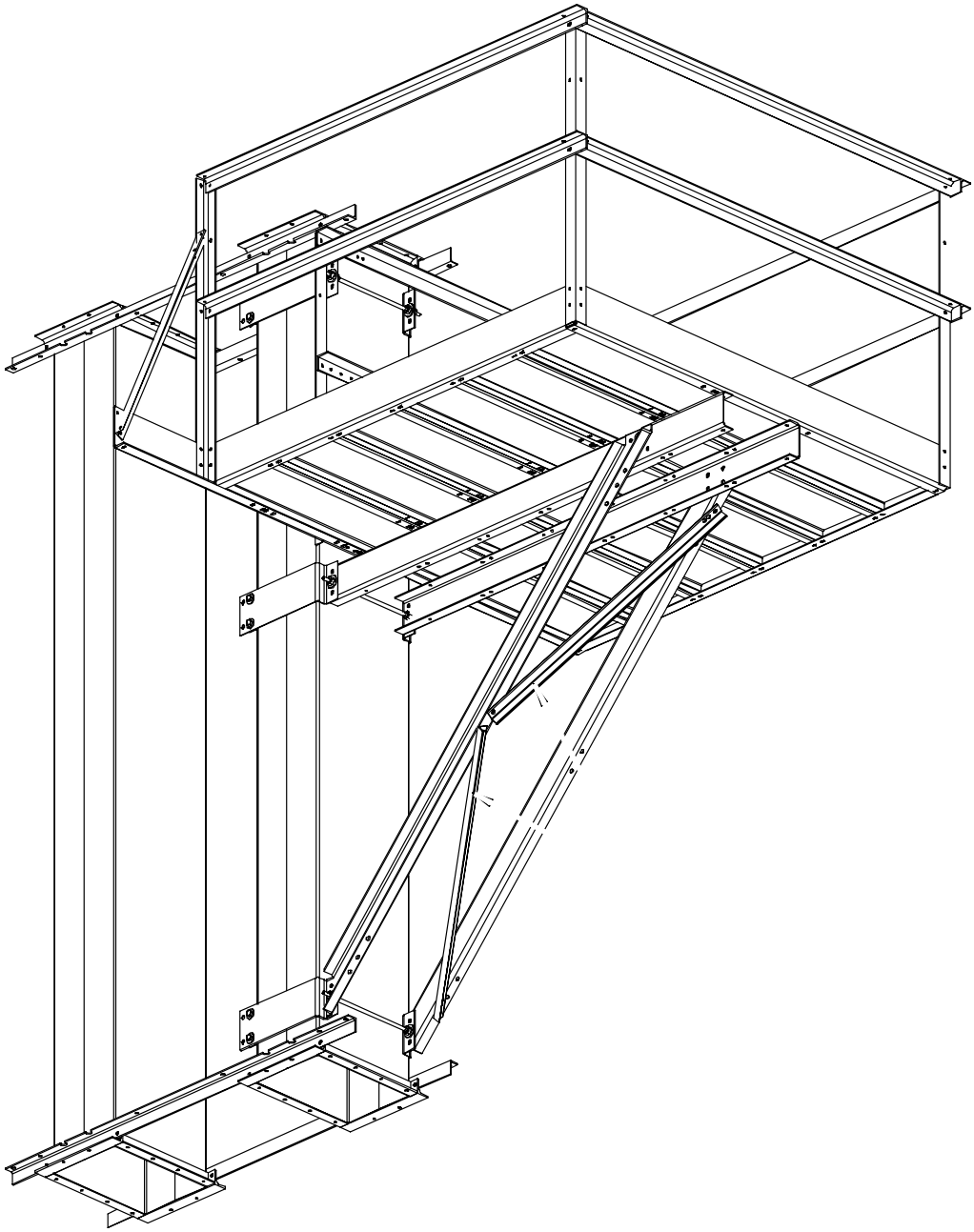

Clamp Brackets

This assembly is designed to be located at any elevation on trunking that's needed to provide access to other equipment. Determine elevation of platform surface and work from there. Locate all parts required for assembly by using the charts shown in the following figures.

Locate all clamp halves, clamp brackets, threaded rods, and hardware to assemble clamps onto the trunking. Measure the distance between the clamps to assure proper location for support channels and knee brace attachment. See clamp detail in FIgure 3-1 for hardware orientation. Place 5/8" nuts and lock washers on a threaded rod (one from each end). Place a clamp half on each end of the rod and thread another nut and lock washer to hold clamp in place. Now place that assembly around trunk and place a clamp bracket onto the opposite end of the clamp assembly and use ½" hardware to fasten parts together. Adjust the position of the inside nuts of the rod assembly to allow the clamps to be tightened onto the trunking.

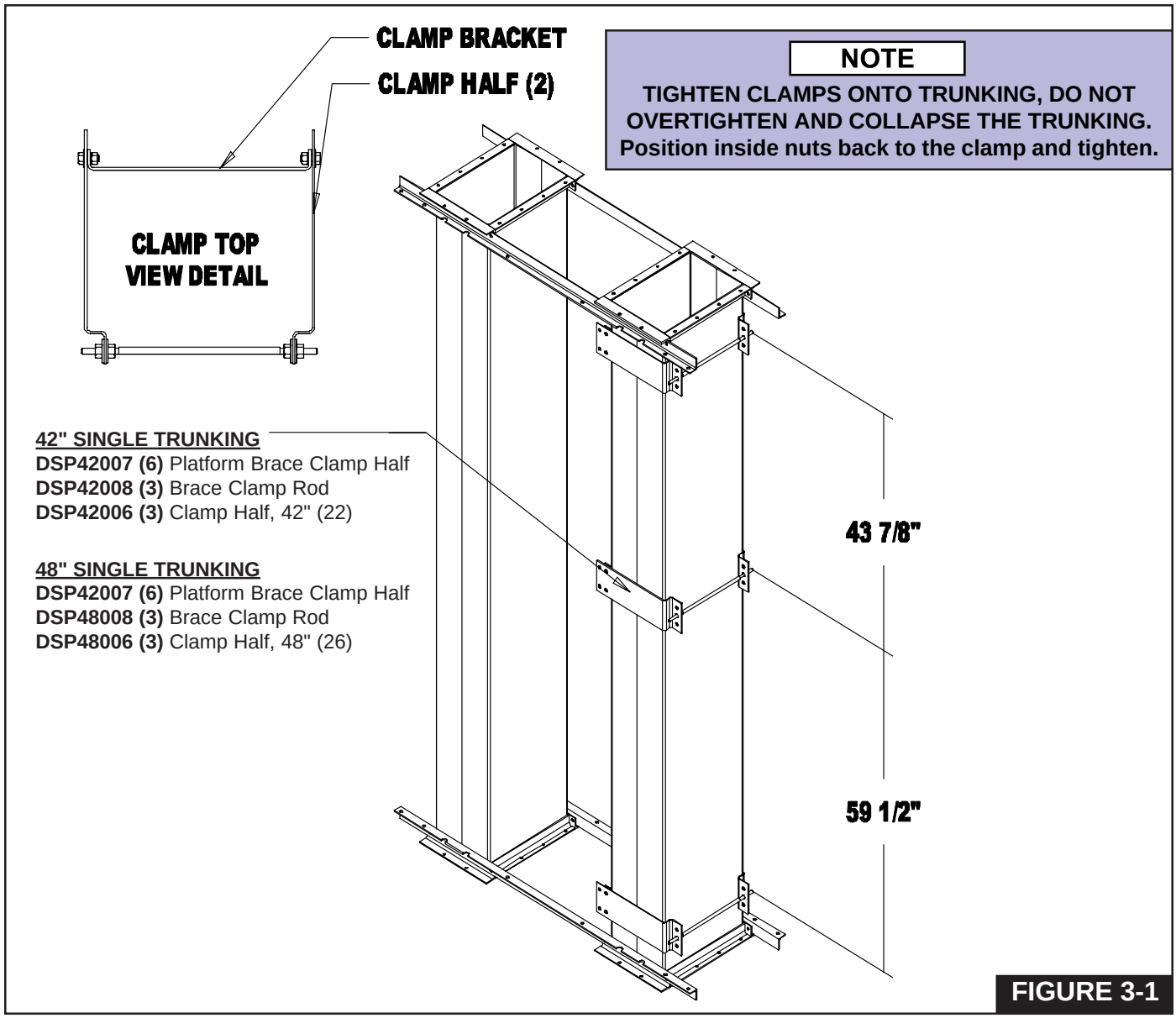

FIGURE 3-1

Distributor Platform Support and Brace Channels

With clamps fastened securely to the trunk, attach the platform support channels to the middle clamp, use ½" hardware with this assembly. The platform brace channels will attach in the upper set of holes on side of support channel and to the lower clamp. Before tightening hardware, the support channels must be perpendicular to the trunk, now tighten all hardware. (See Figure 3-2)

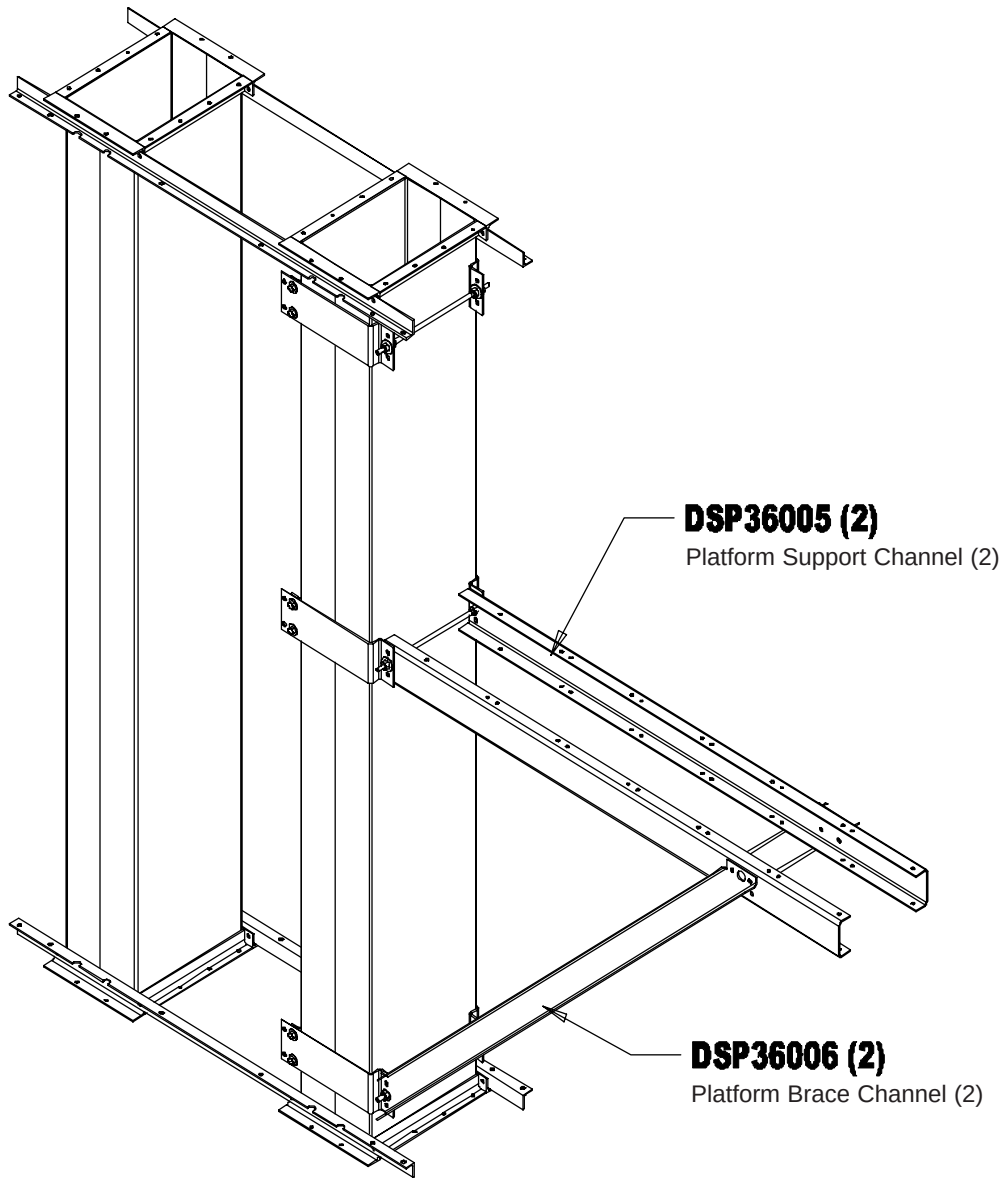

FIGURE 3-2

Distributor Platform Toeboards

The toeboards will not be centered on trunking but should be offset to the ladder side. Platform is designed to work for either side of trunking access.

With support assembly attached to trunk and hardware tightened, proceed by attaching the notched toe board and unnotched toeboard to the top of the support channel using the 5/16" hardware provided. (Leave hardware loose). See Figure 3-3.

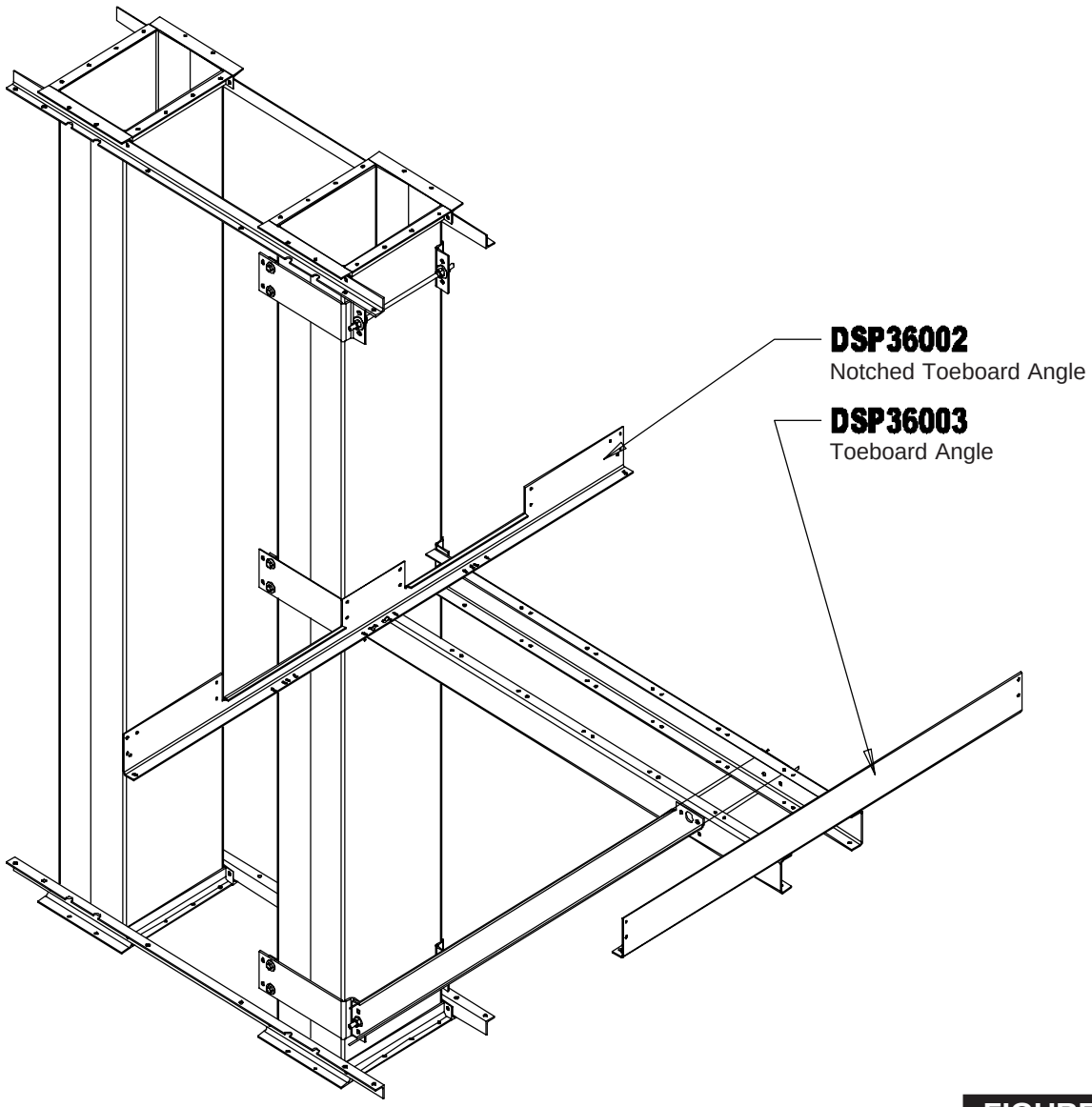

FIGURE 3-3

Distributor Decking and Toeboards

Attach the floor deck panels to the support channels using 5/16" x 1" hex bolts. Then attach decking to end toe boards with the 5/16" x 1" hex bolts provided. After all pieces have been attached, tighten all hardware. (See Figure 3-4)

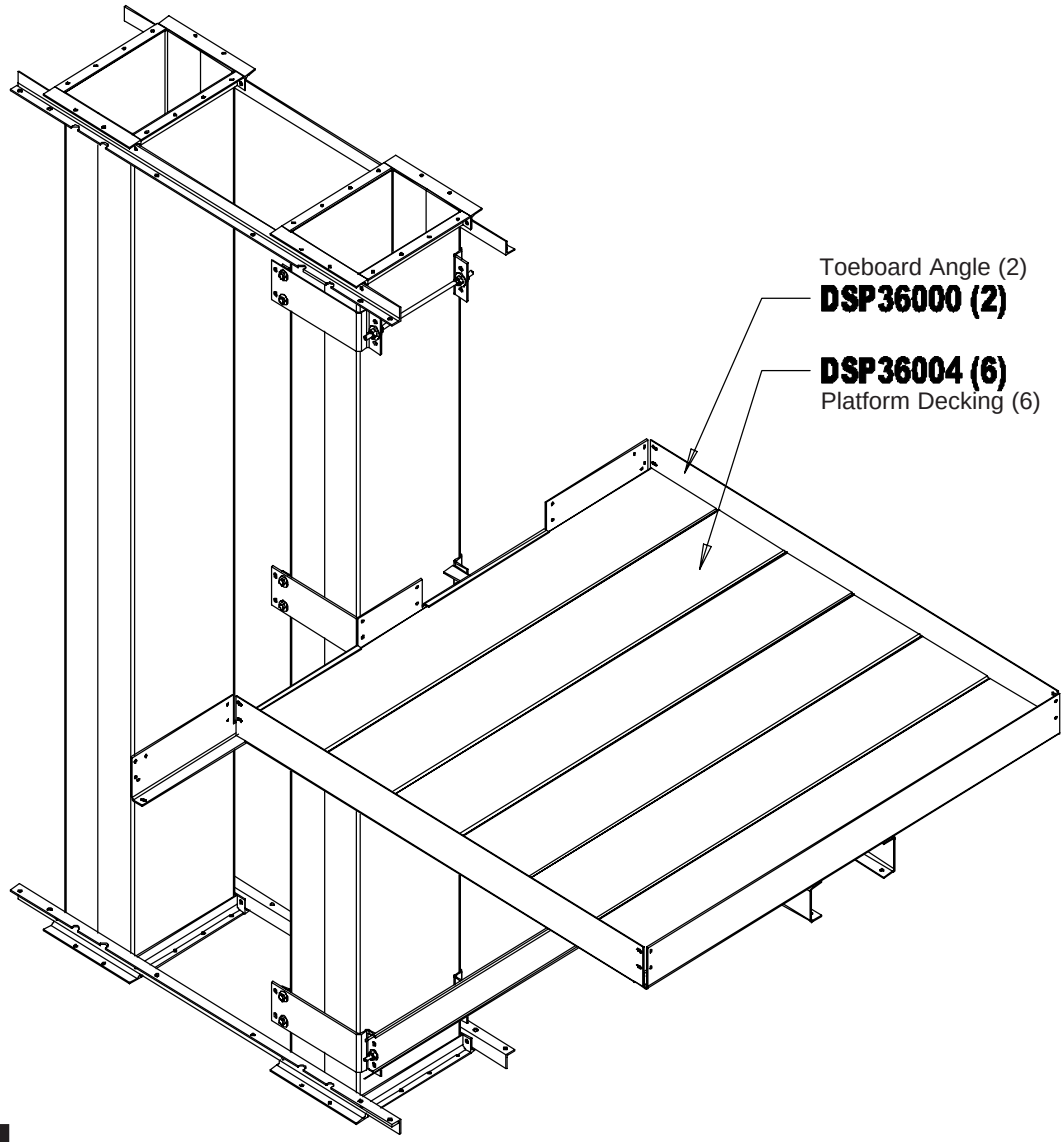

FIGURE 3-4

Handrail Posts and Handrail Angles

Locate the toe board cover plate and bolt over the unused notched toe board area 5/16" x 1" hex bolts. Attach handrail posts to the toe boards as shown using the 5/16" x 1" hex bolts provided. (Leave hardware loose until all handrails are in place.) Attach all handrail angles and brace angle 5/16" x 1" hex bolts. (See Figure 3-5.) After all pieces have been attached go back and tighten all hardware.

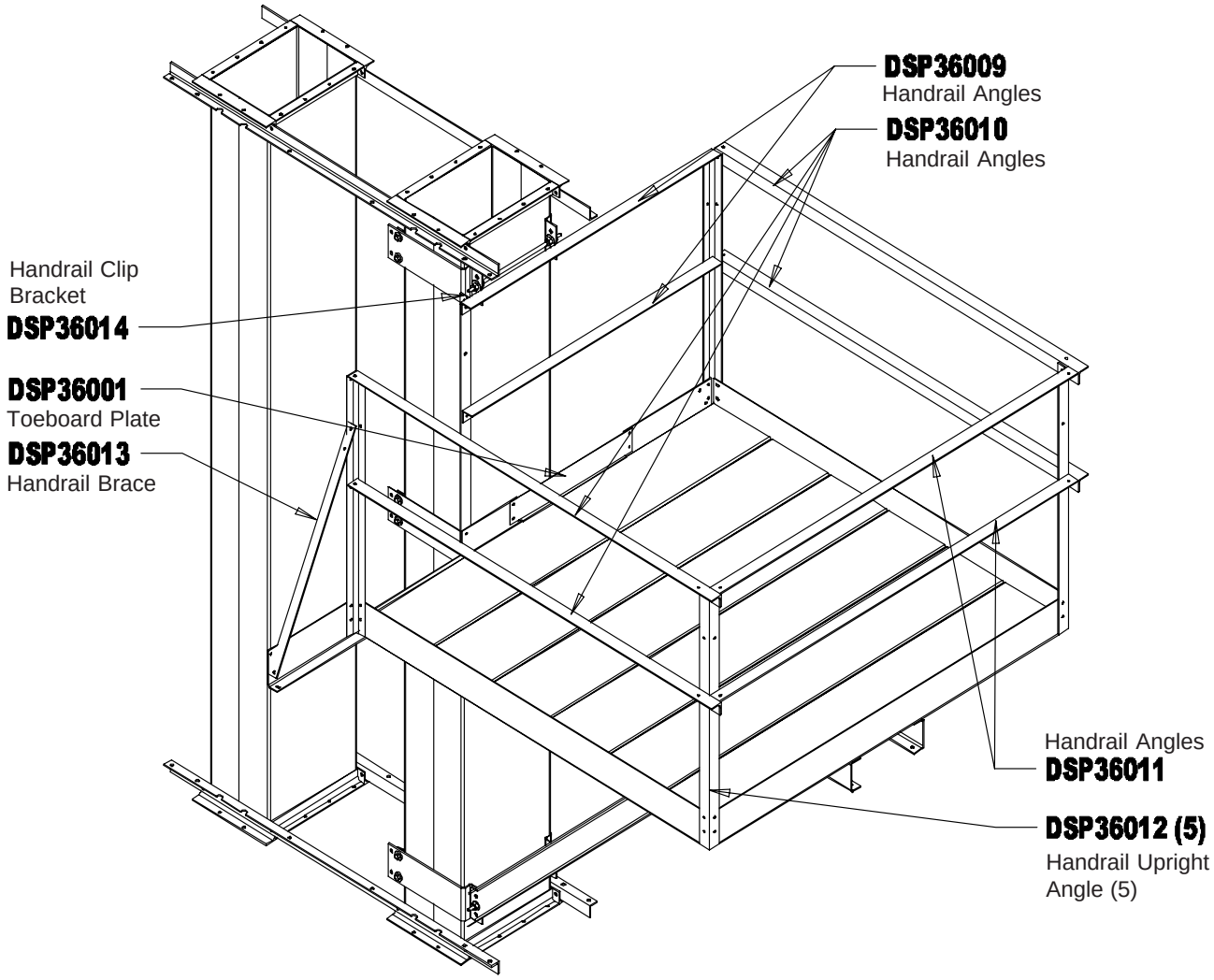

FIGURE 3-5

Cross Knee Braces

Attach cross knee brace diagonals to bottom side of the knee braces 1/2" x 1" hex bolts. This will add extra stability to the distributor platform. (See Figure 3-6.)

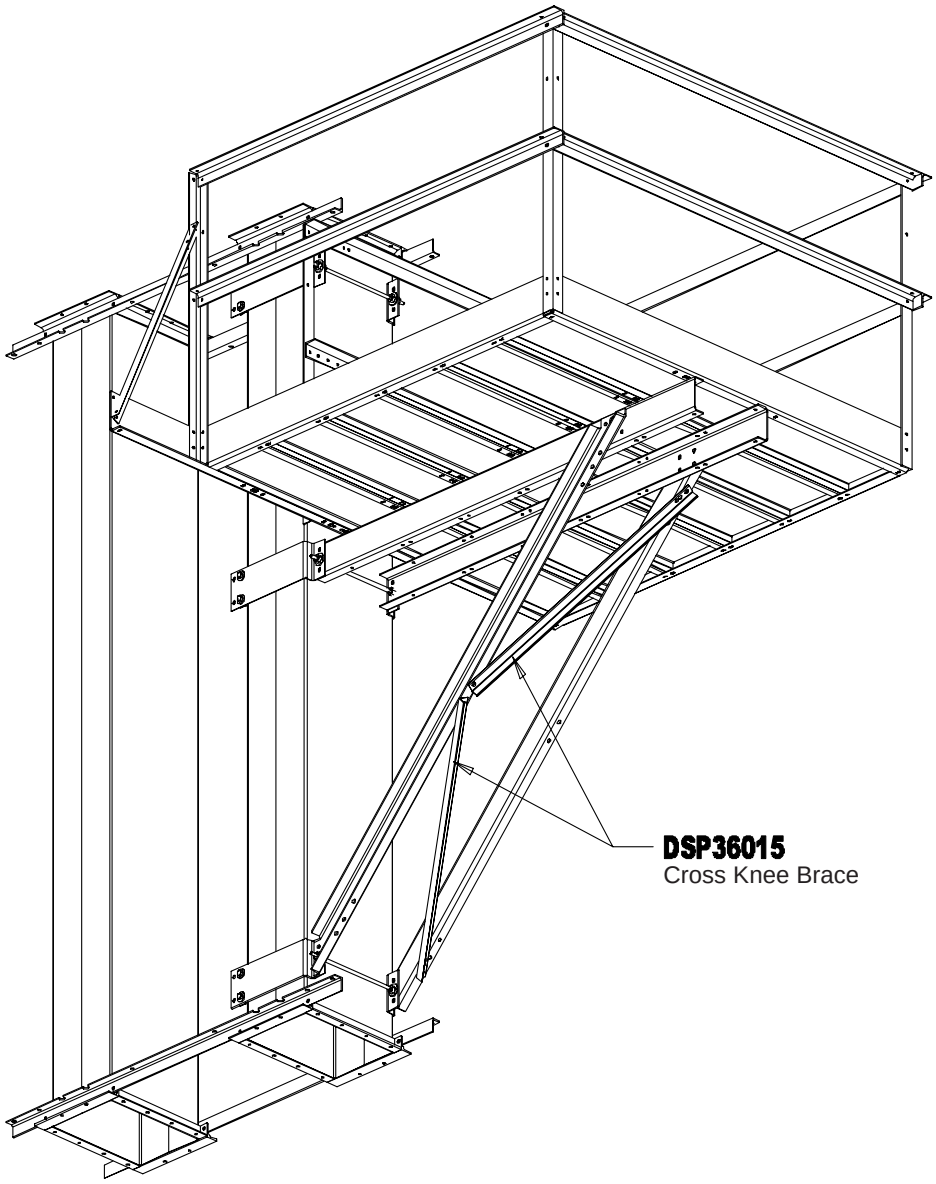

FIGURE 3-6

SECTION 4

SAFETY CAGE ASSEMBLY

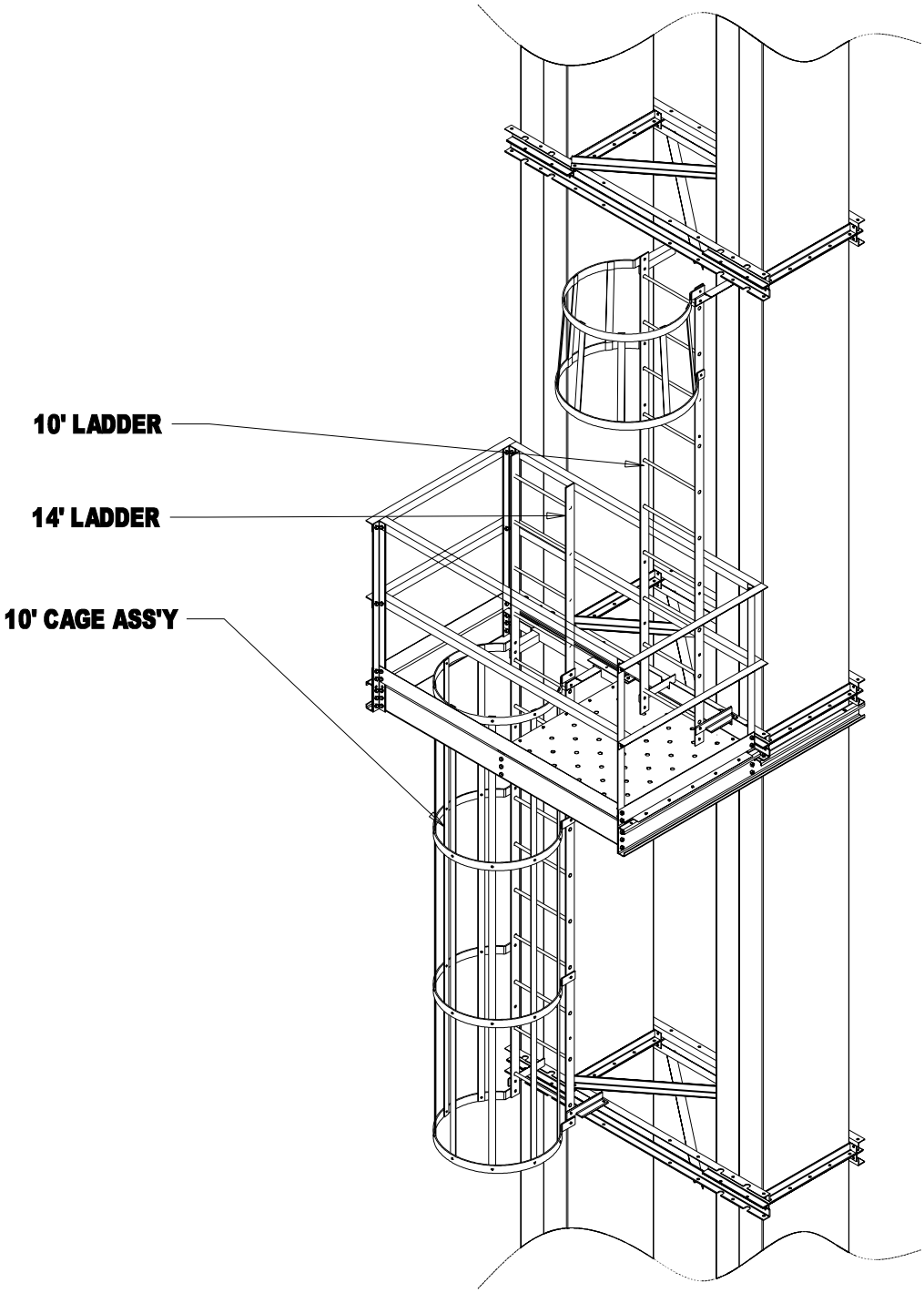

Tie Angle Attachment

Attach the up and down legs together with the tie angles. Position the tie angles around the trunking joint as shown. Fasten the tie angles to the trunking angles using 1/2"-13 x 1" bolts. (See Fig. 4-1)

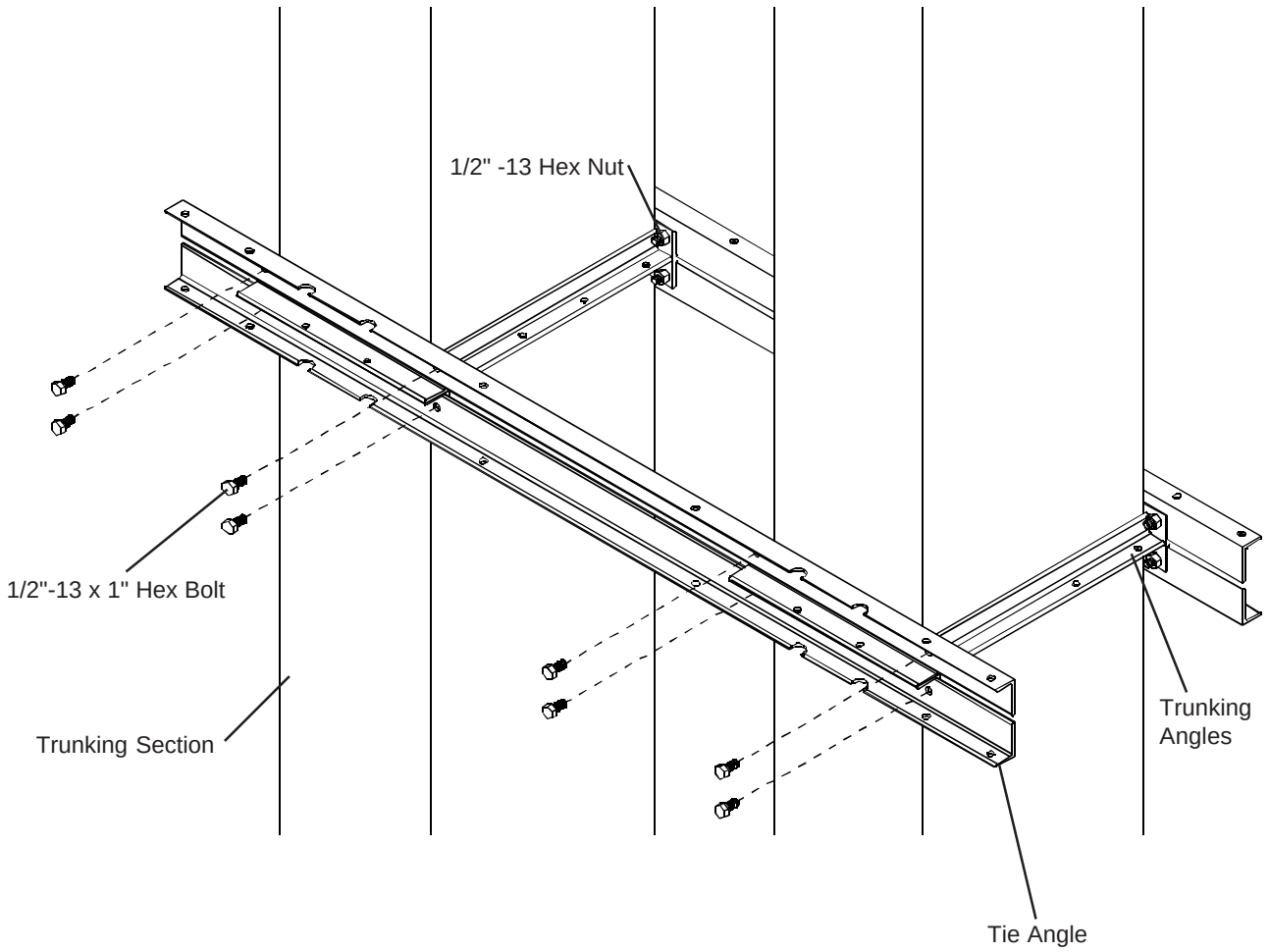

FIGURE 4-1

Tie Angle Dimensions

See Figure 4-2B for 42" & 48" tie angle dimensions. Only the 42" and 48" elevators have tie angle cross braces that brace the two tie angles diagonally. (One per pair of tie angles.) (See Figure 4-2A)

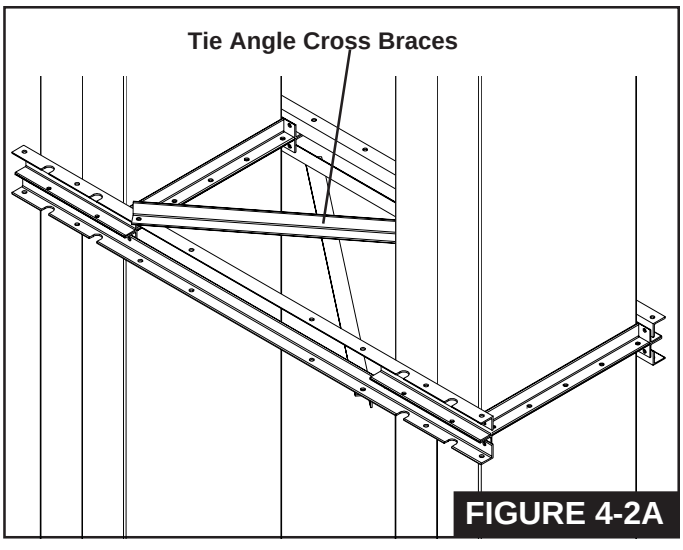

FIGURE 4-2A

BECT4204 42" Tie Angle

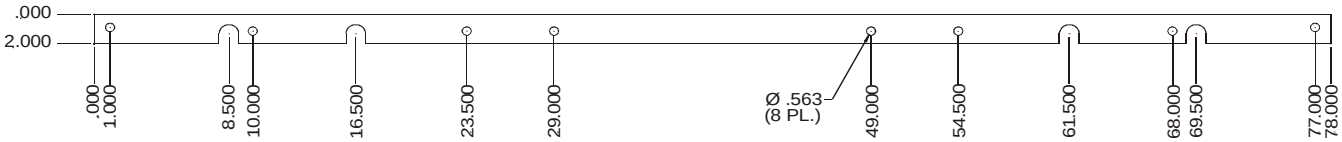

BECT4833 48" Tie Angle

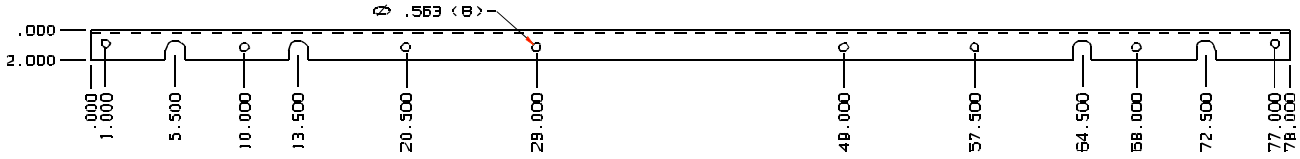

FIGURE 4-2B

Ladder Standoff Attachment

Attach the ladder standoff brackets to the tie angles using 1/2" x 1" hex bolts as shown in Figure 4-3.

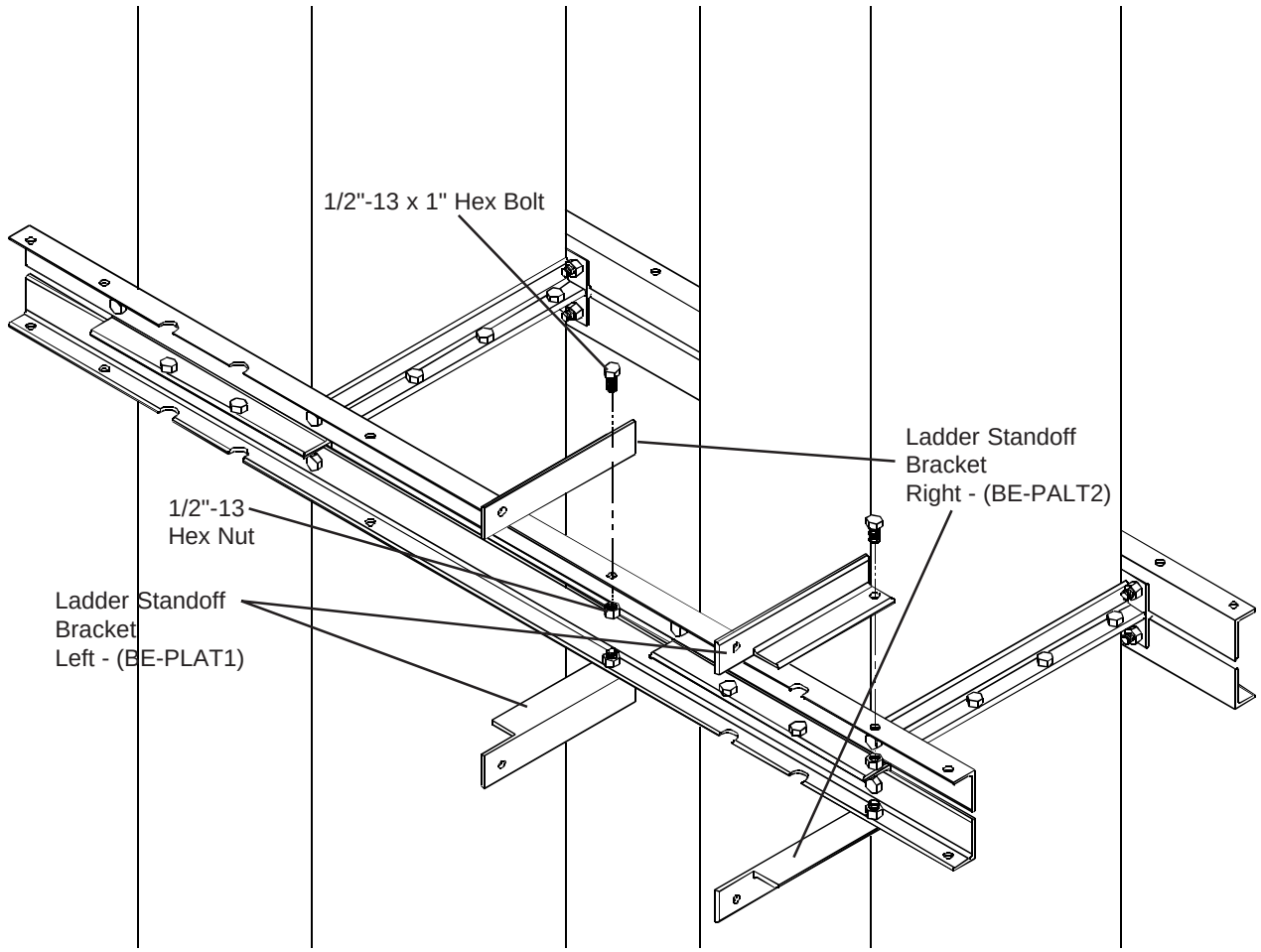

FIGURE 4-3

Ladder Attachment

Attach the ladder to the standoffs using 1/2"-13 x 1" hex bolts. When attaching the ladder to the standoffs, the ladder is attached through the second hole down the front end of the ladder. The first hole is for the safety cage hoop. Attach the safety hoop to the ladder using 1/2" x 1"hex bolts. (See Figure 4-4)

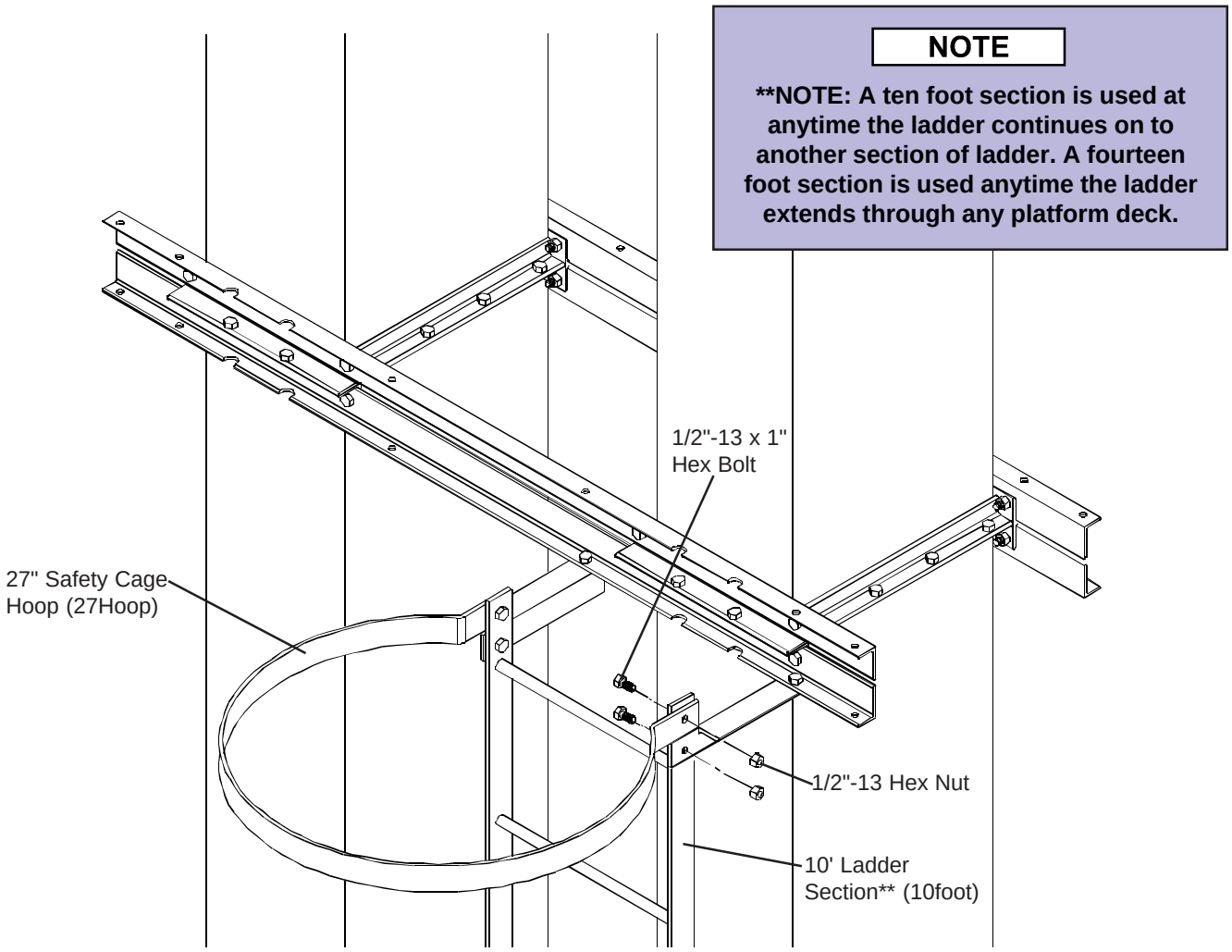

FIGURE 4-4

Safety Cage Hoop Assembly

Bolt all safety cage hoops to ladder as shown below using 1/2" x 1" hex bolts. Leave all bolts loose until the vertical bars are in place and then tighten all hardare. (See Figure 4-5)

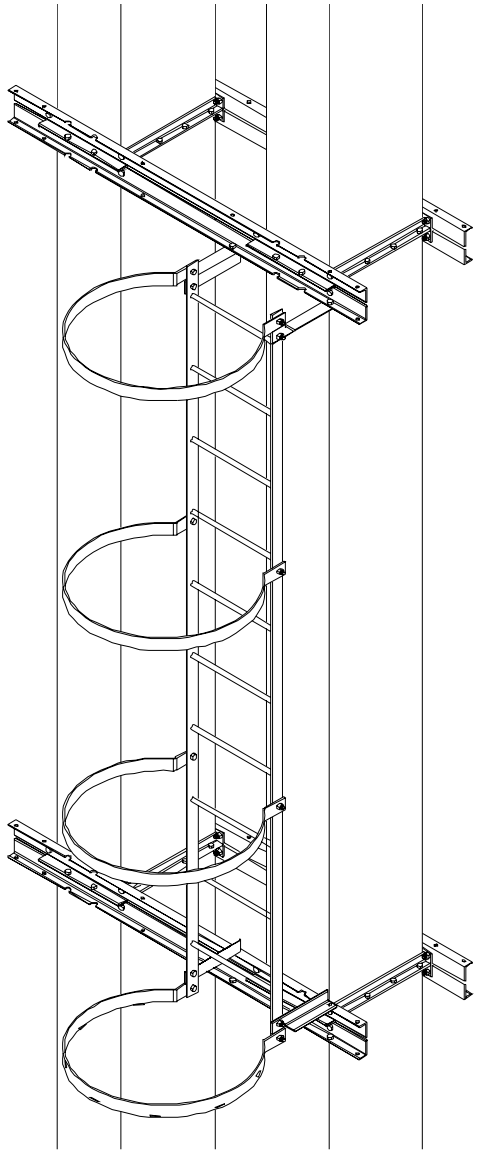

FIGURE 4-5

Safety Cage Vertical Bar Attachment

Bolt all safety cage vertical bars to the cage hoops shown below. The vertical bars should be installed to the inside of the hoops using 1/2" x 1" hex bolts. (See Figure 4-6)

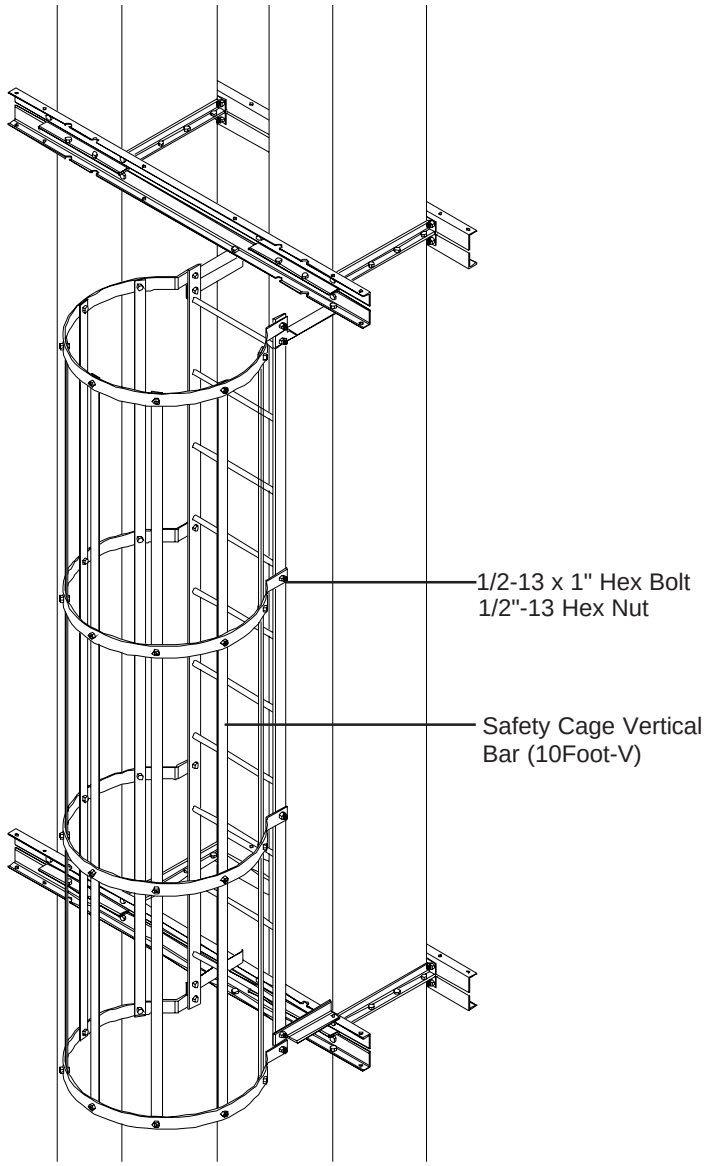

FIGURE 4-6

Safety Cage Flare Attachment

Attach the safety cage tapper vertical bars to the inside of the 27" & 30 " safety hoops using 1/2" x 1" hex bolts. (See Figure 4-6) Then fasten the 27" safety cage hoop through the top hole on the ladder using 1/2" x 1" hex bolts. Install the 30" Hoop to the ladder using 1/2" x 1" hex bolts.

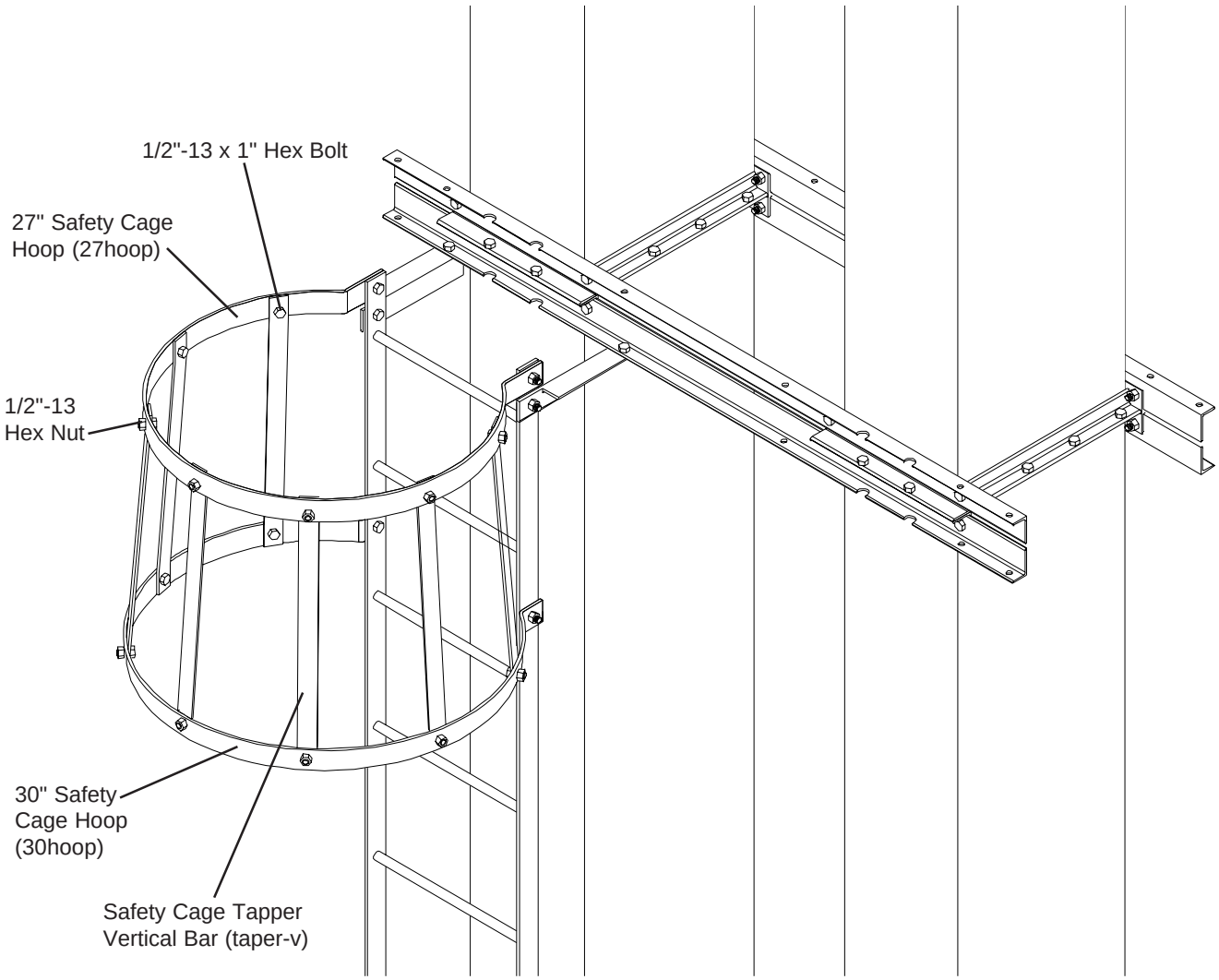

FIGURE 4-6

SECTION 5

REST PLATFORM ASSEMBLY

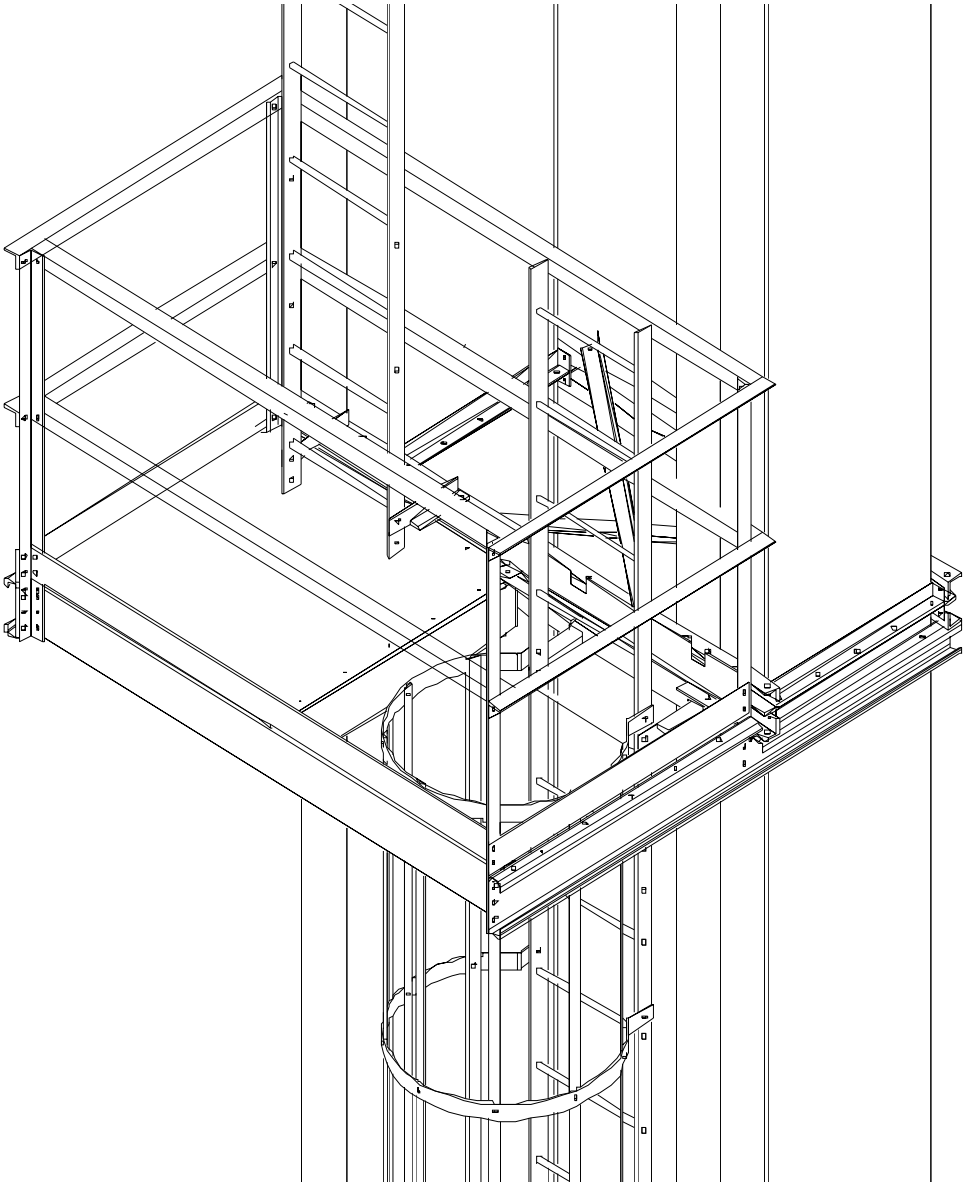

Installing Side Mounting Channels

The first step to assemble the rest platform is to attach the side mounting channels to the tie angles using 1/2" x 1" hex bolts. (See Figure 5-1)

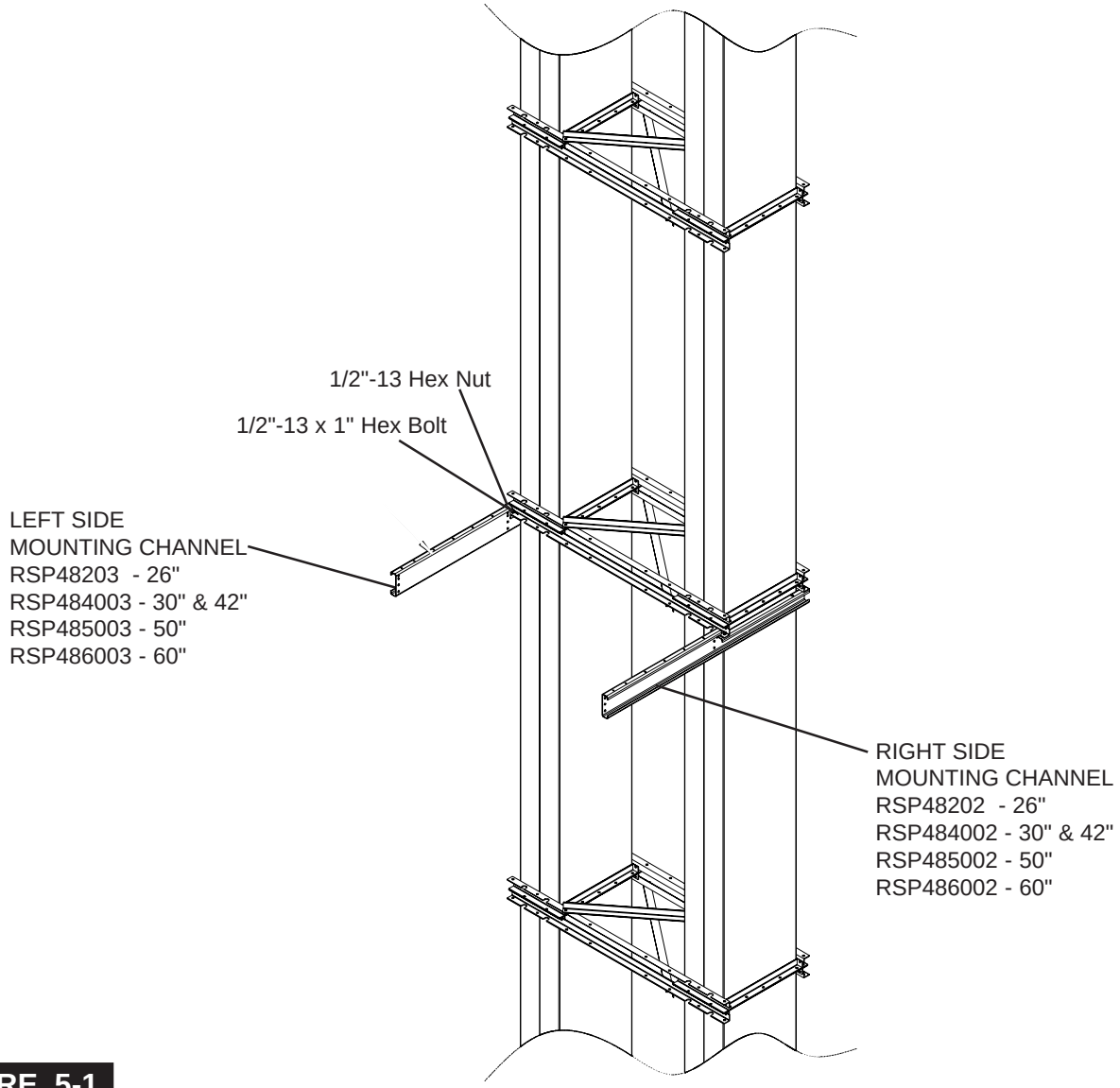

FIGURE 5-1

Platform Corner Post

Next attach the platform corner posts to the mounting channels as shown below using 1/2" x 1" hex bolts. Leaving hardware loose will help fit other parts in place. (See Figure 5-2)

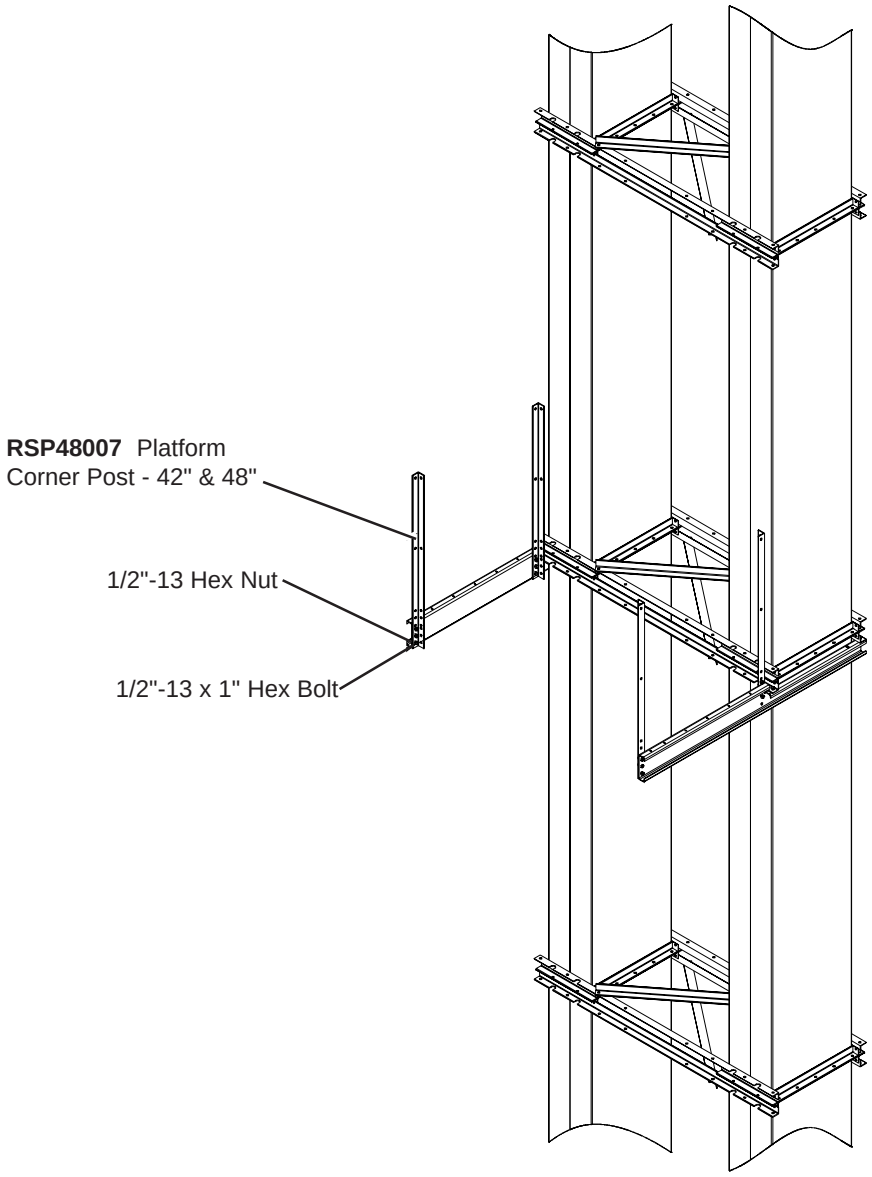

FIGURE 5-2

Front and Rear Mounting Channels

The next step is to attach the front and rear support channel to the platform corner posts as shown below using 1/2" x 1" hex bolts. (See Figure 5-3)

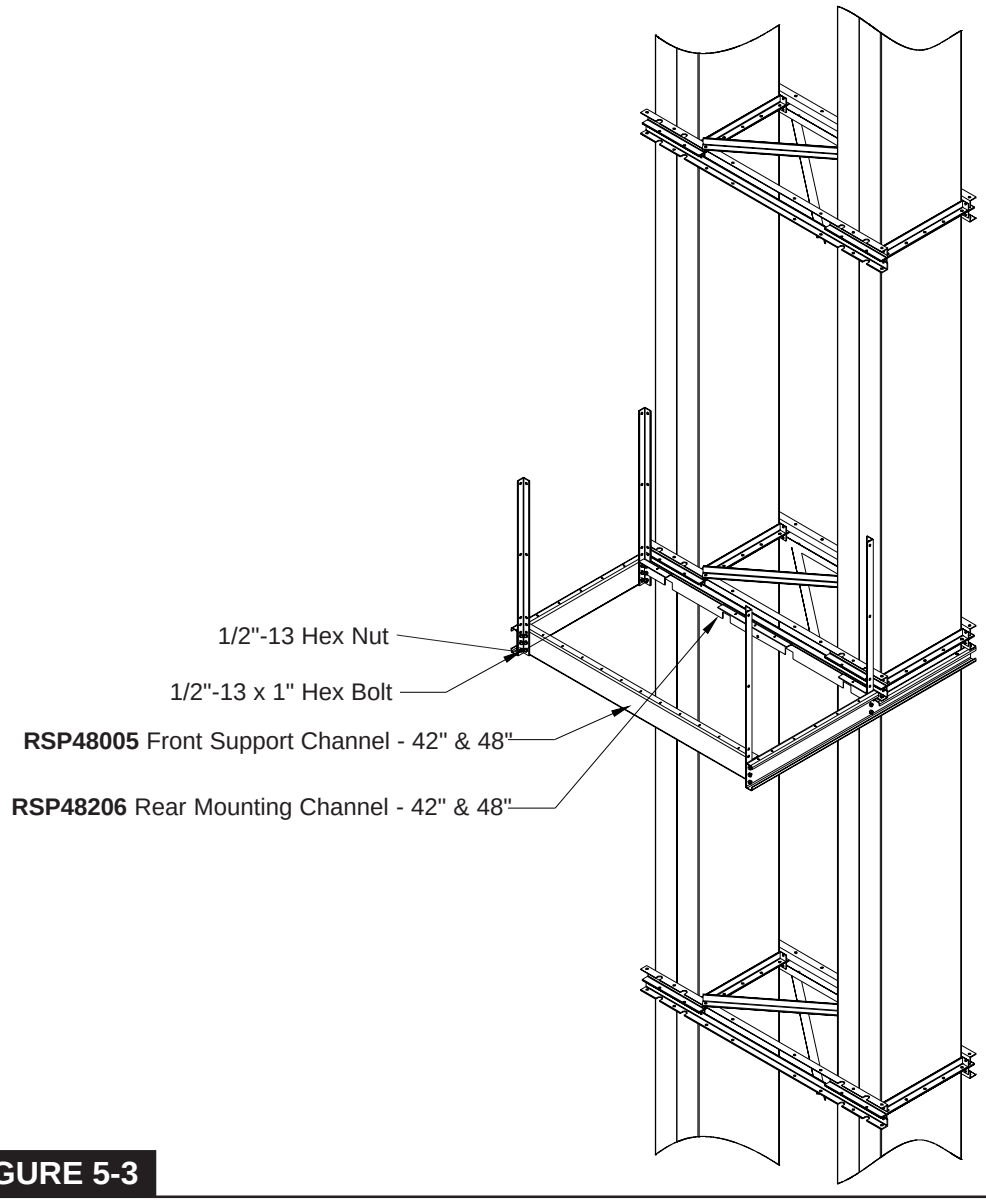

FIGURE 5-3

Center Support Channel

To complete the support frame, bolt on the center support channel to the front and rear support channel using 1/2" x 1" hex bolts. (See Figure 5-4)

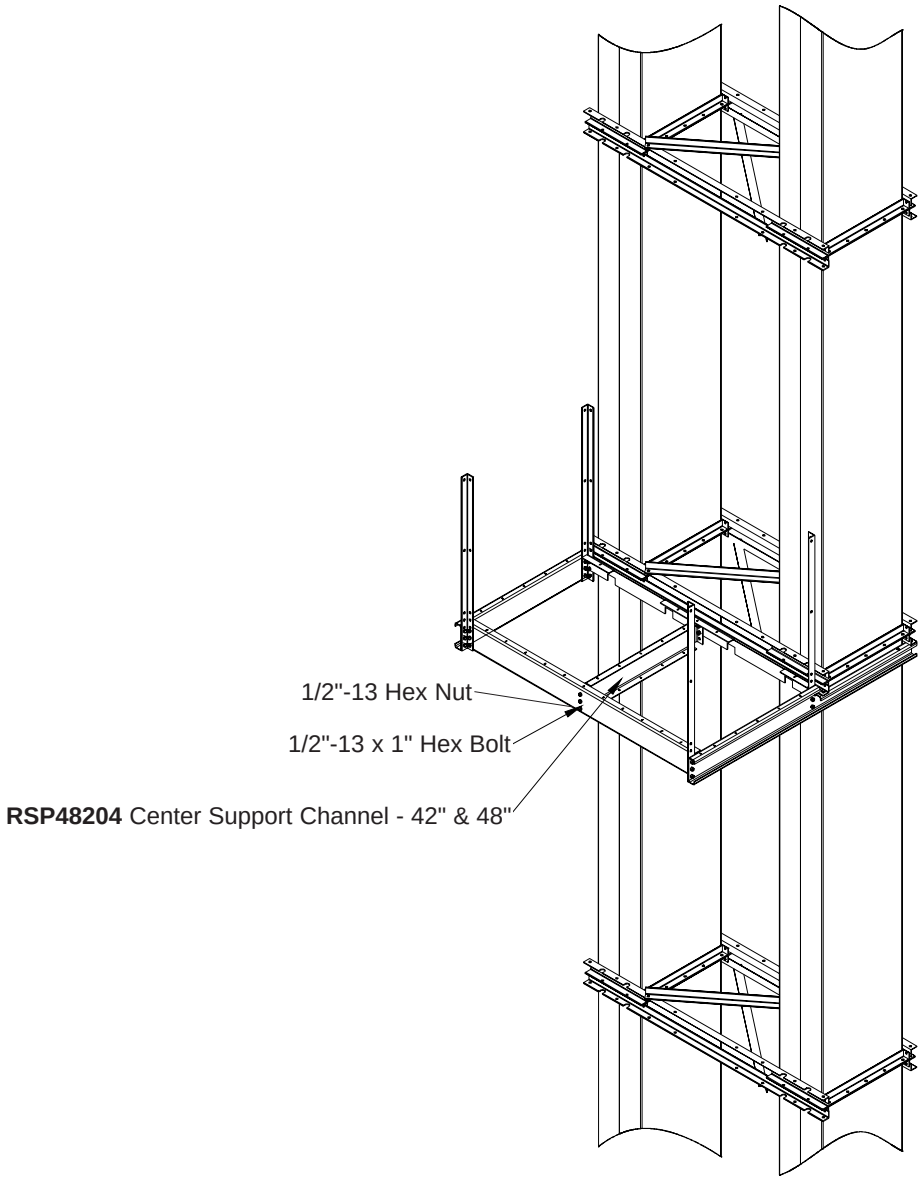

FIGURE 5-4

Rest Platform Deck Plate

Using the 1/4" hardware, bolt the deck tread plate to the mounting and support frames. (See Figure 5-5)

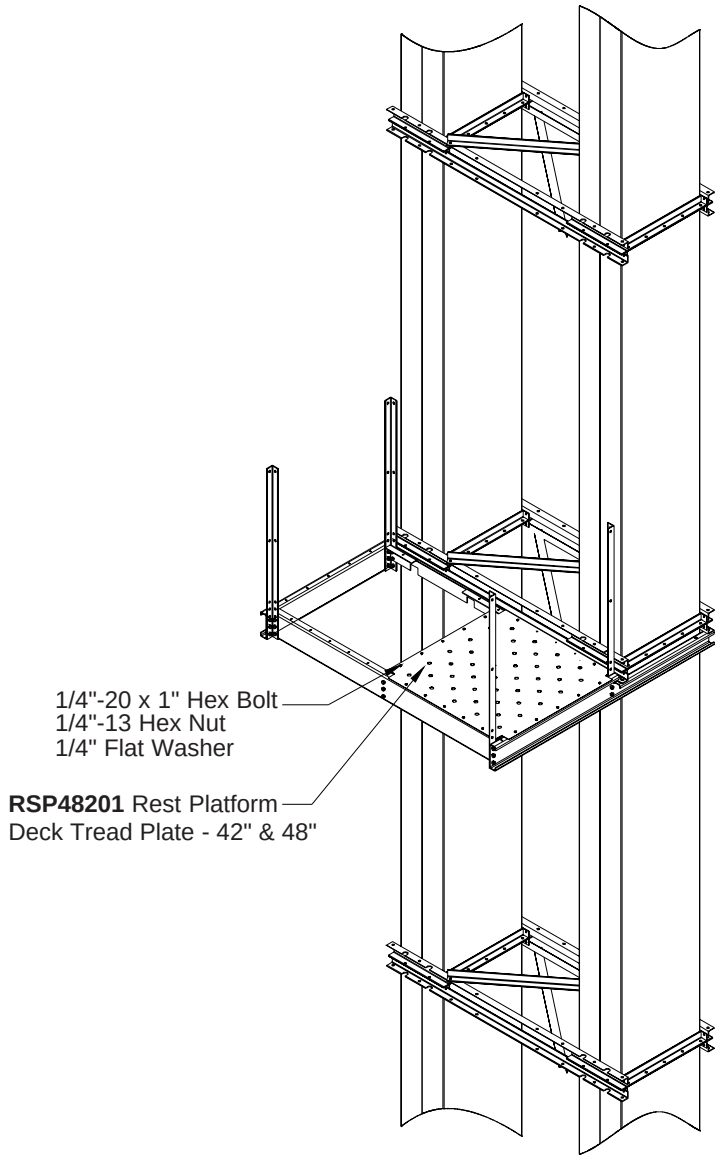

FIGURE 5-5

Top and Mid Handrails

Bolt on all the top and mid handrails following picture below using 1/2" x 1" hex bolts. (See Figure 5-6)

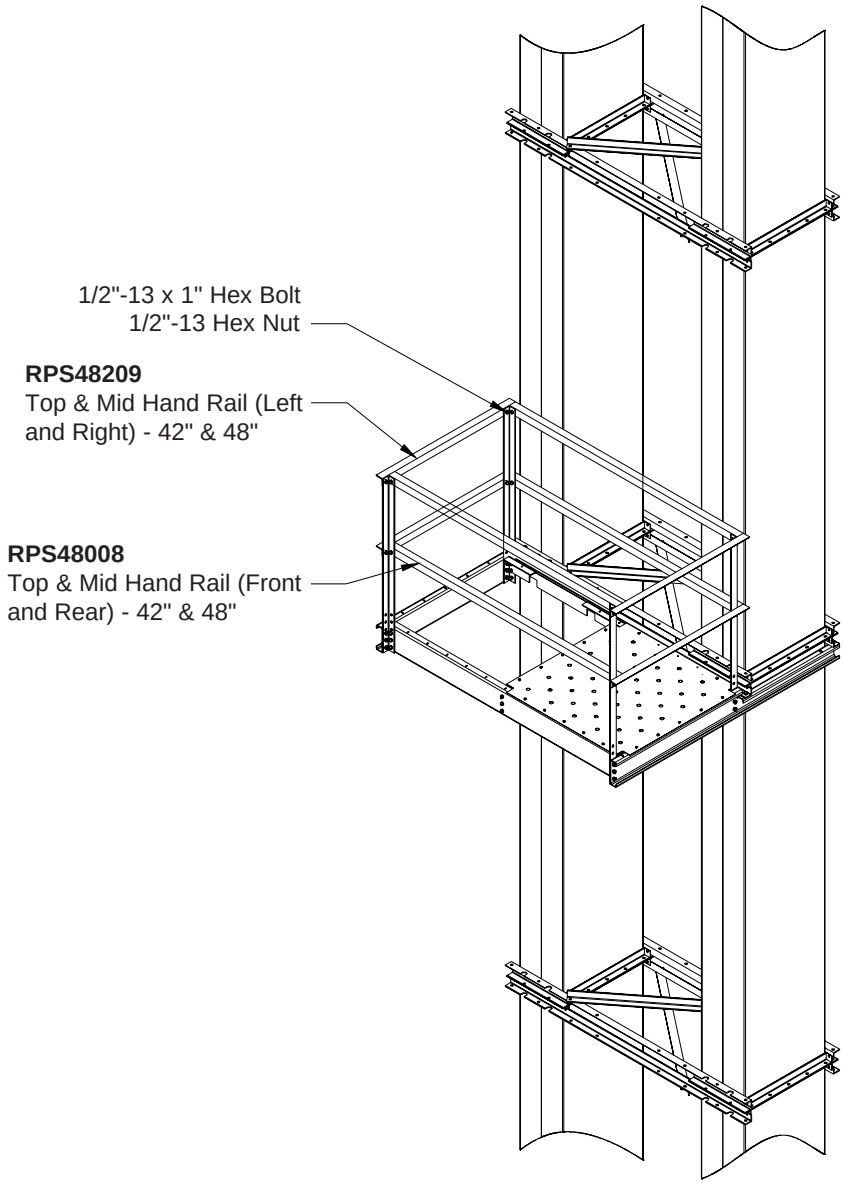

FIGURE 5-6

Kickplates

To complete the rest platform, bolt on all toeboards to the platform corner posts as shown using the hardware in figure 5-7. Recheck all hardware in assembly to ensure proper tightness.

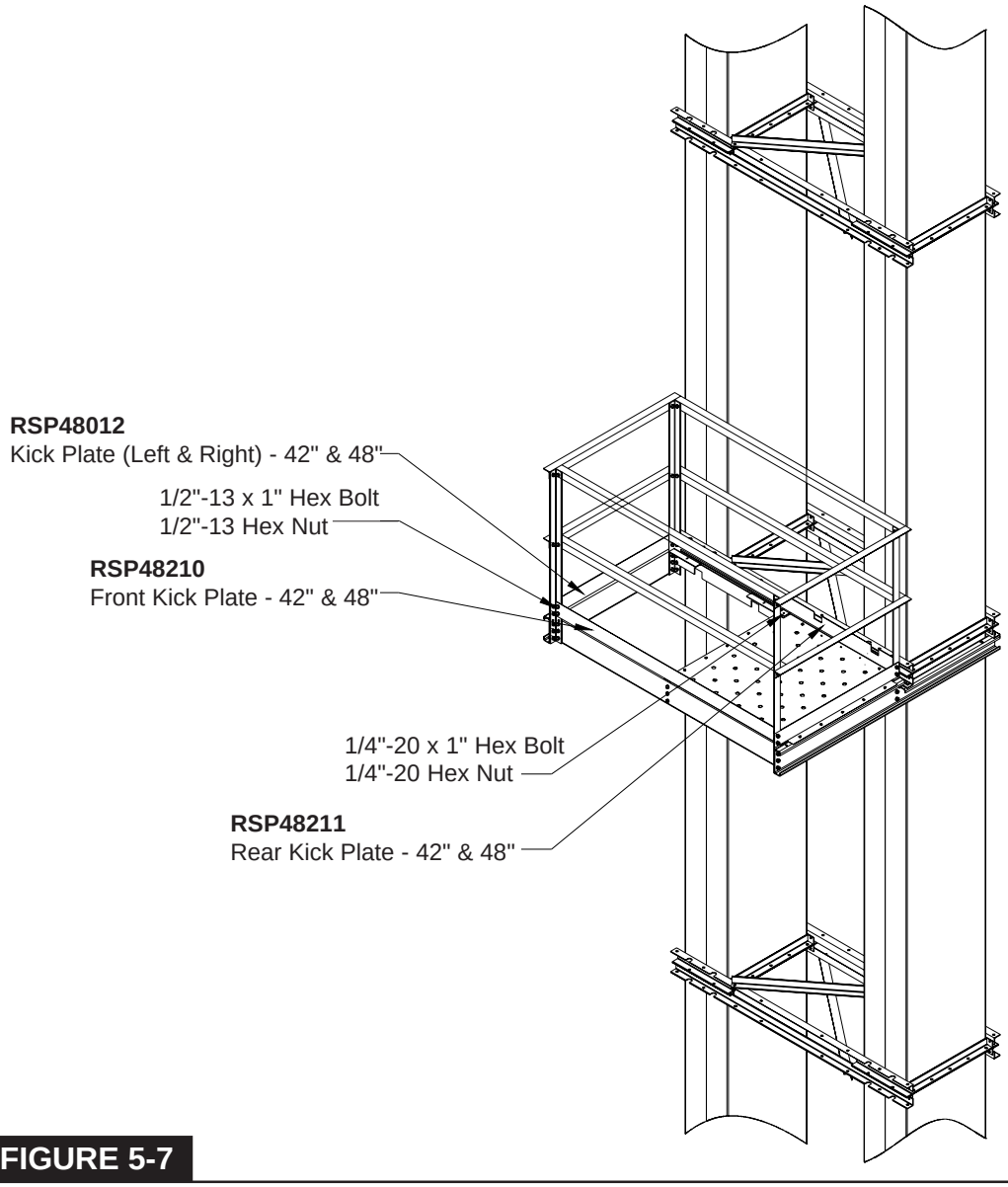

FIGURE 5-7

The GSI Group, Inc. Warranty

THE GSI GROUP, INC. ("GSI") WARRANTS ALL PRODUCTS WHICH IT MANUFACTURES TO BE FREE OF DEFECTS IN MATERIAL AND WORKMANSHIP UNDER NORMAL USAGE AND CONDITIONS FOR A PERIOD OF 12 MONTHS AFTER RETAIL SALE TO THE ORIGINAL END USER. THE PURCHASER'S SOLE REMEDY AND GSI'S ONLY OBLIGATION SHALL BE TO REPAIR OR REPLACE, AT GSI'S OPTION AND EXPENSE, PRODUCTS THAT, IN GSI'S SOLE JUDGMENT, CONTAIN A MATERIAL DEFECT DUE TO MATERIALS OR WORKMANSHIP. ALL DELIVERY AND SHIPMENT CHARGES TO AND FROM GSI'S FACTORY WILL BE PURCHASER'S RESPONSIBILITY. EXPENSES INCURRED BY OR ON BEHALF OF THE PURCHASER WITHOUT PRIOR WRITTEN AUTHORIZATION FROM AN AUTHORIZED EMPLOYEE OF GSI SHALL BE THE SOLE RESPONSIBILITY OF THE PURCHASER.

EXCEPT FOR THE LIMITED WARRANTY EXPRESSED ABOVE, GSI MAKES NO FURTHER WARRANTY OF ANY KIND, EXPRESS OR IMPLIED, INCLUDING, WITHOUT LIMITATION, WARRANTIES OF MERCHANTABILITY OR FITNESS FOR A PARTICULAR PURPOSE OR USE IN CONNECTION WITH (I) PRODUCT MANUFACTURED OR SOLD BY GSI OR (ii) ANY ADVICE, INSTRUCTION, RECOMMENDATION OR SUGGESTION PROVIDED BY AN AGENT, REPRESENTATIVE OR EMPLOYEE OF GSI REGARDING OR RELATED TO THE CONFIGURATION, INSTALLATION, LAYOUT, SUITABILITY FOR A PARTICULAR PURPOSE, OR DESIGN OF SUCH PRODUCTS.

GSI SHALL NOT BE LIABLE FOR ANY DIRECT, INDIRECT, INCIDENTAL OR CONSEQUENTIAL DAMAGES, INCLUDING, WITHOUT LIMITATION, LOSS OF ANTICIPATED PROFITS OR BENEFITS. PURCHASER'S SOLE AND EXCLUSIVE REMEDY IS AS SET FORTH IN THE LIMITED WARRANTY EXPRESSED ABOVE, WHICH SHALL NOT EXCEED THE AMOUNT PAID FOR THE PRODUCT PURCHASED. THIS WARRANTY IS NOT TRANSFERABLE AND APPLIES ONLY TO THE ORIGINAL PURCHASER. GSI SHALL HAVE NO OBLIGATION OR RESPONSIBILITY FOR ANY REPRESENTATIONS OR WARRANTIES MADE BY OR ON BEHALF OF ANY DEALER, AGENT OR DISTRIBUTOR OF GSI.

GSI ASSUMES NO RESPONSIBILITY FOR CLAIMS RESULTING FROM ERECTION DEFECTS OR UNAUTHORIZED MODIFICATIONS TO PRODUCTS WHICH IT MANUFACTURED. MODIFICATIONS TO PRODUCTS NOT SPECIFICALLY DELINEATED IN THE MANUAL ACCOMPANYING THE EQUIPMENT AT INITIAL SALE WILL NULLIFY THE PRODUCT WARRANTY THAT MIGHT HAVE BEEN OTHERWISE AVAILABLE.

THE FOREGOING WARRANTY SHALL NOT EXTEND TO PRODUCTS OR PARTS WHICH HAVE BEEN DAMAGED BY NEGLIGENT USE, MISUSE, ALTERATION OR ACCIDENT. THIS WARRANTY EXTENDS SOLELY TO ONLY PRODUCTS MANUFACTURED BY GSI. THIS WARRANTY IS EXCLUSIVE AND IN LIEU OF ALL OTHER WARRANTIES EXPRESS OR IMPLIED. GSI RESERVES THE RIGHT TO MAKE DESIGN OR SPECIFICATION CHANGES AT ANY TIME.

PRIOR TO INSTALLATION, PURCHASER HAS THE RESPONSIBILITY TO COMPLY WITH ALL FEDERAL, STATE AND LOCAL CODES WHICH MAY APPLY TO THE LOCATION AND INSTALLATION OF PRODUCTS MANUFACTURED OR SOLD BY GSI.

This Equipment shall be installed in accordance with the current installation codes and applicable regulations which should be carefully followed in all cases. Authorities having jurisdiction should be consulted before installation occurs.

1004 East Illinois Street
Assumption, IL 62510
217-226-4421 Phone
800-800-5329 FAX

Copyright © 2005 by The GSI Group
Printed in the USA