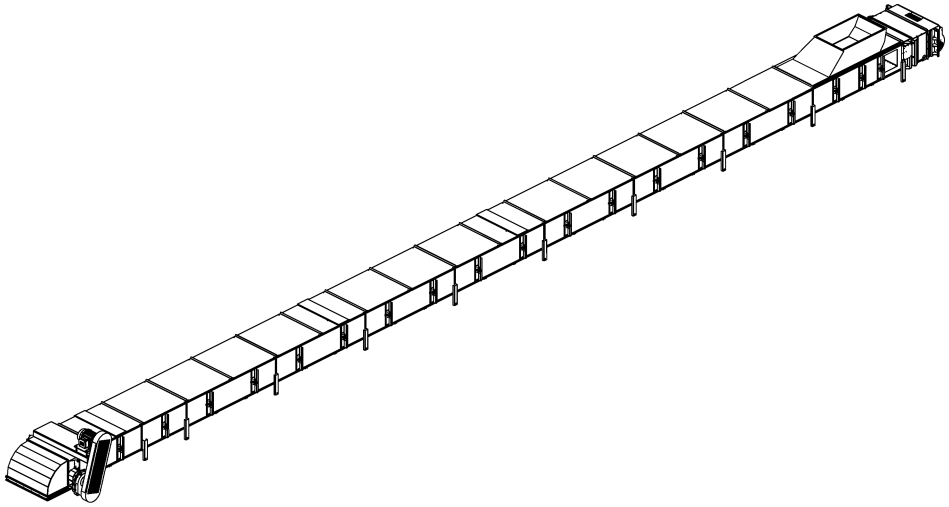

CE Compliant Enclosed Belt Conveyor

Roller Flo and 3i Roller Flo

Installation and Operation Manual - Original Instructions

PNEG-2114CE

Version: 5.0

Date: 11-18-21

PNEG-2114CE

DECLARATION IN ACCORDANCE WITH ATEX DIRECTIVE 2014/34/EU MACHINERY DIRECTIVE 2006/42/EC

AGCO Hungary Kft.
1117 Budapest,
Aliz Street 4,
Hungary

The GSI Group declares that the Enclosed Belt Conveyors

Models ****EBCI**-GV-***-X22

Meet the Essential Requirements of the ATEX Directive 2014/34/EC:

- Equipment Group II
- Equipment Category 2 (internal) / 3 (external)
- Combustible material Grain Dust
- Minimum ignition temperature 380°C
- Ex II2/3 Ex h IIIB D T125°C Db

We further declare that the Enclosed Belt Conveyors

Models ****EBCI**-GV-***-X21

Meet the Essential Requirements of the ATEX Directive 2014/34/EC:

- Equipment Group II
- Equipment Category 2 (internal) / 2 (external)
- Combustible material Grain Dust
- Minimum ignition temperature 380°C
- Ex II2/2 Ex h IIIB D T125°C Db

In accordance with the following standards:

- EN IEC 60079-0:2017
- EN ISO 80079-36:2016
- EN ISO 80079-37:2016

DECLARATION IN ACCORDANCE WITH
ATEX DIRECTIVE 2014/34/EU
MACHINERY DIRECTIVE 2006/42/EC

AGCO Hungary Kft.
1117 Budapest,
Aliz Street 4,
Hungary

Declaration of Incorporation 2006/42/EC Machinery Directive

We further declare that all the following models of conveyor:
****EBCI**-GV-***-***

Comply with the Essential Requirements of the Machinery Directive, excepting those required for Control Systems (Annexe 1, section 1.2). Provision for these must be made by the end user or installer.

The equipment above must not be put into service until the machinery into which it is to be incorporated has been declared in conformity with the provisions of all relevant Directives, or until these component have been assembled in the manner stated in the attached manufacturer's instructions.

This declaration is valid only when attached to the following manufacturer's manual: PNEG-2114CE

Signed: DocuSigned by: Daniel Nemeth ACBE46CACE554E3...

Name: Daniel Nemeth

Date: Dec 1, 2021 | 5:29 AM CST

All information, illustrations, photos, and specifications in this manual are based on the latest information available at the time of publication. The right is reserved to make changes at any time without notice.

Contents

Chapter 1 Introduction **6**
General Information 6
General Safety Statements 6
Replacement Parts 6

Chapter 2 Safety **7**
Safety Guidelines 7
Cautionary Symbols Definitions 8
Safety Cautions 9
Correct Use 13
ATEX Compliance of GSI Enclosed Belt Conveyors 14
Conveyor Belt 15
Bearing Temperature Monitoring 16
Belt Speed 17
Electrical Safety 17
Guarding of Moving Parts 19
Safety Sign-Off Sheet 20

Chapter 3 Decals **21**

Chapter 4 Installation **23**
Correct Installation 23
Supporting Structure 24
Placing Conveyor Sections on the Supporting Structure 24
Conveyor Assembly 25
Mid Loader Installation 26
Splicing the Belt 28
Belt Splice Protector 31
Belt Tensioning and Tail Section (Take-Up) Adjustment 32
Vulcanized Belt Splices 36
Installing the Drive (Shaft Mount Only) 37
Right Angle Reducer Drive Installation 39
Plow Installation 40
Tripper Installation 42

Chapter 5 Electrical Installation **45**
ATEX Statement 45
Safety Interlocks 45

Chapter 6 Operation **50**
Pre-Startup Procedure 50
Conveyor Start-Up 50
Initial Start-Up Precautions and Checks 52
Start-Up Procedure Checklist 52
Belt Tracking 54
Loading Material on the Belt 55

Chapter 7 Maintenance and Repair **56**
General Maintenance 56
Periodic Inspection 56
Lubrication 57
General Housekeeping 57
Bottom Liner Replacement 58
Head Pulley Lagging Replacement 58
Head Hood Removal 59

Chapter 8 Troubleshooting **60**

Chapter 9 ATEX Ignition Source Instructions **63**

Chapter 10 Appendix A - Reference Information **68**

Chapter 11 Warranty **69**

General Information

GSI reserves the right to improve its product whenever possible and practical to do so. We reserve the right to change, improve and modify products at any time without obligation to make changes, improvements and modifications on equipment sold previously.

This manual covers the installation and operation for the CE Compliant Enclosed Belt Conveyor. This manual provides guidelines for installing the product. You must retain a qualified contractor to provide on-site expertise. GSI IS NOT RESPONSIBLE FOR THE INSTALLATION OF THIS PRODUCT.

General Safety Statements

1. The conveyor is designed and manufactured with operator safety in mind. However, residual risk remains due to the nature of material handling, and specific material hazards. Use extreme caution at all times.
2. Modifications to equipment may cause extremely dangerous situations that could result in damage to the equipment as well as serious injury or death. Never modify the equipment.
3. GSI recommends that you contact the local power company to have a representative survey the installation to ensure wiring is compatible with their system and adequate power is supplied to the unit.

Replacement Parts

The GSI belt conveyor is a quality built piece of machinery. As with any machine, parts do wear out and fail. It is GSI recommendation that a small supply of spare parts be kept on hand to cover any minor breakdowns. A separate Spare Parts/Price List will be sent identifying the suggested spare parts. It is also necessary to check the certified drawings, which will list any special or custom components utilized on this equipment.

The certified drawings furnished with the conveyor list the components which are likely to require replacement. Replacements for any other components, including structural members, can be supplied upon request.

For direct parts orders or requests for technical assistance, contact your sales representative directly or the GSI office:

AGCO Hungary Kft.
1117 Budapest,
Aliz Street 4,
Hungary

Please have available the MODEL NUMBER, SERIAL NUMBER and CUSTOMER ORDER NUMBER of the equipment in question as well as the LOCATION where the conveyor is installed.

Safety Guidelines

Safety guidelines are general-to-specific safety rules that must be followed at all times. This manual is written to help you understand safe operating procedures and problems that can be encountered by the operator and other personnel when using this equipment. Read and save these instructions.

As owner or operator, you are responsible for understanding the requirements, hazards, and precautions that exist and to inform others as required. Unqualified persons must stay out of the work area at all times.

Alterations must not be made to the equipment. Alterations can produce dangerous situations resulting in SERIOUS INJURY or DEATH.

This equipment must be installed in accordance with the current installation codes and applicable regulations, which must be carefully followed in all cases. Authorities having jurisdiction must be consulted before installations are made.

When necessary, you must consider the installation location relative to electrical, fuel and water utilities.

Personnel operating or working around equipment must read this manual. This manual must be delivered with equipment to its owner. Failure to read this manual and its safety instructions is a misuse of the equipment.

ST-0001-4

Cautionary Symbols Definitions

Cautionary symbols appear in this manual and on product decals. The symbols alert the user of potential safety hazards, prohibited activities and mandatory actions. To help you recognize this information, we use the symbols that are defined below.

This symbol indicates an imminently hazardous situation which, if not avoided, **will result in serious injury or death.**

This symbol indicates a potentially hazardous situation which, if not avoided, **can result in serious injury or death.**

This symbol indicates a potentially hazardous situation which, if not avoided, **can result in minor or moderate injury.**

This symbol is used to address practices not related to personal injury.

This symbol indicates a general hazard.

This symbol indicates a prohibited activity.

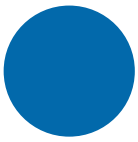

This symbol indicates a mandatory action.

ST-0005-2

Safety Cautions

Use Personal Protective Equipment

- Use appropriate personal protective equipment:

Eye Protection

Respiratory Protection

Foot Protection

Hearing Protection

Head Protection

Fall Protection

Hand Protection

- Wear clothing appropriate to the job.
- Remove all jewelry.
- Tie long hair up and back.

ST-0004-1

Follow Safety Instructions

- Carefully read all safety messages in this manual and safety signs on your machine. Keep signs in good condition. Replace missing or damaged safety signs. Be sure new equipment components and repair parts include the current safety signs. Replacement safety signs are available from the manufacturer.
- Learn how to operate the machine and how to use controls properly. Do not let anyone operate without instruction.
- If you do not understand any part of this manual or need assistance, contact your dealer.

ST-0002-1

Maintain Equipment and Work Area

- Understand service procedures before doing work. Keep area clean and dry.
- Never service equipment while it is operating. Keep hands, feet, and clothing away from moving parts.
- Keep your equipment in proper working condition. Replace worn or broken parts immediately.

ST-0003-1

Install and Operate Electrical Equipment Properly

- Electrical controls must be installed by a qualified electrician and must meet the standards set by applicable local codes (National Electrical Code for the US, Canadian Electric Code, or EN60204 along with applicable European Directives for Europe).
- Lock-out power source before making adjustments, cleaning, or maintaining equipment.
- Make sure all equipment and bins are properly grounded.

ST-0075-1

Stay Clear of Hoisted Equipment

- Always use proper lifting or hoisting equipment when assembling or disassembling equipment.
- Do not walk or stand under hoisted equipment.
- Always use sturdy and stable supports when needed for installation. Not following these safety precautions creates the risk of falling equipment, which can crush personnel and cause serious injury or death.

ST-0047-1

Operate Motor Properly

- All electrical connections must be made in accordance with applicable local codes (National Electrical Code for the US, Canadian Electric Code, or EN60204 along with applicable European Directives for Europe). Make sure equipment and bins are properly grounded.
- Lock-out power before resetting motor overloads.
- Do not repetitively stop and start the drive in order to free a plugged condition. Jogging the drive in this manner can damage the equipment and drive components.

ST-0009-3

Stay Clear of Rotating Parts

- Do not service equipment while it is in operation.
- Entanglement in rotating parts or exposed belts will cause serious injury or death.
- Keep all shields and covers in place at all times.
- Lock-out power source before making adjustments, cleaning or maintaining equipment.

ST-0077-1

Toxic Fume and Dust Hazard

- Do all work outside or in a well-ventilated area. Dispose of paint and solvent properly.
- Remove paint before welding or heating:
  - — Avoid potentially toxic fumes and dust. Hazardous fumes can be generated when paint is heated by welding, soldering, or using a torch.
  - — If you sand or grind paint, avoid breathing the dust. Wear an approved respirator.
  - — If you use solvent or paint-stripper, remove stripper with soap and water before welding.
  - — Remove solvent or stripper containers and other flammable material from area. Allow fumes to disperse at least 15 minutes before welding or heating.

ST-0043-2

Sharp Edge Hazard

- This product has sharp edges, which can cause serious injury.
- To avoid injury, handle sharp edges with caution and always use proper protective clothing and equipment.

ST-0036-2

Stay Clear of Slide Gate

- Keep hands away from slide gate opening. Slide gates can crush and dismember. Motor can start at any time.
- Lock-out power source before making adjustments, cleaning, or maintaining equipment.

ST-0049-1

Fall Hazard

- Ladders, stairways and platforms are for use by competent and trained personnel only. Do not allow children or other unauthorized persons to have access to the equipment.
- Access to the equipment must be restricted by the use of security fencing and lockable gates.
- Lower sections of ladders must be fitted with a lockable safety gate to prevent unauthorized access.
- Make sure that hot surfaces have had adequate time to cool before working on or in the equipment.
- Lock out and tag out power supplies and fuel supplies to all equipment.
- Do not attach lifting equipment to ladders or platforms.
- Do not go outside of the safety rails provided on elevated platforms.
- Do not work at heights during high winds, rain, snow, or ice storms.

ST-0056-1

Flying Material Hazard

- Flying material can cause severe eye injury or blindness.
- Wear safety glasses around operating equipment.

ST-0074-1

Correct Use

1. GSI belt conveyors are to be used for conveying free flowing agricultural seed and grains only.
2. They shall not be used for any other materials, such as powders, coal, rock, food stuffs or liquids.
3. Bulk density of grains conveyed with this equipment shall generally be in the range <=900kg/m^3.
4. Grain must be free from all foreign objects, such as stones, rocks, metal objects, wood etc. If necessary, the grain should run through a cleaner prior to being handled.
5. Personnel operating or working around the conveyor shall be competent and aware of safe operating procedures and how to respond in the event of a malfunction, fault or potentially dangerous situation.
6. Do not modify the conveyor in any way.
7. Do not exceed operating limits stated on the conveyor rating plate:
   a. Maximum length
   b. Ambient temperature limits
   c. Maximum belt speed
   d. Non-driven pulley rpm
   e. Maximum surface temperature
   f. Drive power
   g. Power supply
8. Observe and obey all warning labels placed on the conveyor.
9. Never operate the conveyor with guards, shields, safety covers or safety devices removed or disabled.
10. Never operate the conveyor when it is partially assembled or damaged.
11. Be aware that, as a result of the movement of grains and seeds, dust will be created. This can create hazardous situations due to:
    a. Potentially explosive environment
    b. Respiratory risks
    c. Obscured vision
    d. Overheating due to dust deposits
    e. Slippery walking surfaces
12. Dust should be suitably controlled, based on risk assessment, to eliminate or minimize these risks.
13. All equipment used with the conveyor shall be ATEX/IECEx certified for use in a potentially dusty environment, in accordance with the risk assessment, but at least to the level of protection provided by the conveyor. Refer to the rating plate for detail of conveyor ATEX rating. *(See Figure 2A on Page 14.)*
14. Dust is a hazard associated with belt conveyors. The majority of dust created will be contained within the conveyor; however dust will escape at inlets and outlets. System designers, installers and operators shall provide methods to minimize the risk of dust by using methods of containment, extraction and where necessary, personal protective equipment (respirators).

ATEX Compliance of GSI Enclosed Belt Conveyors

GSI belt conveyors may be provided with 3 levels of ATEX compliance:

1. Internal zone 21D, no external zoning (Ex II 2/-)
2. Internal zone 21D, external zone 22D (Ex II 2/3)
3. Internal zone 21D, external zone 21D (Ex II 2/2)
4. It is vital that you check the designation of your conveyor is correct for the zone into which it is to be installed. If in doubt consult an ATEX Expert. You will find the rating for your conveyor on the rating plate attached to the conveyor. *(See Figure 2A.)*

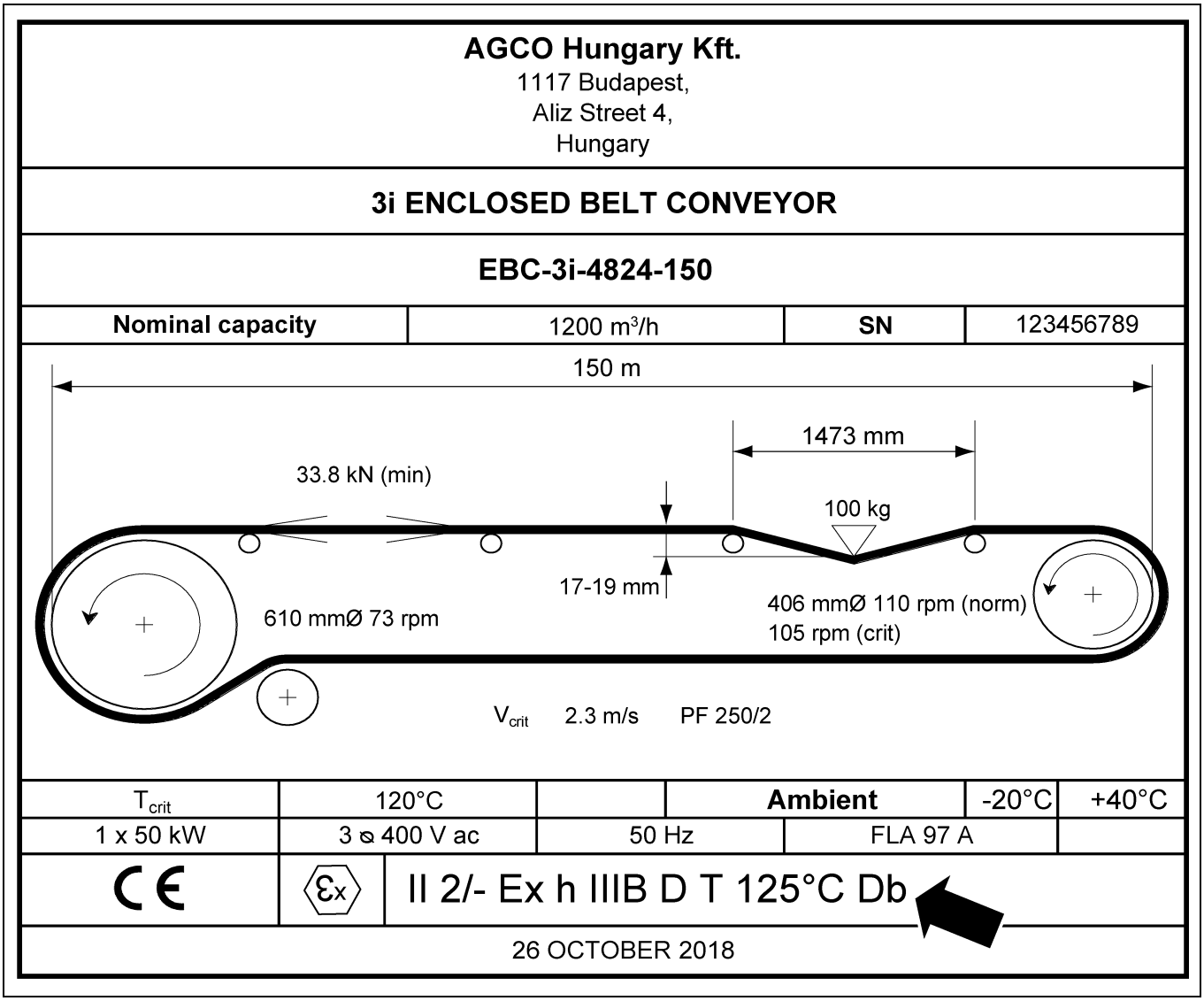

Figure 2A

5. Ensuring the conveyor continues to operate correctly and safety within the ATEX environment requires operator intervention to ensure potential ignition sources cannot become active. *See Pages 63-67* for a full list of identified ignition sources, with indication of the type and frequency of user intervention required.

Conveyor Belt

1. Correct installation of the belt is critical to ensuring and maintaining ATEX compliance. The belt must have the correct pre-tensioning and run in true alignment. True alignment can be checked by use of belt alignment sensors. Refer to the belt decal applied to your elevator boot for correct tensioning arrangements.

2. Correct pre-tension of the belt is achieved when the test weight of 100 kg, applied mid-span of the idling roller and directly across the full width of the belt, provides a deflection in accordance with that shown on your rating plate. *(See Figure 2B.)*

   NOTE: *This deflection is unique for each conveyor, so you must refer to the plate on your conveyor*.

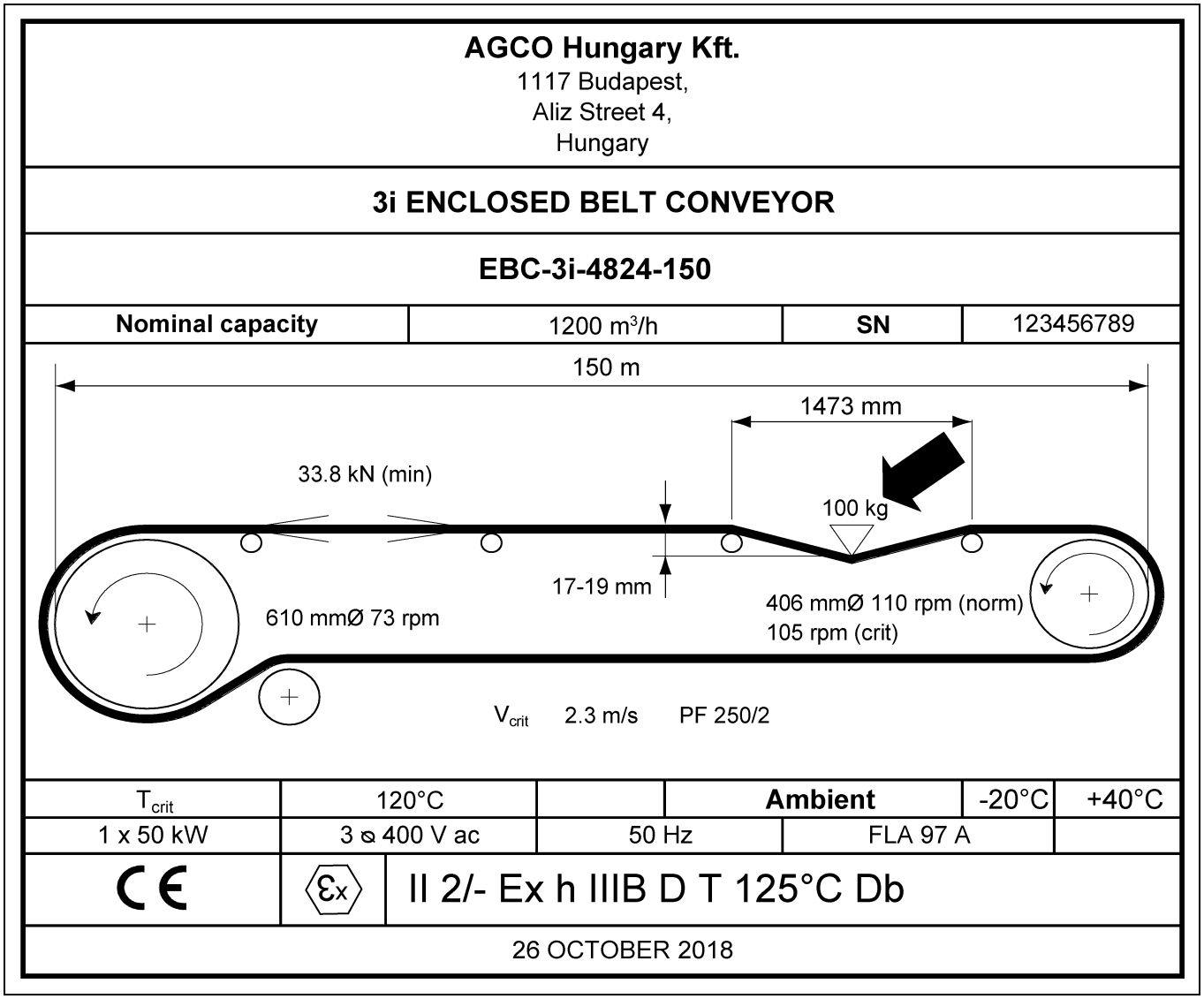

Figure 2B

3. Slipping belts may result in frictional heating. This is avoided by maintaining the correct tension, and by monitoring the non-driven pulley speed, according to the value S_{crit} given on the rating plate. In the event the pulley speed drops below this value, the conveyor should be stopped. *(See Figure 2C on Page 16.)*

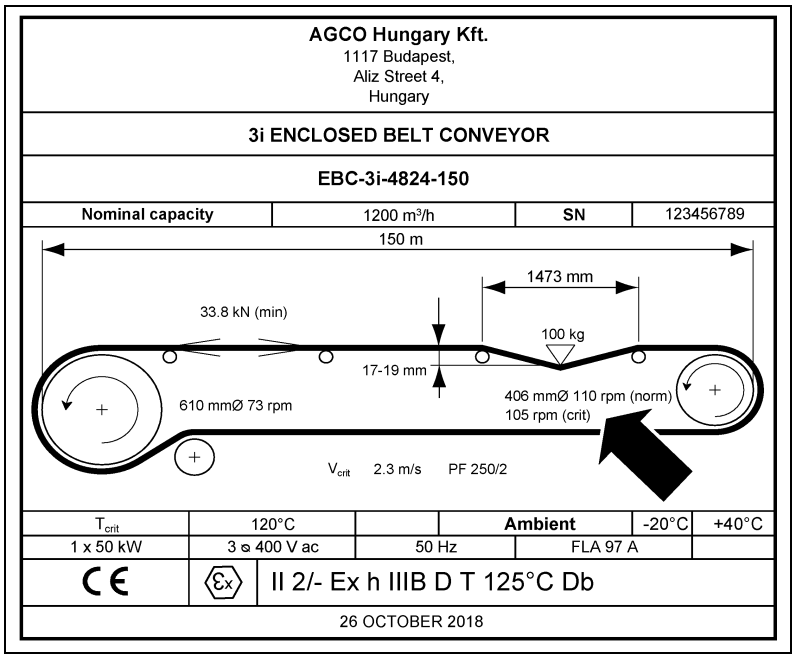

Figure 2C

4. Damage to the belt should be checked for, and if necessary the belt replaced. The belt may only be replaced using the same make and model of belt supplied at first installation. Failure to do so could result in an ignition source becoming active.

Bearing Temperature Monitoring

5. Where the elevator is installed in ATEX zone 21D, bearing temperatures shall be monitored, in accordance with T_{crit} give on the elevator rating plate. This is the critical temperature which if exceeded shall result in elevator shut down. In the event, the bearings should be checked for signs of failure, loss of lubrication and should be replaced or repaired before re-starting the elevator. *(See Figure 2D.)*

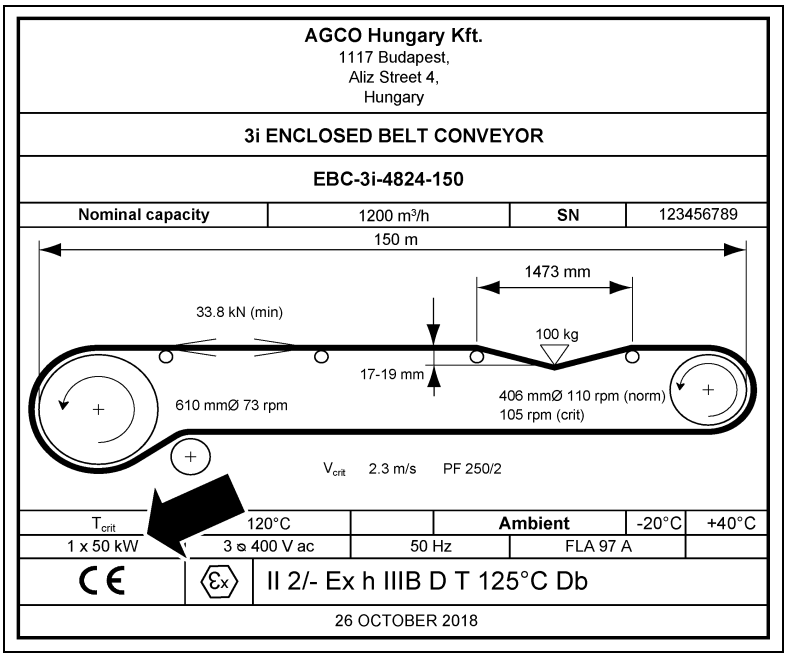

Figure 2D

Belt Speed

The belt speed may not exceed 5 m/s. The rated speed is give on the rating plate. Do not apply higher speed motors, speed control or gear boxes which could result in this speed being exceeded.

Explosion Release Panels

Belt conveyors are fitted with explosion pressure release panels to reduce the risk to personnel and equipment in the unlikely event of an explosion inside the conveyor.

1. Vents shall be left un-obscured to allow free venting.
2. Areas around the vents shall be left clear of work areas to reduce risks to personnel.
3. Where the conveyor is located inside an ATEX rated environment, possible vented explosions shall be ducted to outside the ATEX area. Ducts shall be designed so as not to reduce the venting efficiency of the vent.

Anti-Static Bonding

Electrical bonding to earth potential of every section of the conveyor is critical to preventing electro-static charging and potential spark ignition of dust within the conveyor.

1. Run a suitable protective earth (PE) conductor from the PE supply point to the conveyor. (This may double as the PE conductor to the electric motor.)
2. Bond the frame of the conveyor to the same PE conductor, via the conductor and anti-static bonding terminals.
3. Using a suitable electrical test meter, ensure the resistance in the PE circuit from the furthest point up to the PE supply point is no greater than 0.1 M ohm. This must include pulleys, shafts and bearings. Where this figure cannot be achieved, supplementary PE bonding conductors shall be fitted.

Electrical Safety

Electrical installation shall be designed, installed and tested in accordance with EN60204:

Equipment shall include:

1. Fuse protected main power supply.
   a. The electrical supply should include earth leakage protection, eg. residual current device (RCD) or residual current circuit breaker (RCCB), to provide automatic disconnection in the event of a fault.
2. Lockable main safety disconnect.

   a. Disconnects all electrical power.

3. Lockable motor service disconnect.

   a. Adjacent to each motor (or group of motors).

   b. Disconnects all power to the motors.

4. Emergency stops.

   a. Stops all equipment immediately when pressed.

   b. Must remain engaged until manually disengaged.

   c. Equipment shall not immediately re-start when the emergency stop is re-set.

5. Door safety interlocks - where doors provide access to dangerous machinery.

   a. Immediately stops and prevents re-start of all equipment when the door is open.

   b. Equipment shall not immediately re-start when the door in closed.

   c. Safety switches shall be SIL3 in accordance with IEC62061:2005.

   d. Safety circuits should be Category 3 in accordance with EN954-1:1997 or PLc in accordance with ISO 13849-1:2006.

6. The electrical supply must include a properly designed protective earth system (PE), with connection to all exposed conductive parts.

7. All motors shall be connected to protective earth at the terminal provided.

8. The control system shall include,

   a. Short circuit protection.

   b. Start/stop controls (labelled 1 and 0 respectively).

   c. Equipment shall not immediately re-start following re-establishment of power.

9. All electrical design, installation and testing must be carried out by a qualified electrical engineer, in accordance with EU Directives and Standards, local laws and codes.

Guarding of Moving Parts

The moving parts of the conveyor are all fully enclosed, except where inlets and outlets are fitted.

1. During installation, all inlet and outlet points must be enclosed or rendered inaccessible.
2. If grain is required to enter or exit an open conveyor, inlet and outlet spouts or guards must be used, to prevent the risk of contact with the moving belt inside the conveyor.
3. Never operate the conveyors with guards removed, disabled or damaged.

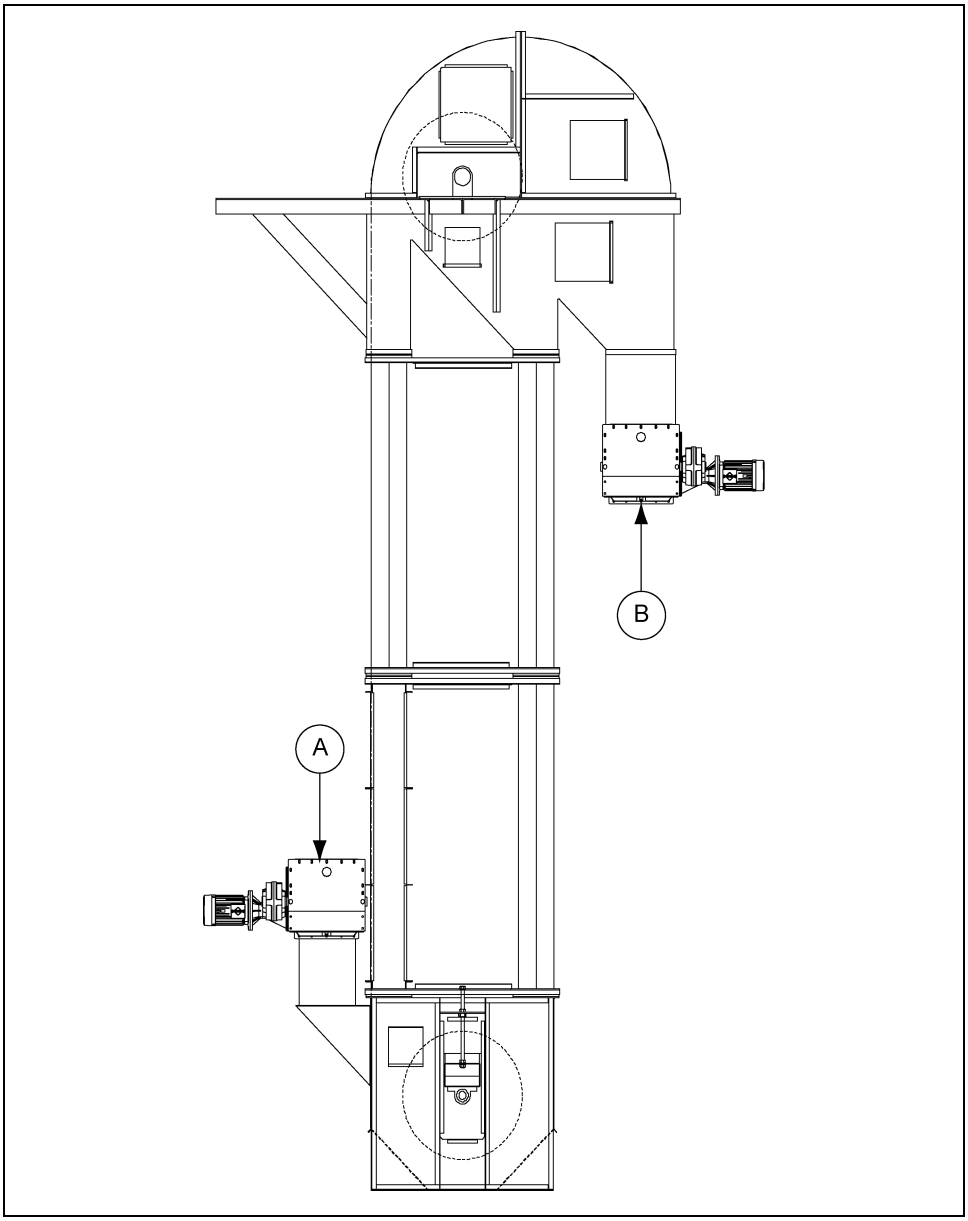

Figure 2E *Enclosed Inlet and Outlet Points*

Ref #	Description
A	Example Enclosed Inlet Conveyor Feeding Elevator
B	Example Enclosed Outlet Feeding Conveyor

Safety Sign-Off Sheet

Below is a sign-off sheet that can be used to verify that all personnel have read and understood the safety instructions. This sign-off sheet is provided for your convenience and personal record keeping.

Date	***Employee Name***	***Supervisor Name***

ST-0007

The safety decals on your equipment are safety indicators which must be carefully read and understood by all personnel involved in the installation, operation, service and maintenance of the equipment.
To replace a damaged or missing decal, contact us to receive a free replacement.

Contact:

GSI Group
1004 E. Illinois St.
Assumption, IL. 62510
Phone: 1-217-226-4421

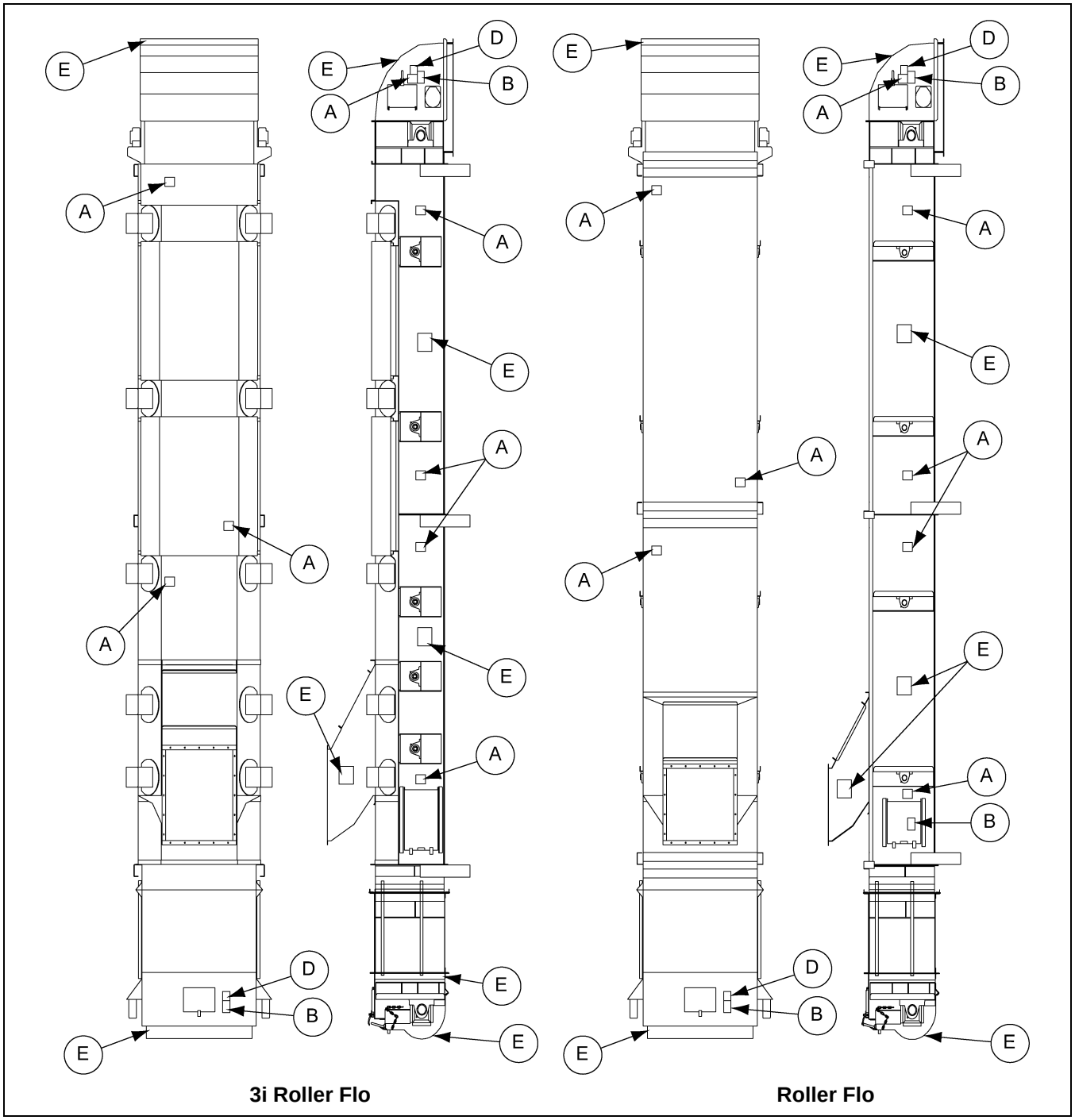

Figure 3A *Roller Flo Conveyor Safety Decal Locations*

Ref #	Decal #	Decals	Description
A	DC-2416	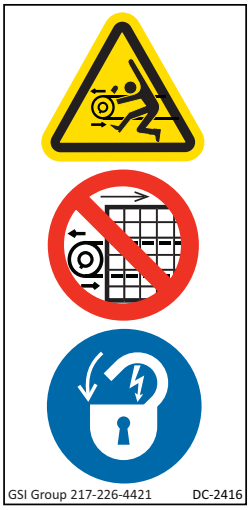	Exposed Parts and Belts
B	DC-2417	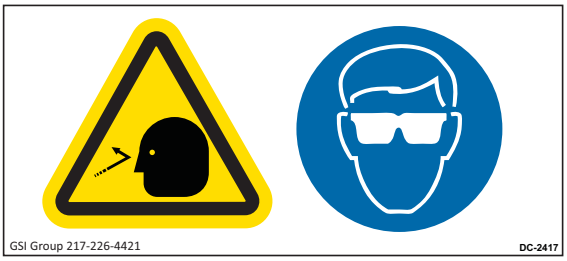	Eye Protection
C	DC-2480	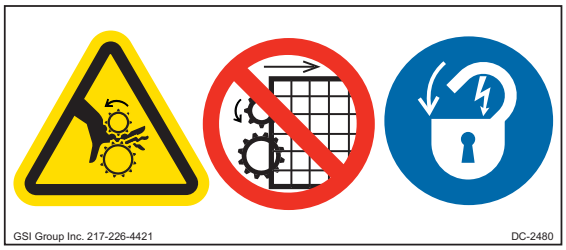	Moving Parts and Exposed Gears
D	DC-2163	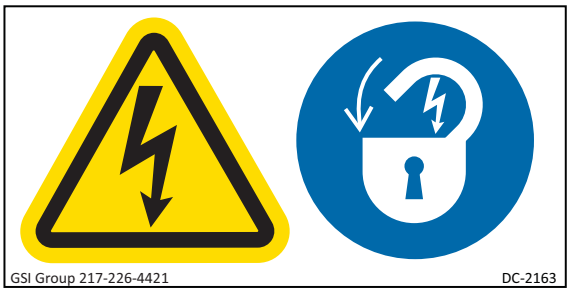	Lock Out Machine
E			GSI Logo

Correct Installation

1. Conveyors shall be installed only by competent engineers.
2. Full compliance with Directives and standards applicable to this equipment is the responsibility of the equipment installer.
3. Carefully inspect the shipment for damage upon arrival. Verify that the quantity of parts actually received corresponds to the quantity shown on the packing slip. One or more cartons containing the fasteners required for assembly are included with the shipment.
4. Inspect all parts before installation.
5. Damaged parts shall not be used.
6. Supporting structures shall be designed by a Structural Engineer and capable of carrying the full mechanical and environmental loads imposed by the conveyor.
7. Where conveyors are to be installed in inaccessible locations (eg: at height), safe access equipment shall be provided, such as stairs, fixed ladders, access platforms and catwalks. Operators must have access for all service points on the conveyor. Access equipment shall comply with relevant parts of EN14122.
8. Use safe lifting equipment for raising and lowering conveyor sections.

WARNING

Do not attempt to lift a fully assembled conveyor.

9. The conveyors are not designed to be self-supporting when erected. Supporting structures are required for horizontal and vertical support. *(See Figure 4A on Page 24.)*
10. Do not use the conveyor to support other equipment such as cleaners, distributors, spouting, etc. Separate structures must be provided for any accessory equipment.
11. The supporting structure should be in place and completely assembled before the conveyor sections are placed for assembly.
12. Place one section of the conveyor at a time in order to reduce the chance of damage to the equipment by lifting more than one section at a time.
13. Conveyors must be installed straight, true and horizontal, unless specified for use on an incline. Failure to do so will result in incorrect operation, premature wear, damage and potential frictional heating of the belt, resulting in fire or explosion.

Supporting Structure

1. *Figure 4A* illustrates the general type of acceptable support structure.
2. Conveyor must be supported at each section joint (A). Refer to the certified drawing for location and attachment of the short section.

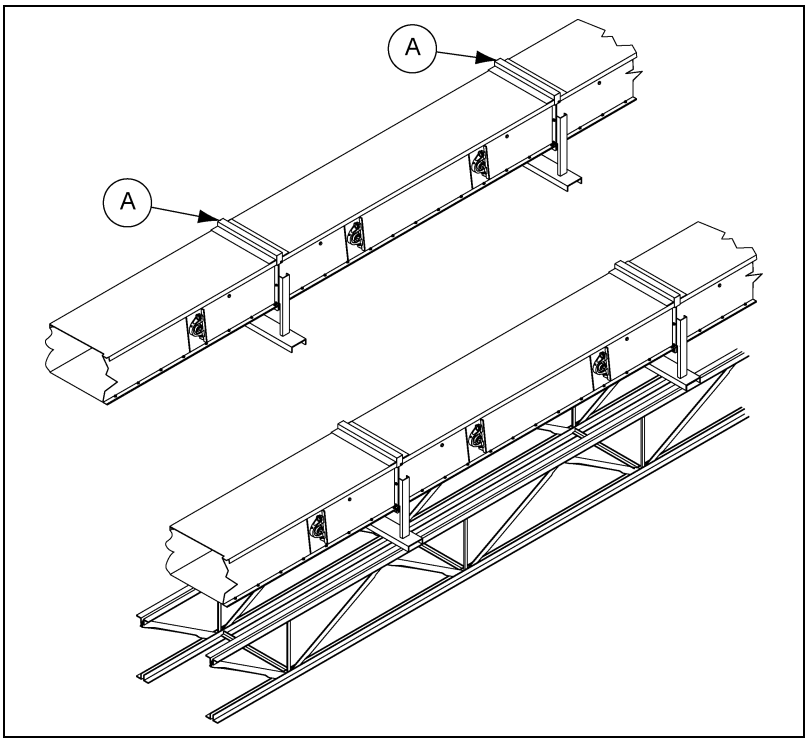

Figure 4A *Conveyor Supporting Structures*

Ref #	Description
A	Support conveyor at each (3 m) section joint

DANGER

Do not attempt to hoist a completely assembled conveyor into position onto its supporting structure. Death or serious injury could result.

Before lifting any of the conveyor sections, make sure hoisting machinery capacity exceeds the weight of the heaviest section.

Make certain that the chains, cables, or slings used are rated for overhead hoisting duty and of sufficient lifting capacity for the heaviest conveyor section to be lifted.

Placing Conveyor Sections on the Supporting Structure

1. The supporting structure should be in place and completely assembled before the conveyor sections are placed for assembly.
2. Place one section of the conveyor at a time in order to reduce the chance of damage to the equipment by lifting more than one section at a time.
3. The sections must be placed square and true on the supporting structure.

Conveyor Assembly

Since the loading of the material on the conveyor belt is the most important part of the conveyor working correctly, conveyor installation should begin by positioning the loader section under the discharge chute of the feeding equipment. After the loader section is securely fastened into place, assembly works forwards through the intermediate sections, ending with the placement of the head section. Also the tail may be attached to the end of the loader at any time after the loader is in its proper location. This is the generally accepted practice of conveyor installation. Your situation may require that assembly be done in some other order. Refer to the certified drawing for location of short section.

1. A chalk line or other instruments should be used to ensure that the conveyor is being assembled in a straight manner and each section should be squared with the previous one. The cross section of the conveyor should be level.
2. Position the loader section under the discharge chute of feeding equipment.
3. There may be one or more intermediate sections in a complete Roller Flo conveyor. Refer to the certified drawing for locations of all sections.
4. Apply silicone to the flanges (D) along the side panels and bottom of the two (2) sections to be joined. Mate the first intermediate section with the loader section. Fasten sections with supplied grade 136.6 mm diameter hex head cap screws and nuts. Sections may be assembled in any order unless otherwise specified on the certified drawing.
5. The bottom flanges of each conveyor section have several 9.6 mm diameter holes. *(See Figure 4B.)* As each conveyor section is assembled to the preceding section, drive bull-nose alignment pins (C) through the matching pairs of the smaller 9.6 mm diameter holes. This arrangement ensures that liners of adjoining conveyor sections form a smooth, even surface with no lip or ledge in which the belt might otherwise catch. Use a straightedge to verify that the liner surfaces of adjoining conveyor sections are even. If they are not, find and correct the problem.

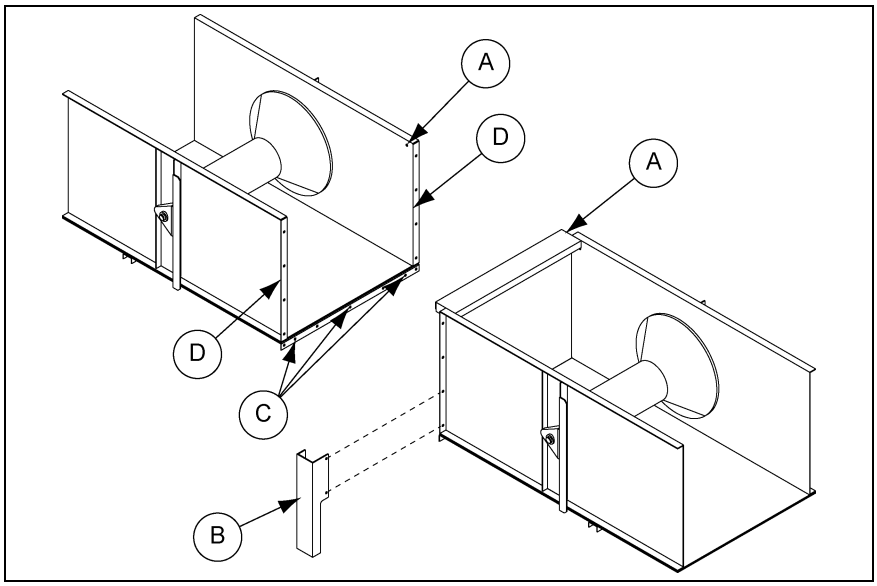

Figure 4B *Conveyor Section Assembly*

Ref #	Description
A	Upper Support
B	Leg

Ref #	Description
C	Alignment Pins
D	Apply Silicone to Flanges

6. Attach a pair of the optional support legs (B) and complete fastening the two (2) conveyor sections together as shown in *Figure 4B on Page 25.* Support legs (B) are optionally furnished in right hand/ left hand sets. One set is required at each conveyor section joint to ensure proper alignment and support.
7. As each conveyor section is mated with the preceding section. Remove the lids and loosen the upper support channel and rotate it so that it connects to the next section of the conveyor. Align the holes of the channel and the matching holes in the next section and bolt.
8. Continue to assemble conveyor sections as explained in *Steps 3-7* until all conveyor sections are assembled.
9. Install head section.
10. Install tail section. Make certain at this time that the take-up is in its fully retracted position to allow for easiest connection of belt ends for splicing.
11. Drive out the alignment pins (C). Replace them with 9.6 mm diameter hex head cap screws and nuts which have been furnished with the conveyor.

Mid Loader Installation

Belt conveyors often require the use of multiple inlets to assist in unloading bins or silos. The procedure outlined below describes the steps in which a mid loader assembly can be installed. *Figure 4C on Page 27* illustrates the mid loader installation procedure. Similarly, a low capacity inlet should be installed following the same steps.

1. Remove any lids near the location of where the loader assembly is to be installed. Also remove any upper supports that may interfere with the skirting below the loader.
2. Locate the loader assembly onto the top of the trunking section where the lids have been removed. The skirting on the bottom of the loader should extend in the direction the material will be traveling down the conveyor.
3. Slide the loader assembly along the top of the trunking sections until the ideal location has been reached.
4. Drill any necessary holes into the top flange of the trunking section to match the holes provided in the loader assembly (B). Once holes have been drilled, bolt the loader assembly into place.
5. Trim lids to length and re-install enclosing any open area of trunking.
6. Install provided lid seals to cover any seams between lids (D).

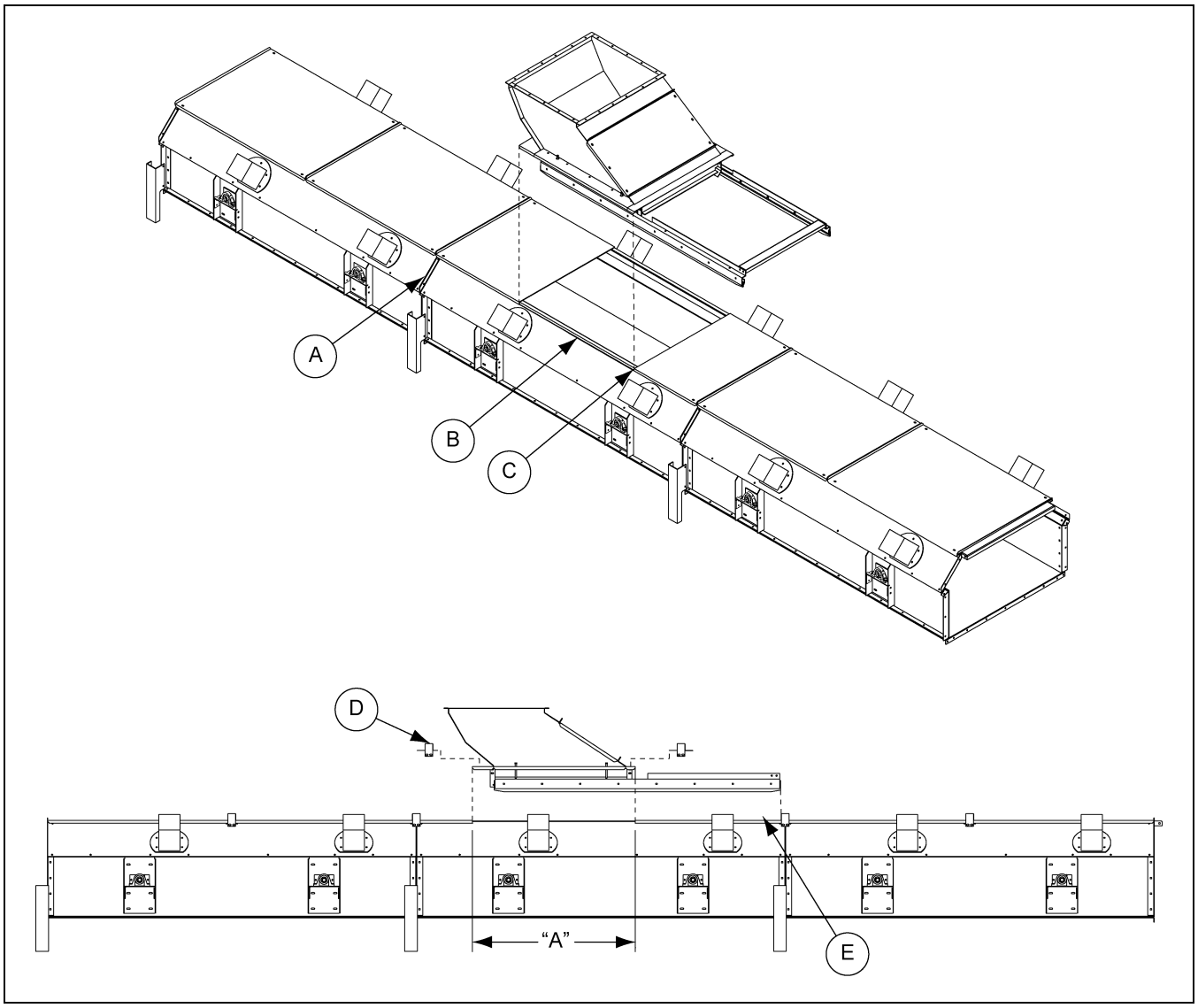

Figure 4C *3i Roller Flo Mid Loader Installation*

Ref #	Description
A	Apply silicone at section gaps when assembling trunking.
B	Drill any necessary holes in upper side panel to match hole spacing in loader weldment.
C	Cut lids in desired location. (Opening size should match length of loader weldment.)
D	Use provided lid seals to cover any seams.
E	Remove lid(s) to locate loader assembly onto top of reclaim section.

Splicing the Belt

Upon initial installation of the belt, the tension should be checked within a couple hours of belt operation as the belt will tend to rapidly “break-in” upon initial start-up. Pre-stretching the belt prior to splicing will help to minimize the duration of the “break-in” period.

Pre-stretching the belt is recommended for long conveyors or for shorter take-up adjustment lengths. If the operating tension of the belt is known before-hand, pre-stretching should be done with that tension. Using come-alongs is a good way to stretch the belt. If time allows, pre-stretching for a couple days or even a week is a good way to reduce the “break-in” period. In addition, during the “break-in” period, the belt can “walk” along the tail pulley, that is, it can move from side to side. This is a normal occurrence and pre-stretching can help to reduce the effects.

Once the conveyor has been fully assembled and all bolts tightened, the belt may now be fed through the conveyor. Check to make sure the take-up is fully retracted for later tensioning of belt. Some may prefer to place a small amount of general purpose flour or grain dust on the bottom of the conveyor to help prevent the belt from sticking to the bottom liner during installation and start-up. Make sure the top side of the belt is facing up on the top of the idlers and facing down toward the linear on the bottom of the conveyor. The following procedure will ensure a proper belt splice.

1. Square belt ends and cut to length. Square both belt ends by marking three (3) center points along belt at 305 mm to 914 mm (1' to 3') intervals. Draw an average center line using these center points as a guide. Place one leg of a large steel square along the marked center line and position the other leg of the square at the point where the square cut is to be made. Draw a line along the square’s leg which is perpendicular to the center line and extend it entirely across the belt. Make sure the cut is clean, square and straight. A cut made along this line will be properly squared with the belt. *(See Figure 4D.)*

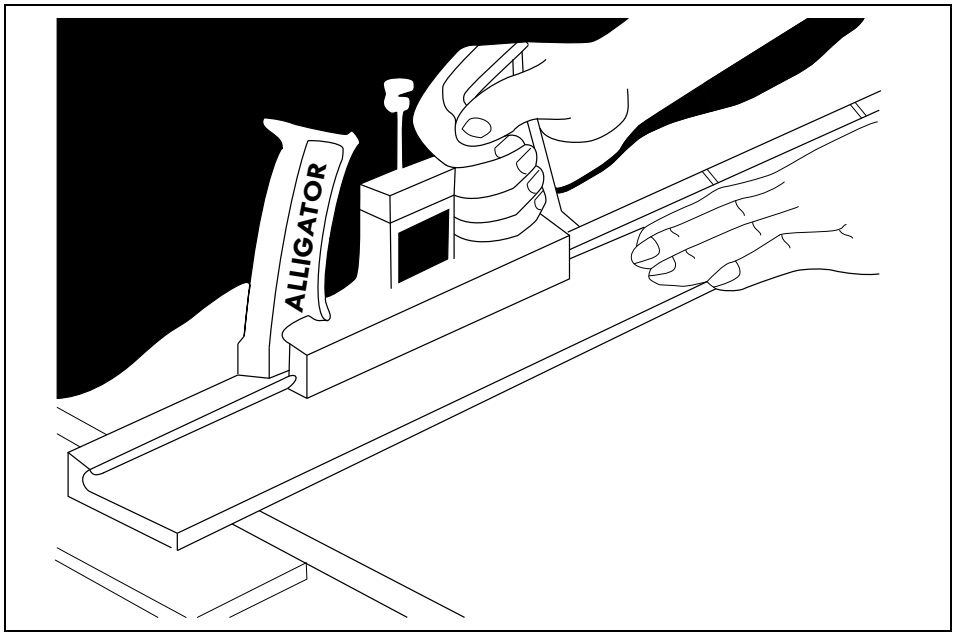

Figure 4D

2. Support belt ends with wood plank. Nail Flexco Templet in position with belt ends tight against lugs. Templet nails are in bolt bag. *(See Figure 4E on Page 29.)*

3. Punch or bore bolt holes using an impact tool with Flexco Power Punch or Flexco Power Boring Bit speeds hole boring operation. Remove templet. Leave plank under belt ends for a work surface. All work can be done from the top of the belt. *(See Figure 4F on Page 29.)*

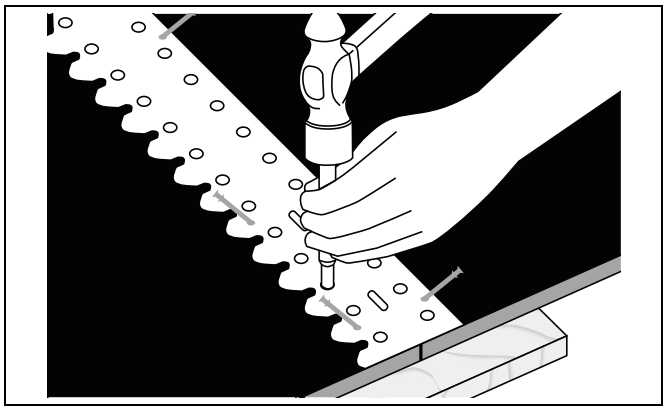

Figure 4E

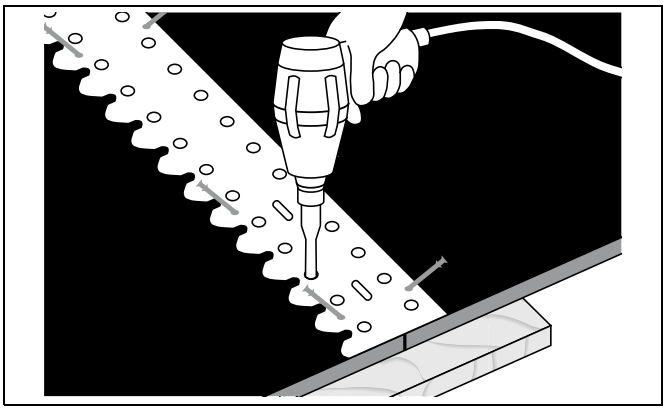

Figure 4F

4. Assemble bolts in bottom plates. Snap clip over heads of bolts. Fold one end of belt back out of the way. Then insert bolts from under side along one row of holes. *(See Figure 4G.)*

5. Using the notches in the templet to align the opposite row of bolts, place the end of the belt over the bolts. Press belt onto bolts with hands. Remove templet. Continue to press belt until it is in place. *(See Figure 4H.)*

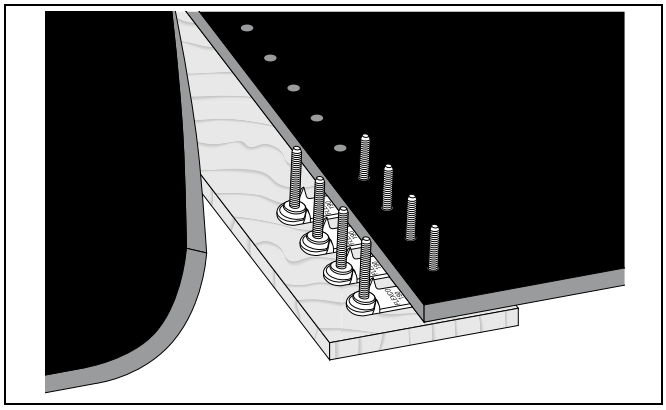

Figure 4G

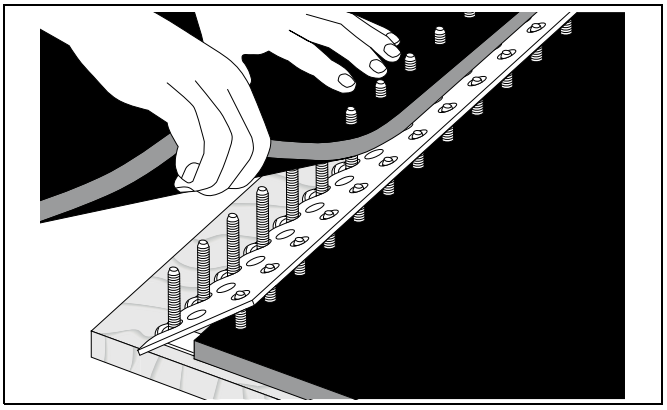

Figure 4H

6. Place top plate over one bolt. Insert Bolthorn Tool through the other plate hole and over the second bolt to pry it into place. *(See Figure 4I.)*

7. Assemble all top plates the same way as in direction 6. Start nuts down by hand far enough so that wrench will engage bolts. *(See Figure 4J.)*

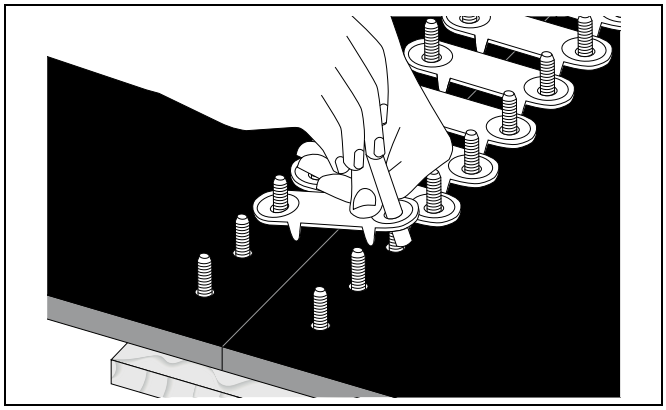

Figure 4I

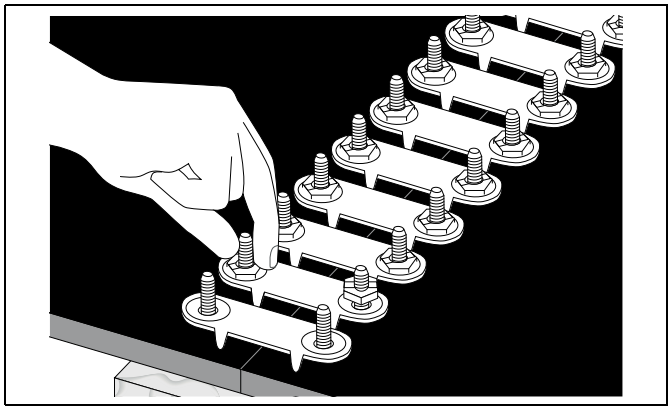

Figure 4J

8. Before tightening fasteners, cut a piece of Flexco-Loc Tape three (3) times the width of the belt plus 6" and cut a point on one end. Thread pointed tape between fastener teeth and top of belt, back through the bottom plates, and across the top again. This will help eliminate belt ripple and keep moisture and fine particles from deteriorating the end of the belt and increase belt life. *(See Figure 4K.)*
9. Pull tape tight and hold in position by tightening a fastener at each end of the splice. Then snug down all other plates. *(See Figure 4L.)*

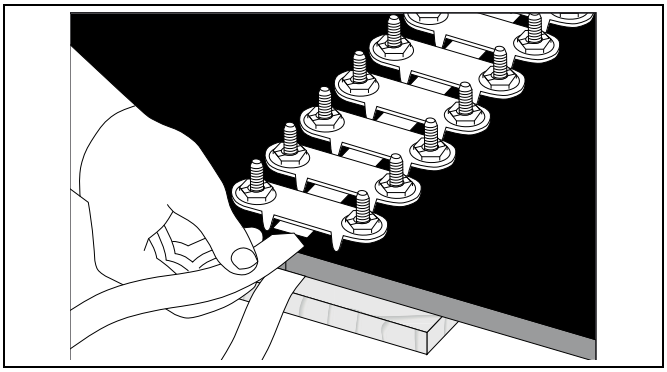

Figure 4K

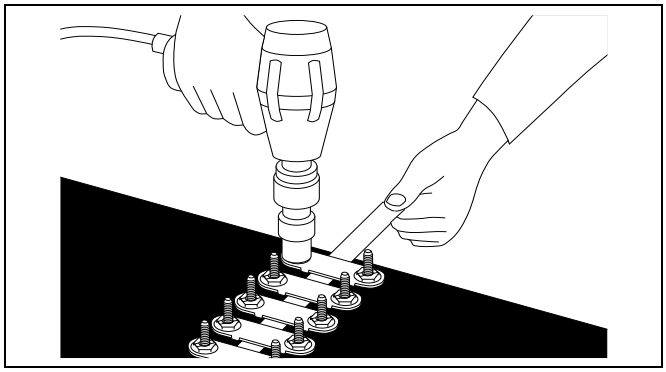

Figure 4L

10. Tighten all fasteners from **EDGES to CENTER**. Tighten all nuts uniformly. The Flexco Power Tool Wrench used with an impact tool will speed this step considerably. *(See Figure 4M.)*
11. Hammer plates in belt with metal or hard wood block in between bolts. Then retighten nuts. *(See Figure 4N.)*

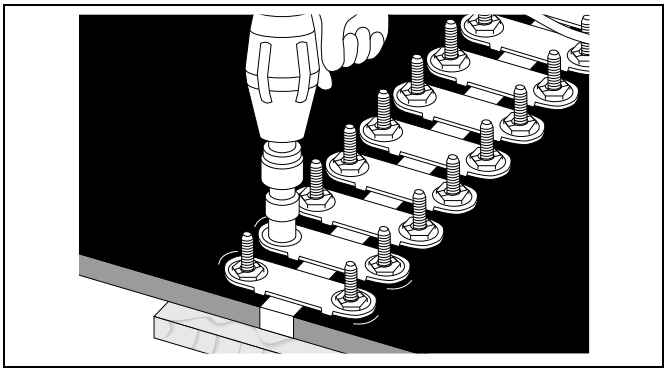

Figure 4M

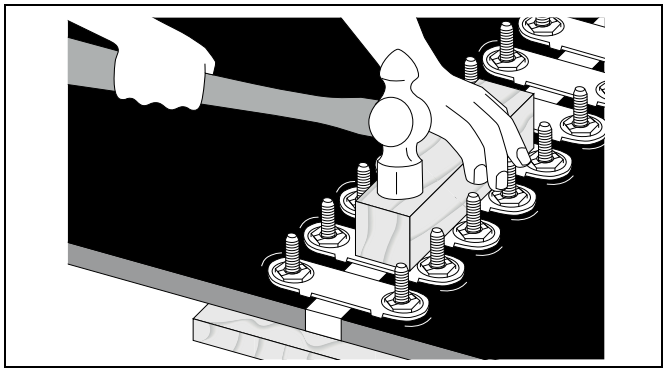

Figure 4N

12. Break off excess bolt ends using the two (2) bolt breakers. On belts thicker than 9.6 mm rubber covers, retighten all nuts after a few hours of running. Grind sharp edges of broken bolt ends until they are smooth and do not protrude.*(See Figure 4O.)*

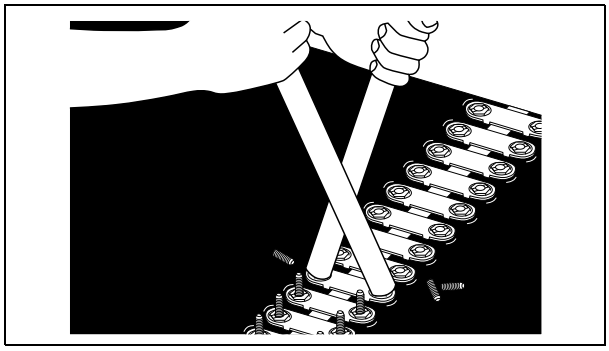

Figure 4O

Belt Splice Protector

Once the belt has been spliced and all nuts tightened, the belt splice protector is to be installed. The splice protector (A) is to be placed in front of the splice going with the flow of material (C). *See Figure 4P* for proper spacing.

1. Assemble bolts (F) in bottom plates (E). Snap clip over heads of bolts (F). Then insert bolts (F) from under side belt along the row of holes.
2. Place splice protectors (A) on top side of belt.
3. Place top plate (D) over one bolt. Insert Bolthorn Tool through the other plate hole and over the second bolt to pry it into place.
4. Assemble all top plates (D) the same way as in direction 3. Start nuts down by hand far enough so that wrench will engage bolts.
5. Tighten all fasteners. Tighten all nuts (G) uniformly. The Flexco Power Tool Wrench used with an impact tool will speed this step considerably.
6. Hammer plates in belt with metal or hard wood block in between bolts (F). Then retighten nuts (G).
7. Break off excess bolt ends using two (2) bolt breakers. On belts with thicker than 9.6 mm rubber covers, retighten all nuts after a few hours of running. Grind sharp edges of broken bolt ends until they are smooth and do not protrude.
8. Belts longer than 46 m (150') will be provided with additional splice protector kits (one kit for every 46 m (150') addition). The additional splice protectors should be located every 46 m (150') of belt length. This provides for additional clean out of the bottom sections and tail.

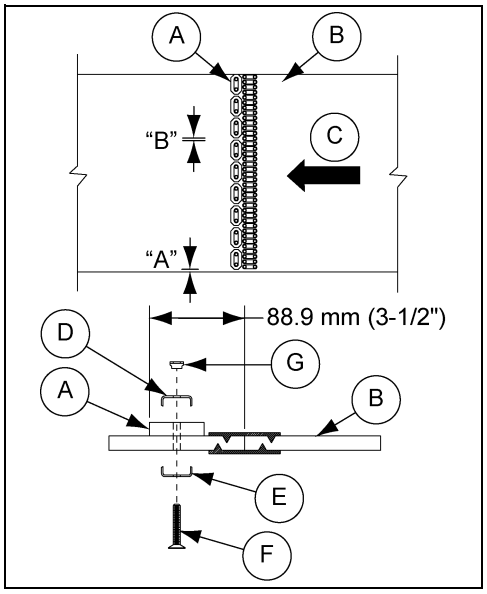

Figure 4P *Belt Splice Protector Layout*

Splice Protector Dimensions		
Belt Width	**"A"**	**"B"**
18	20.6 mm (13/16")	15.8 mm (5/8")
24	8.7 mm (11/32")	8 mm (5/16")
30	15.8 mm (5/8")	14.2 mm (9/16")
36	4.7 mm (3/16")	9.6 mm (3/8")
42	15.8 mm (5/8")	12.7 mm (1/2")
48	4.7 mm (3/16")	9.6 mm (3/8")
54	11 mm (7/16")	12.7 mm (1/2")
60	4.7 mm (3/16")	9.6 mm (3/8")
66	4.7 mm (3/16")	6.3 mm (1/4")
72	4.7 mm (3/16")	9.6 mm (3/8")

Ref #	Description
A	Splice Protector
B	Material Carrying Side of the Belt
C	Material Flow
D	Top Plate

Ref #	Description
E	Bottom Plate
F	Bolt
G	Nut

Belt Tensioning and Tail Section (Take-Up) Adjustment

The following steps will assist in properly adjusting the take-up to ensure proper tension in the belt during normal operation. *Figure 4S* and *Figure 4T on Page 33* can be used to assist in the following procedures.

1. Correct tension of the conveyor belt is critical to the function and safety of the conveyor. If the belt is allowed to run too loose, belt slip will occur and can result in frictional heating and potential ignition an explosive dust/air mixture.
2. The required minimum belt pre-tension is given for each conveyor on the rating plate. *(See Figure 4Q.)*

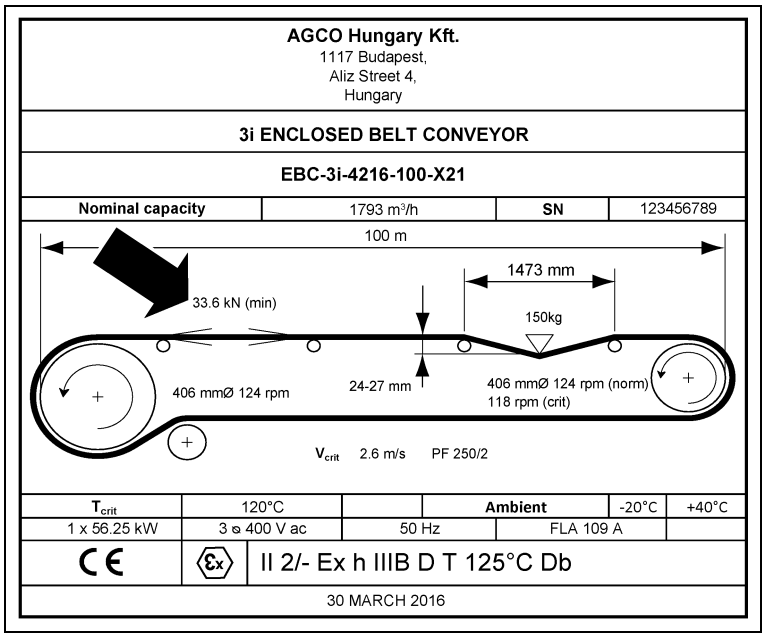

Figure 4Q *Rating Plate Showing Minimum Belt Pre-Tension*

3. Each conveyor is provided with a screw type take-up mechanism. *(See Figure 4R.)*

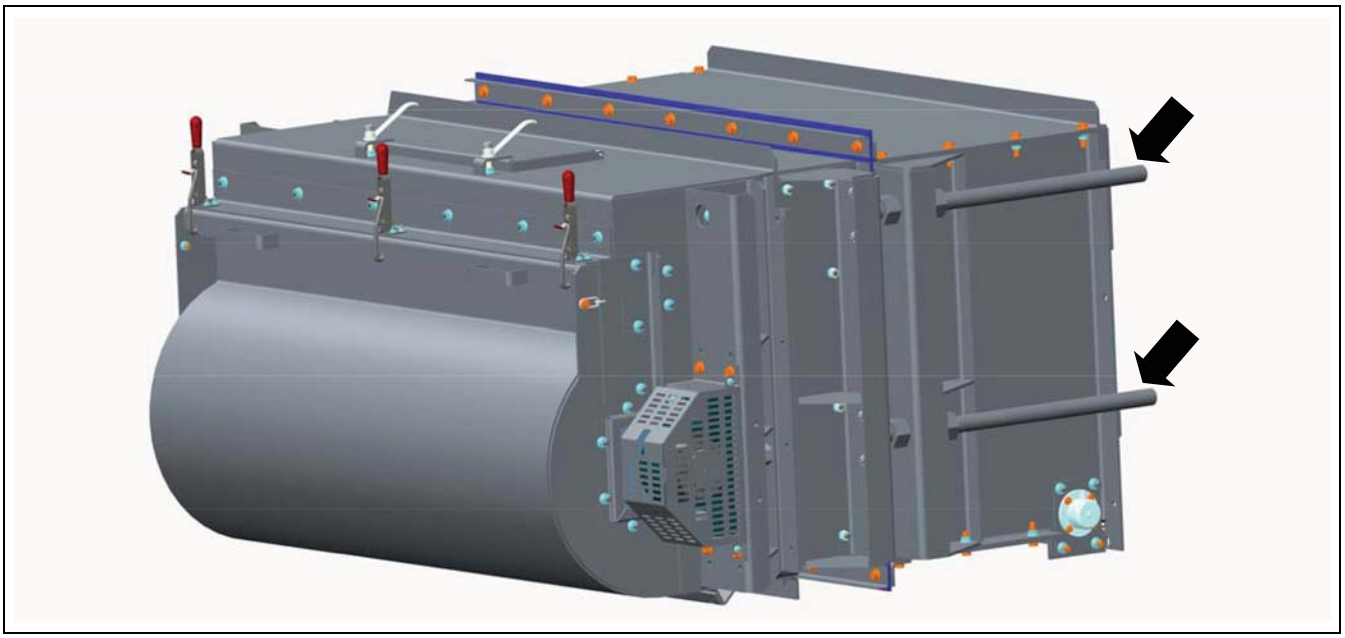

Figure 4R *Belt Take-Up Mechanism*

4. Correct belt tension is checked by measuring the deflection of the belt mid-way between a flat section between idler rollers or for 3i conveyors, between belt supports across the top of the conveyor.

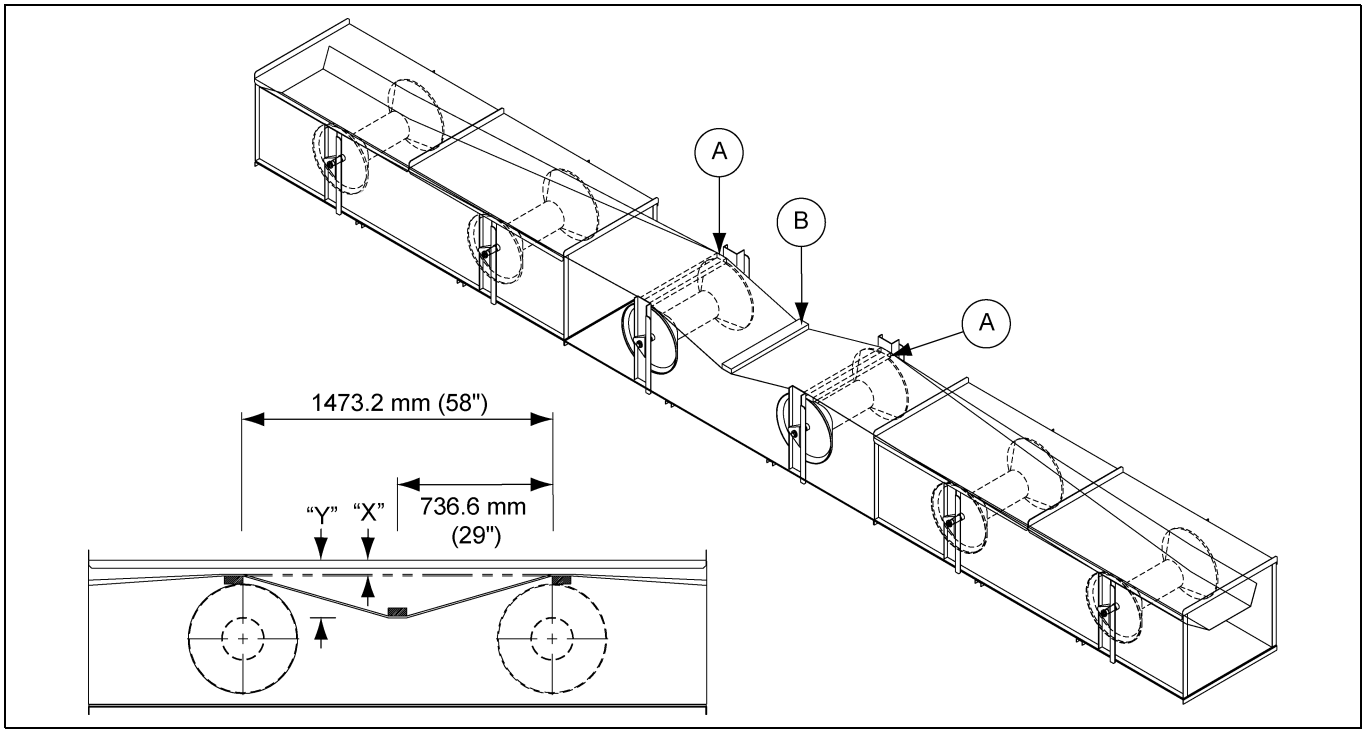

Figure 4S *Standard Roller Flo Belt Tensioning Procedure*

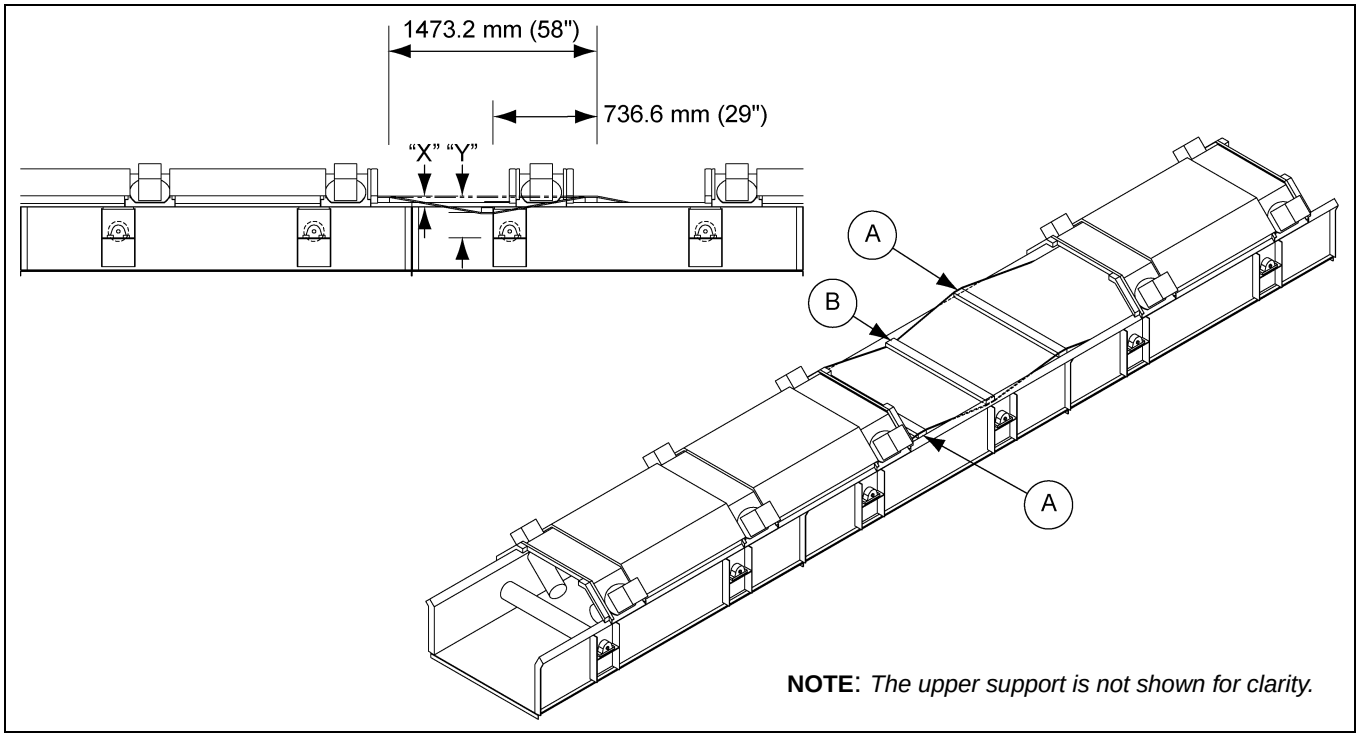

Figure 4T *3i Roller Flo Belt Tensioning Procedure*

Ref #	Description
A	Support Boards

Ref #	Description
B	Weighted Board

5. Select a position at least three (3) idlers away from the head or tail pulley.

6. The support spacing should be as given on the rating plate. *(See Figure 4U.)*

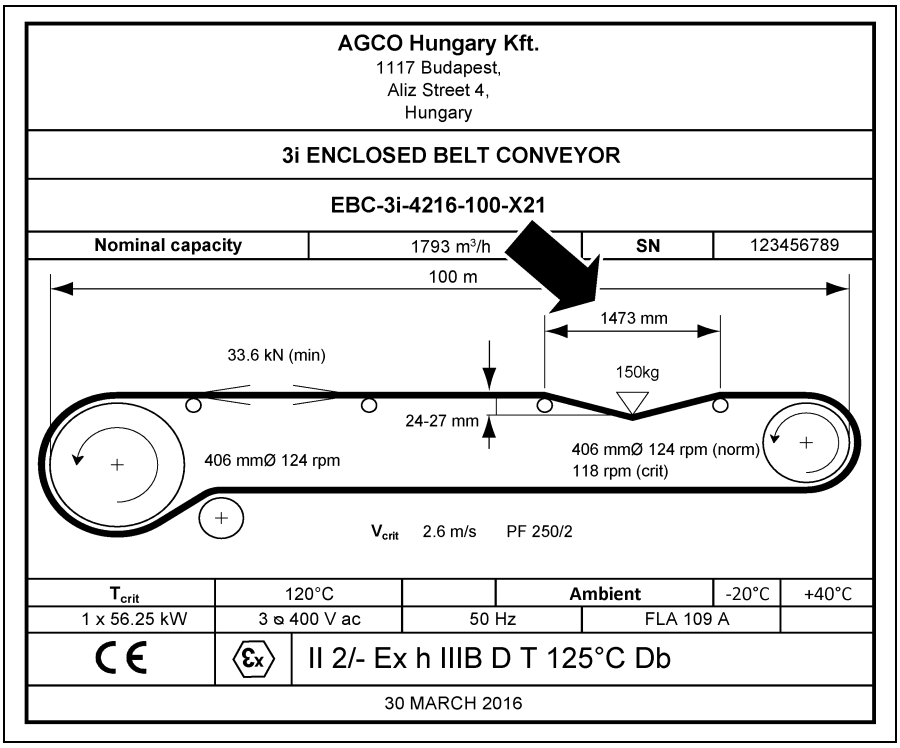

Figure 4U *Correct Support Spacing for Belt Tensioning*

7. The required minimum and maximum deflection is marked on the rating plate. *(See Figure 4V.)*

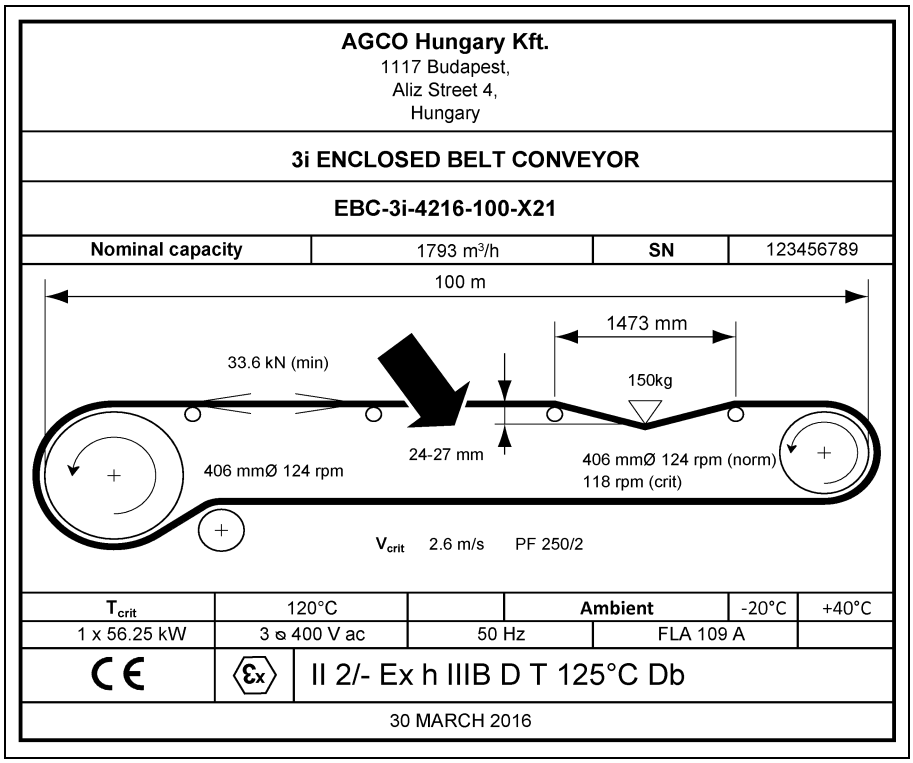

Figure 4V *Rating Plate Showing Belt Deflection*

8. The required test weight is also shown on the rating plate. *(See Figure 4W.)*

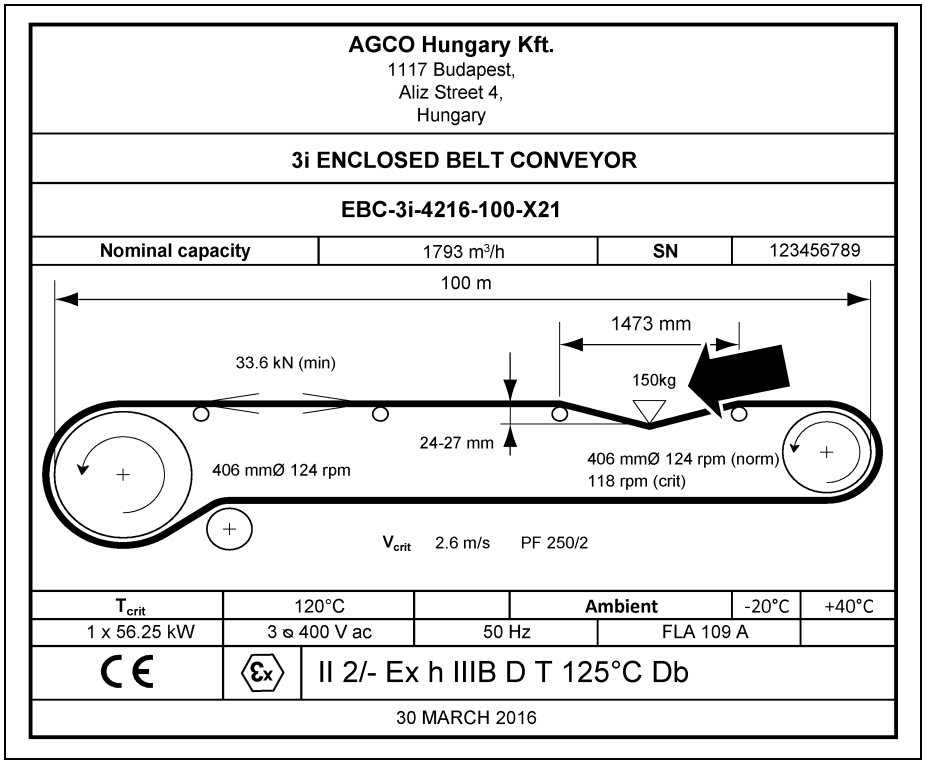

Figure 4W *Rating Plate Showing Required Test Weight*

9. The test weight must be applied across the whole width of the belt

10. With belt slack (no pre-tension), place the supports and weight. The weight must be precisely mid-way between the supports. *(See Figure 4S on Page 33.)*

11. Use a straight edge between the supports and measure the deflection of the belt under the weight. Measure at both edges of the belt and midway across.

12. Adjust the belt take-up mechanism using the same number of turns both side of the conveyor and on each take-up screw. *(See Figure 4R on Page 32.)*

13. Continue until the deflection is within the range given on the rating plate.

14. After the first 1 hour of running under load, the tension should be re-checked and adjusted as necessary.

15. Continue to check the tension daily for the first several days of operation and then weekly until the belt stabilizes and does not need adjustments when checked. The amount of time this process will take varies greatly with the overall belt length and the operating conditions of the conveyor. After this the belt should be checked on regular intervals.

IMPORTANT: *The speed switch at the tail pulley will only notify you when the belt is slack enough to slip, not if the belt needs to be tightened to achieve the proper tension determined using the steps previously listed.*

NOTE: *Improper belt tension will lead to premature failure of the belt conveyor. Under tensioning a belt can result in drive pulley slippage, idler failure, low capacity, material spillage and other serious problems. Over tensioning a belt will lead to premature failure of bearings, shafts, and pulleys. Please follow the above instructions carefully; always install a low speed switch, and tension belt to lowest tension that puts belt deflection in proper range.*

Vulcanized Belt Splices

For some applications, such as when a plow assembly or multiple tripper assemblies are incorporated into a conveyor belt, a vulcanized belt splice is required. This type of splicing joins the two (2) ends of the belt rubber together with the adhesive power of a cement compound without the use of mechanical fasteners. Once the plies of the belt have been glued together, the seam is placed in a portable electric vulcanizing press, which applies even heat and pressure to the joint as the cement compound hardens. A stepped splice like the one shown in *Figure 4X* is a typical application of a vulcanized belt splice.

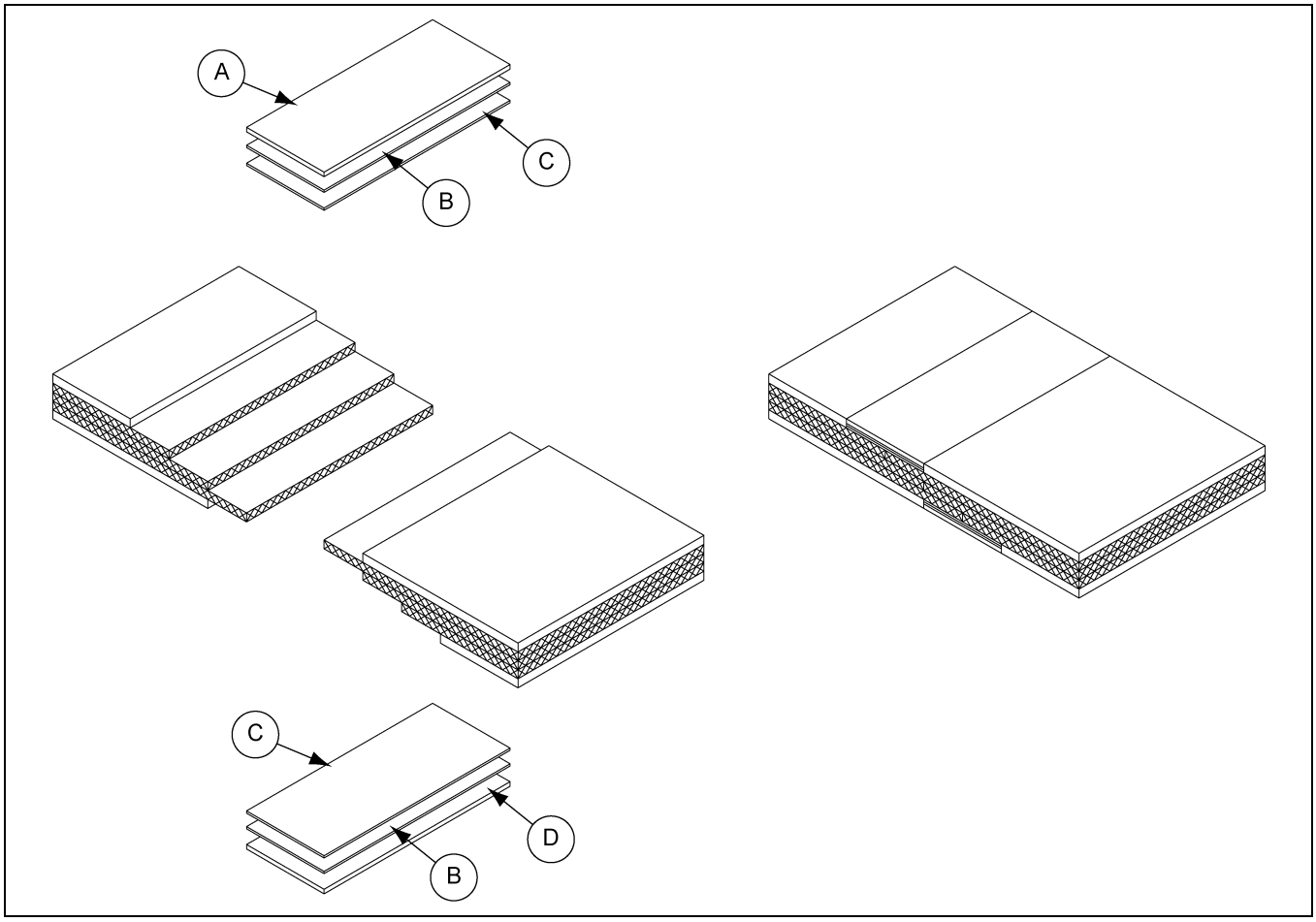

Figure 4X *Stepped Vulcanized Splice*

Ref #	Description
A	Top Cover
B	Reinforcing Fabric
C	Tie Gum
D	Bottom Cover

Vulcanized splices can be used on any conveyor belt assembly, but it is best to wait until the belt has been fully broken in and has been stretched to the proper working tension. The disadvantage of a vulcanized splice is that it is much more costly than the typical mechanical fastener style of belt splicing. However, vulcanized splicing requires less maintenance and lasts much longer than more conventional splicing methods.

Installing the Drive (Shaft Mount Only)

Refer to the certified drawing and the equipment quotation for details of the drive components, if supplied. Drive components furnished can vary from simply providing an extended and keyed head shaft, to a complete drive. For purposes of explanation, the installation of a Dodge Shaft Mount Torque Arm reducer will be discussed. Installation of other reducer brands is very similar, differing only in minor details. Refer to *Figure 4Y on Page 38.* Save and refer to the manufacturer's data supplied with the reducer. The reducer has a hollow output shaft. Tapered bushings in the output shaft seat the reducer on the conveyor head shaft. The input shaft faces away from the conveyor. The reducer should be positioned close to the head shaft bearing while leaving between 38 mm to 62 mm (1.50"-2.44") depending on drive model for clearance to tighten and loosen the screws that draw the tapered bushings tight on the head shaft.

1. Slide the gearbox's hollow shaft onto the conveyors extended shaft with proper clearance on back side of the gearbox and tighten the taper-lock bushings to proper torque settings. *(See Figure 4Y on Page 38.)*
2. Attach the torque arm bracket to the trough bottom directly behind the head. This should put the torque arm (J) into the proper tension state.
3. Attach the torque arm anchor bracket to the reducer housing (G).
4. Rotate the torque arm turnbuckle to nearly full extension for maximum adjustment range.
5. Refer to *Figure 4Y on Page 38.* Assemble the torque arm clevis bracket to the torque arm eye bolt.
6. Fasten the clevis bracket to the torque arm bracket. Use existing holes if possible or drill new holes to fasten the clevis bracket to the torque arm bracket.
7. Adjust the torque arm (J) so that the reducer (G) is vertical. Use the lock nut on the turnbuckle to prevent movement by vibration.
8. Attach the motor mount (B) to the top of the head assembly (A) through the given holes.
9. Fasten the motor (D) to the motor mount (B). The fasteners used will depend on the size and origin of the motor. DO NOT tighten motor mounting screws yet.
10. Fasten the belt guard mounting brackets (H) to the reducer (G), and brackets (E) to the motor mount (B). After installing the brackets (E), attach the mounting bracket guard TA (F) to the brackets (E).
11. Loosely fasten the belt guard WITH THE COVER REMOVED to guard mounting bracket (F). Hole locations for the mounting brackets will need to be found and drilled into the belt guard. Shift the guard so that the elongated hole for the reducer input shaft is vertically aligned and so the full range of adjustment is available. Tighten the guard mounting fasteners.
12. Assemble the drive (M) and driven sheaves (O) on the motor (D) and reducer (G) input shafts. Align the sheave faces and tighten the bushing set screws.
13. Fit the belts (Q) over the sheaves. Use the long screws in the motor bracket to take-up the slack in the belt (Q). Make sure the guard does not rub on either shaft. Then re-install the belt guard cover (R).

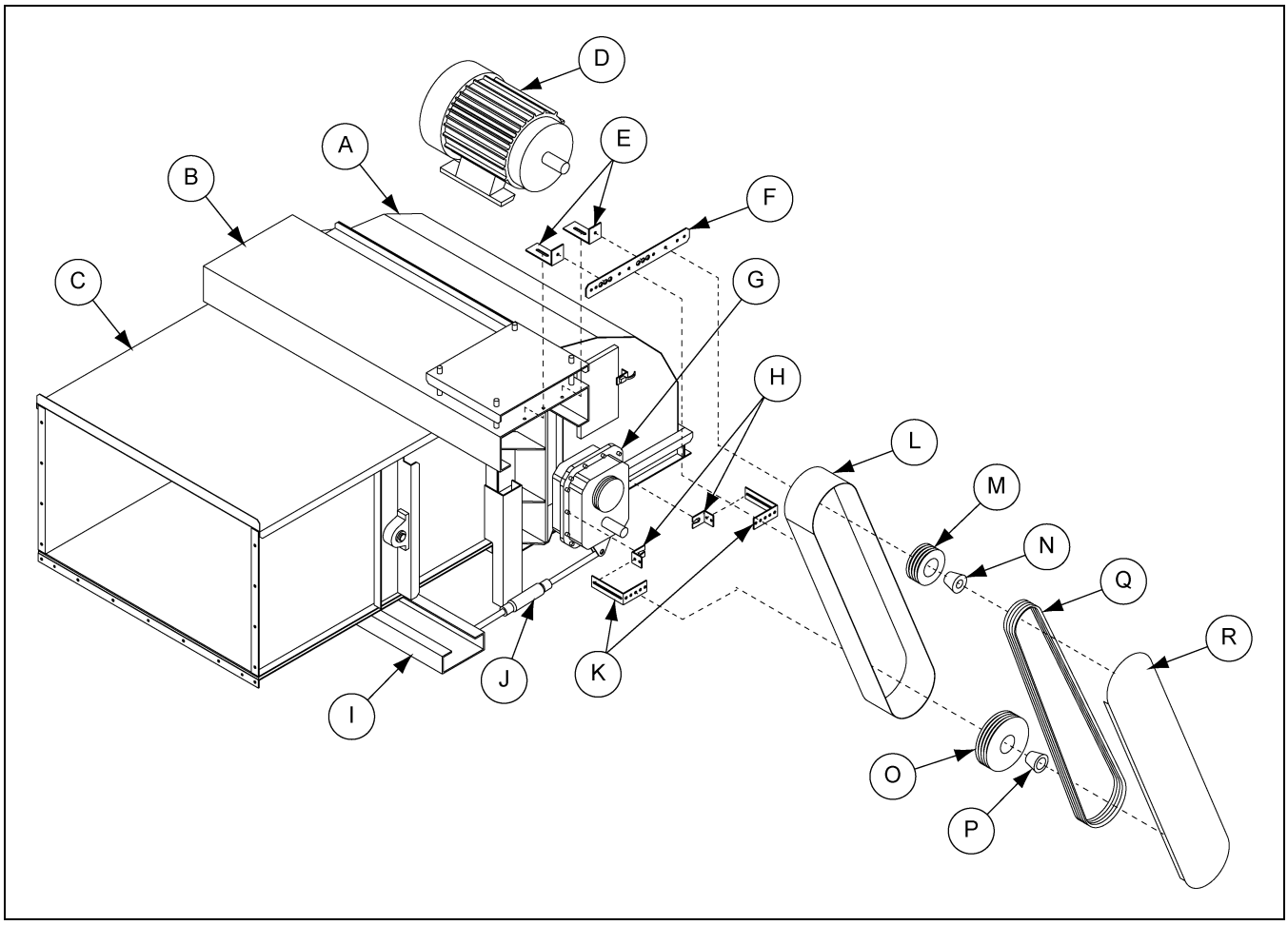

Figure 4Y *Typical Shaft Mount Drive Installation*

Ref #	Description
A	Head Section
B	Motor Mount
C	Intermediate Section
D	Motor
E	Mounting Bracket (Motor Mount/Guard TA)
F	Mounting Bracket Guard TA
G	Reducer
H	Mounting Bracket Belt Guard (Reducer Side)
I	Torque Channel

Ref #	Description
J	Torque Arm
K	Mounting Bracket Belt Guard (Guard Side)
L	Drive Belt Guard
M	Drive Sheave
N	Drive Bushing
O	Driven Sheave
P	Driven Bushing
Q	V-Belt
R	Drive Belt Guard Lid

Right Angle Reducer Drive Installation

In some cases, where there is not space on top of the head for the motor and motor mount assembly, a right angle reducer can be used. A right angle reducer (E) and motor (D) are shown in *Figure 4Z*. When a right angle reducer is used, there is also no need for a belt drive package because the motor output is in a direct line with the reducer input. To install a right angle reducer drive, the reducer (E) is mounted onto the head shaft.

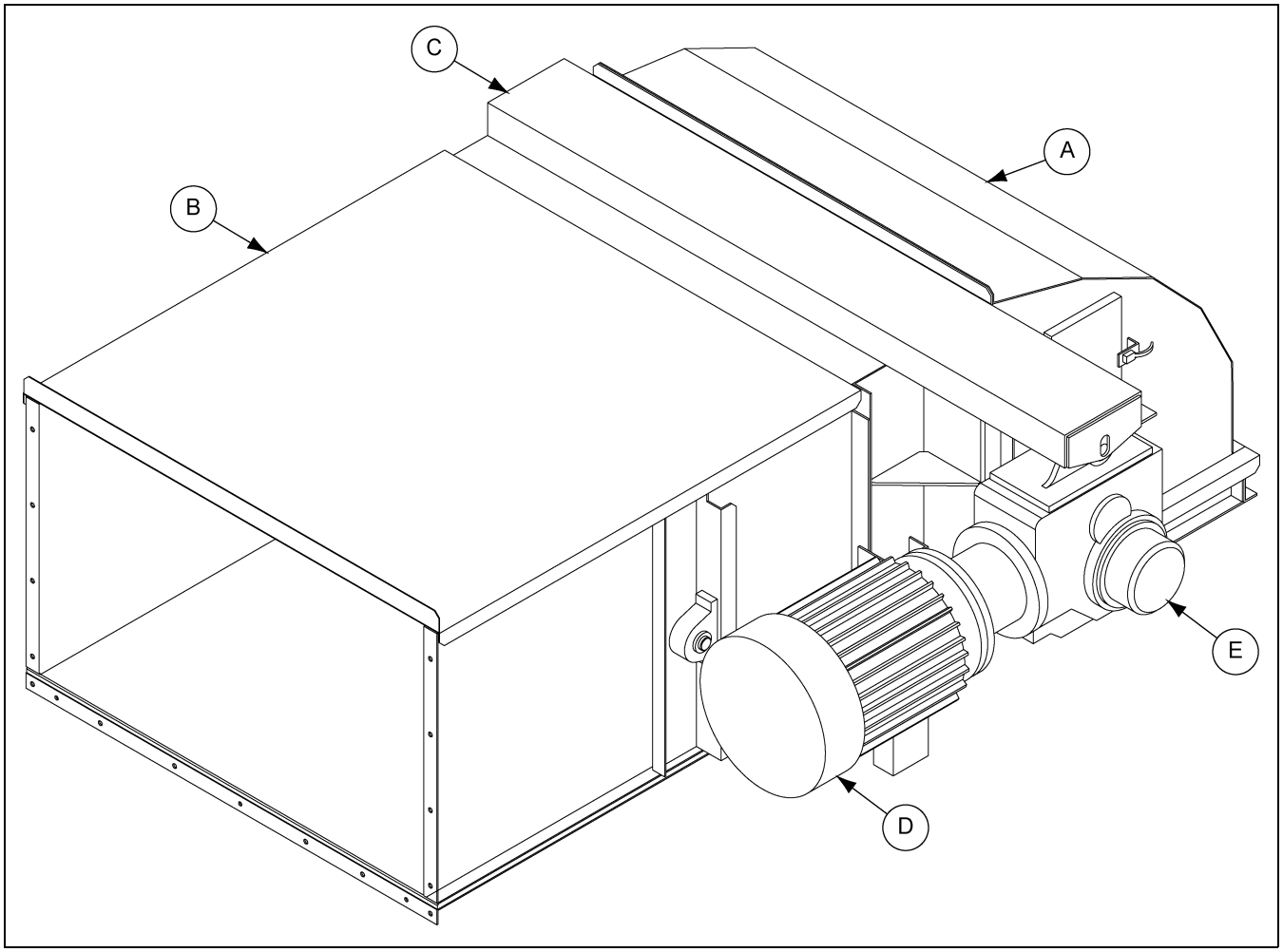

Figure 4Z *Right Angle Reducer Drive*

Ref #	Description
A	Head Section
B	Intermediate Section
C	Torque Channel
D	Motor
E	Reducer

Plow Installation

Movable discharge plows are an additional feature that allows for the discharge position to be at almost any point along the conveyor. The plow sits on top of interconnected sections that have rails running along the top of the sections that help support and guide the plow as it traverses the conveyor. *(See Figure 4AA.)* Two (2) P/A sections are sent that will make the transition from a standard conveyor section to a plow section all-in-one. Installation procedures will again follow the conveyor assembly instructions *on Page 25*.

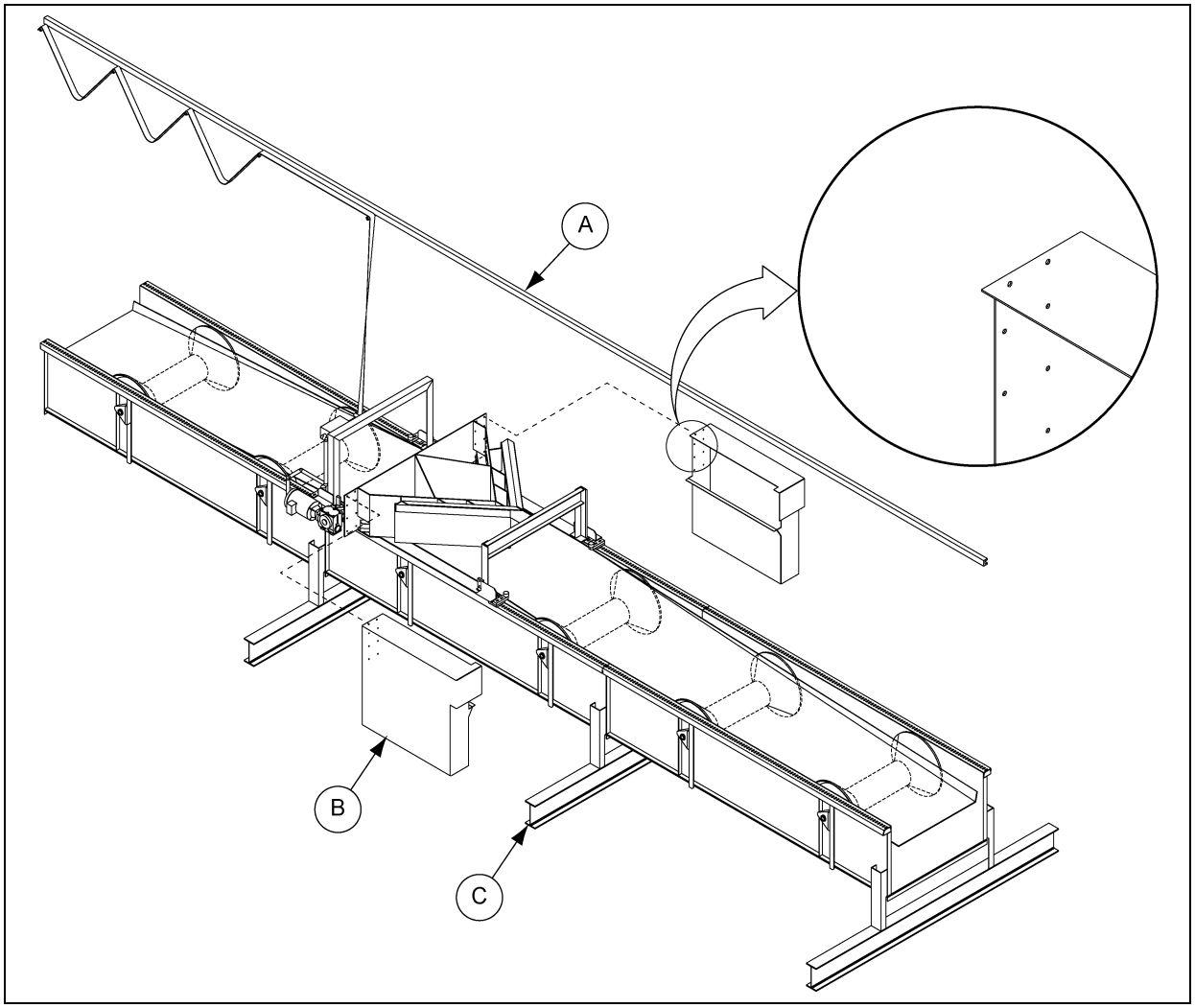

Figure 4AA *Plow Section Assembly*

Ref #	Description
A	Wiring Festoon
B	Discharge Chute
C	Conveyor to be Supported Every 2.9 m (9'-8")

A wiring festoon (A) is necessary to supply power to the motor found on the plow assembly. The festoon is to be supplied by others, but the wiring support provided at the rear of the plow makes for an ideal location to mount and secure conduit for the electric motor.

Two (2) discharge chutes (B) will be shipped separately from the plow assembly. They are easily attached to the plow upon shipment once the liner bolts shown in detail view of *Figure 4AA* have been removed. After those holes have been lined up with the rear of the plow simply re-attach the bolts through the liner, discharge chute, and the plow assembly to complete installation.

Two (2) limit switches will need to be installed at the beginning and end of the travelable plow sections (E). *Figure 4AB* demonstrates how the limit switch and supplied mounting bracket need to be field located and attached to the side of the conveyor. Typical mounting locations include either the side panel or the bearing bracket.

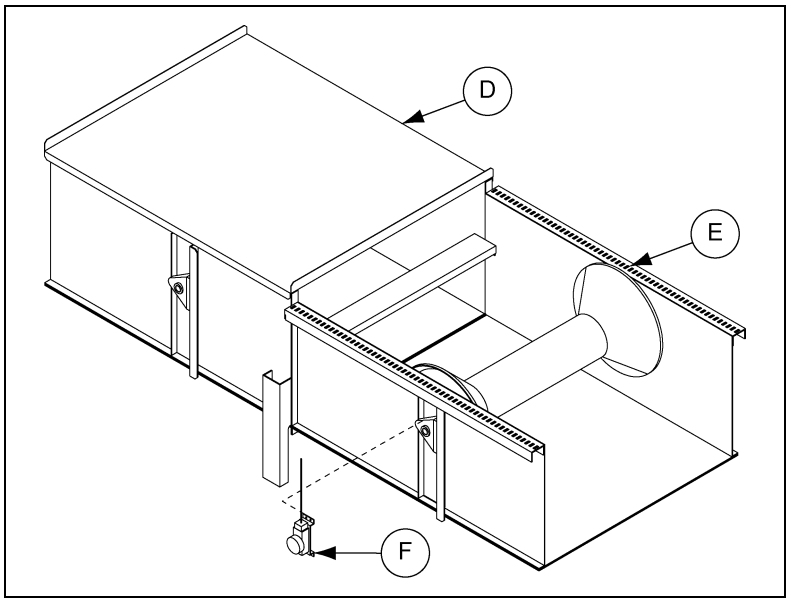

Figure 4AB *Limit Switch Location*

Ref #	Description
D	P/A Section
E	Plow Section
F	End of Travel Limit Switch and Mounting Bracket

GSI movable discharge plow also features a bristle brush to help sweep the belt clean as it passes through the plow assembly. *Figure 4AC* shows where the brush is located and highlights a few of the incorporated slots to adjust the height of the bristles to increase or decrease the amount of contact with the belt.

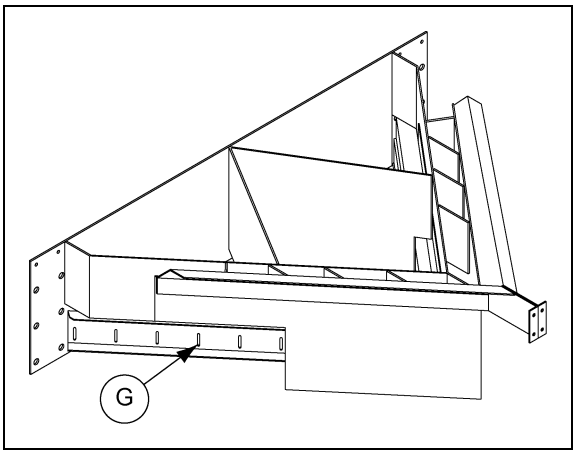

Figure 4AC *Brush Adjustments*

Ref #	Description
G	Slots for Brush Height Adjustment

Tripper Installation

Another form of intermediate discharge GSI offers is a tripper. The tripper is designed to allow for material offload at a given point along the conveyor. *Figure 4AD* shows the material profile and belt layout for a conveyor with two (2) trippers. In this example, the first tripper is set so the material bypasses the first intermediate discharge location. The material then exits the belt at the second intermediate discharge location. If desired, the second tripper setup could be set to the flow-thru mode as the first tripper is, and the material would then travel all the way to the end of the conveyor, discharging at the head.

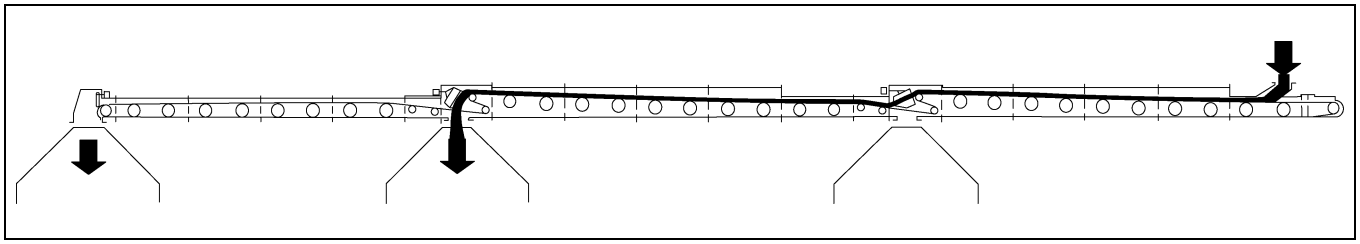

Figure 4AD *Tripper Layout*

Each tripper consists of a total of seven (7) sections strategically placed in the middle of a conveyor. Installation procedures are the exact same as conveyor assembly *on Page 25*. *Figure 4AE* shows the layout of the sections. The special short section before the tripper helps to ensure proper spacing of the tripper and the intermediate discharge. The next four (4) sections are the “A” through “D” sections of the tripper knee. When assembled in order, the knee sections change the height of the belt, raising it as it approaches the actual tripper section which follows directly behind. 1.2 m and 1.3 m (48" and 54") wide conveyor assemblies also include an “E” knee section which pushes the total number of sections to 8 for those sizes. Similar to the smaller conveyor widths the “E” section will follow directly behind the “D” section and just ahead of the tripper section.

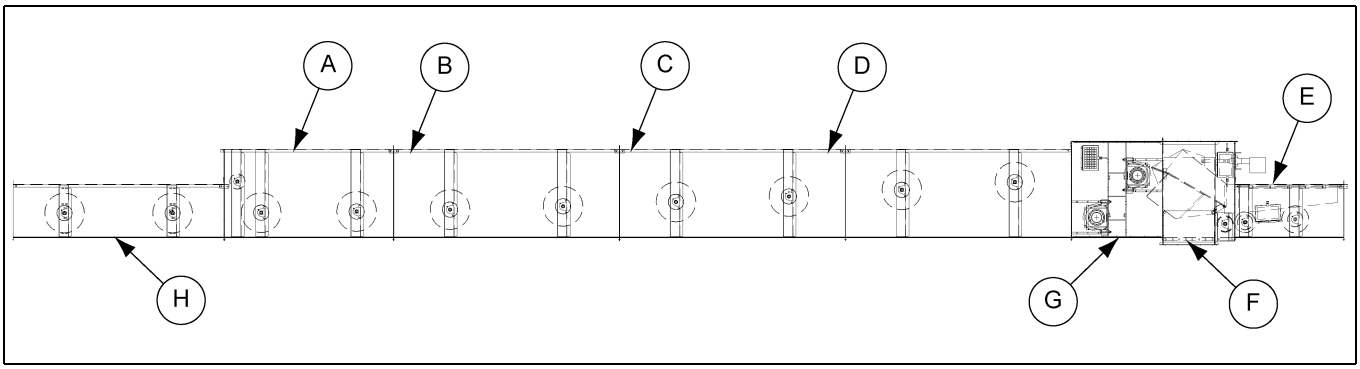

Figure 4AE *Tripper Assembly*

Ref #	Description
A	“A” Knee Section
B	“B” Knee Section
C	“C” Knee Section
D	“D” Knee Section

Ref #	Description
E	Knee Forward Section
F	Tripper Discharge
G	Tripper Knee Section
H	Custom Length Short Section

The tripper has two (2) functions. It can be used for its primary purpose of offloading the material at the intermediate discharge location. When the material is offloaded at the intermediate discharge point, the tripper acts similarly to a plow, pushing the material to both sides of the conveyor. The material then falls through two (2) discharge chutes, one on each side of the conveyor as shown in *Figure 4AF* and *Figure 4AG*.

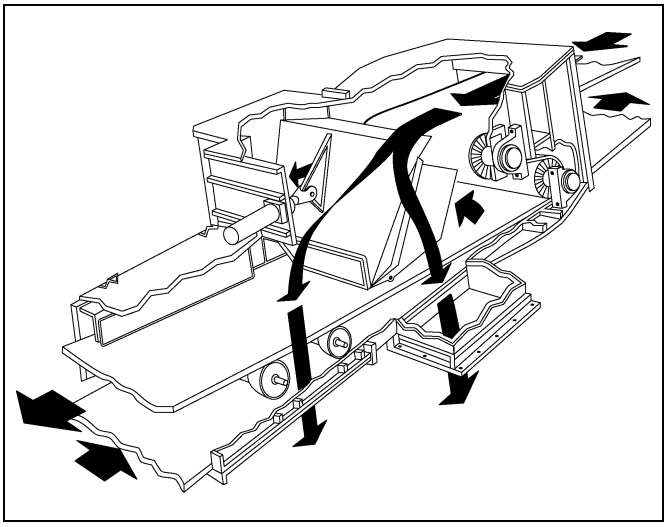

Figure 4AF *Tripper in Divert Position*

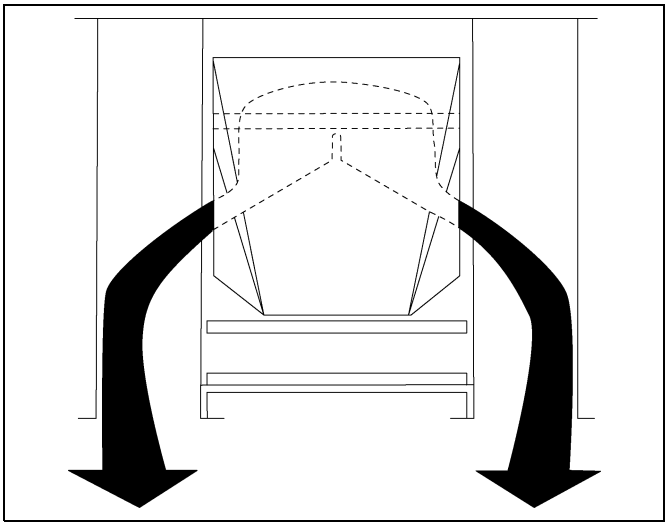

Figure 4AG *Tripper Side Discharge*

The tripper can be set to flow-thru position to bypass the intermediate discharge location. In this mode, the internal weldment funnels the conveyed material back onto the belt at the forward knee section, as opposed to diverting it outward to the side of the section housing into the discharge chutes. The forward knee section then brings the belt back up to standard operation height in addition to transitioning the belt back to standard trough shape. The material is then conveyed in typical fashion through the remaining sections to either an additional intermediate discharge or the head pulley discharge. *Figure 4AH* shows the tripper when used in the flow-thru mode.

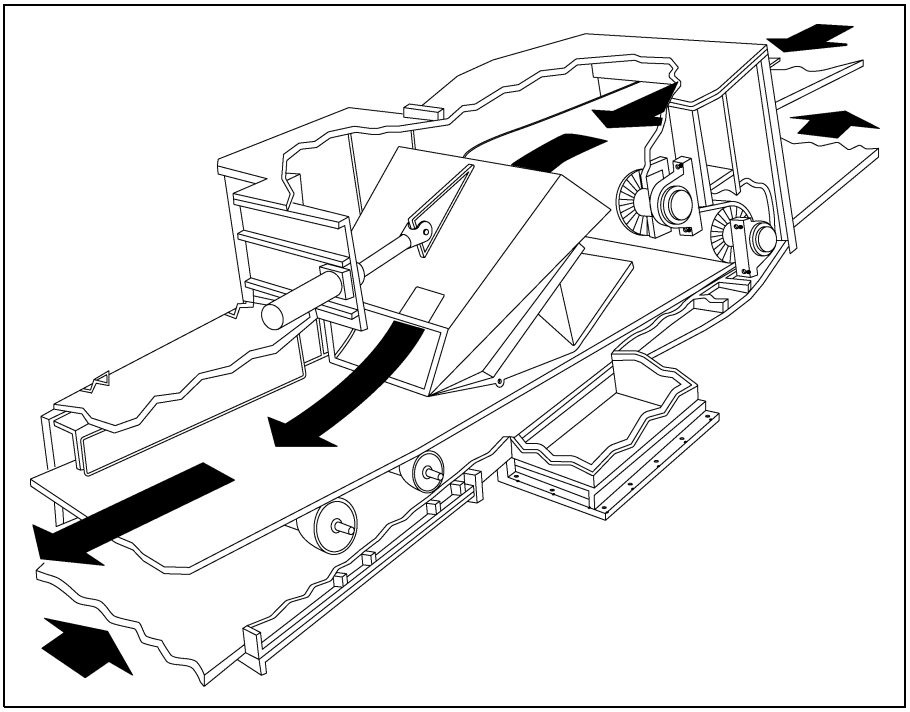

Figure 4AH *Tripper in Flow-Thru Position*

Shrouded heads ensure that any material that has not exited the conveyor at one of the previous discharge locations is carried back to the tail along the bottom of the conveyor. Once that remaining material has reached the tail pulley, it will be flipped back onto the belt for a return trip to the desired discharge location. The shroud can also be retracted by a linear actuator if the end of the conveyor is the discharge location of choice. *Figure 4AI* and *Figure 4AJ* depicts the head section and demonstrates how the shroud can be used in both examples listed.

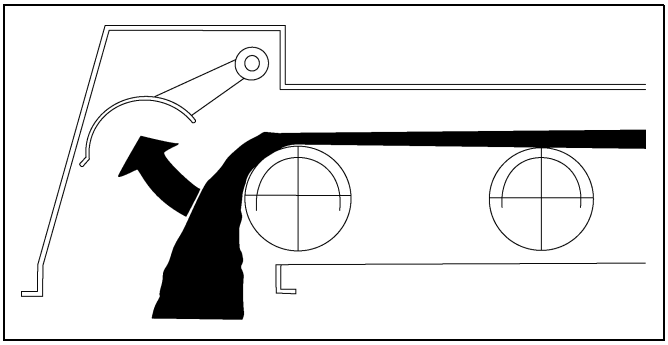

Figure 4AI *Open Discharge*

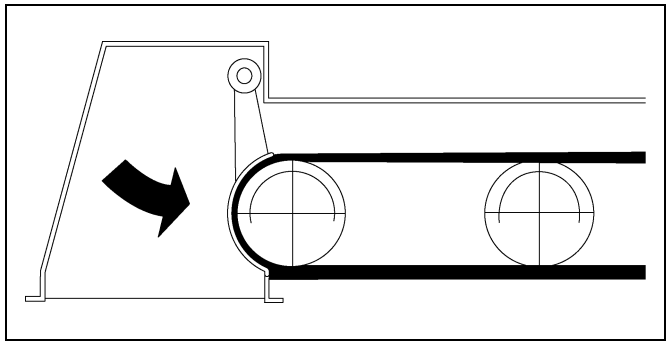

Figure 4AJ *Closed/Carry Over Control*

The section directly behind the discharge section of a conveyor that uses a tripper is the forward knee section (I). *(See Figure 4AK.)* This section includes skirting to help contain and direct the flow of material back onto the belt should the tripper discharge be bypassed. There is an inspection door on each side of the section that allows for an operator to check the height of the rubber skirting with respect to the idlers and the belt. Slots in the side panels allow for the mounting brackets to be raised and lowered as needed to ensure the rubber skirting is barely touching the belt rubber as it passes underneath as shown in *Figure 4AK*. By loosening the retainer on the back of the rubber skirting, the rubber can be slid down prior to the retainer being retightened to help adjust the height of the skirting as needed.

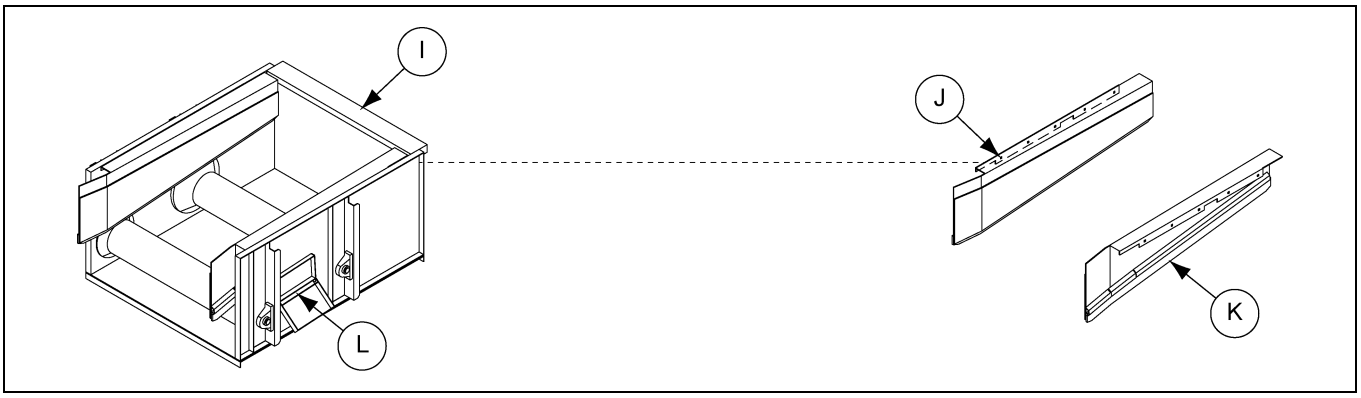

Figure 4AK *Forward Knee Skirting Adjustments*

Ref #	Description
I	Forward Knee Section
J	Mounting Holes
K	Rubber skirt height can also be adjusted.
L	Skirting height can be checked through inspection door.

Refer to electrical safety *on Page 17* above for minimum requirements of electrical installation.

ATEX Statement

To minimise the risk of ignition of dust inside the enclosed conveyor, GSI recommends the use of a suitable designed controls system as detailed below. The installer may select for alternative control methods such as extraction of dust through a mechanical ventilation/extraction system. In this case, the system shall be designed in accordance with the following guidelines:

1. Extraction and air make-up rates shall be calculated based on the maximum handling rate of the conveyor so that the maximum dust/air concentration for grain dust does not exceed 50% of the lower explosion limit (LEL).
2. The extraction system shall be interlocked to the conveyor motor so that the conveyor cannot operate unless the extraction system is running and the airflow at the points of extraction is proven.
3. Proving the airflow shall include a calibrated/certified method of volumetric air flow measurement interlocked to a safety control system of minimum performance level shall be (PL(d)) in accordance with EN13849.
4. In the event that the airflow falls below that calculated in *Step 1*, the conveyor shall be brought to a safe stop.
5. Extraction ducting should be designed to ensure the dust particles cannot settle out, but remain entrained in the air throughout and to the filter and extraction system.
6. Extraction connections should be made at the locations of highest dust creation, eg: inlets, outlets and transitions.
7. Make-up air vents shall be inserted at points furthest away from extraction connections to ensure airflow throughout the conveyor.
8. The designer/installer takes full responsibility for:
    a. Design, installation and operation of the system.
    b. Subsequent CE marking, including ATEX ratings for the completed conveyor and extraction system installation.

Safety Interlocks

The conveyor shall be controlled via a safety control circuit, in accordance with EN13849. The minimum performance level shall be PL(d) and IPL2 in accordance with EN ISO 80079-37:2016.

Required safety interlocks shall be:

Emergency Stop Push Button(s)

These shall be installed at the main control centre and in other locations, in accordance with risk assessment for the whole installation. Pressing the emergency stop will bring the conveyor, and all other equipment to an immediate stop.

Slack Belt/Belt Slip Monitoring

1. Belt slip shall be detected by monitoring the speed of the non-driven return pulley, in accordance with the normal and critical speeds given on the rating plate. Where the speed drops below the critical speed conveyor shall be brought to a safe stop. *(See Figure 5A.)*

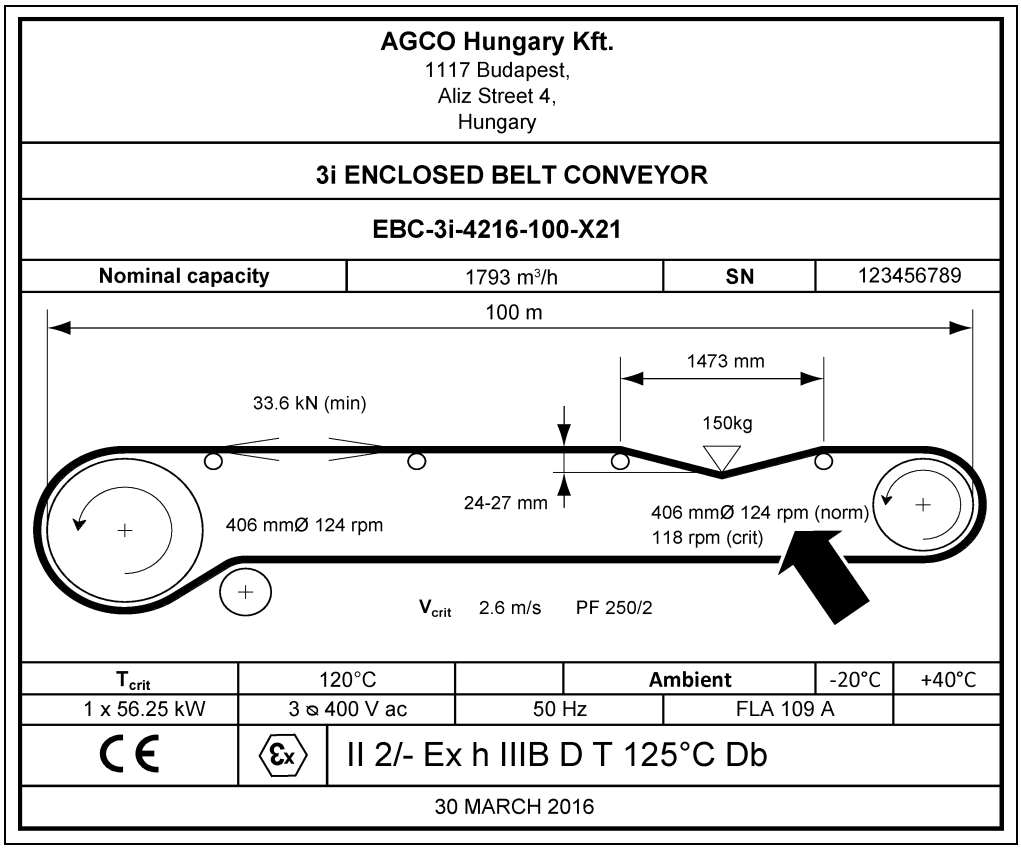

Figure 5A *Rating Plate Showing Return Pulley Speeds*

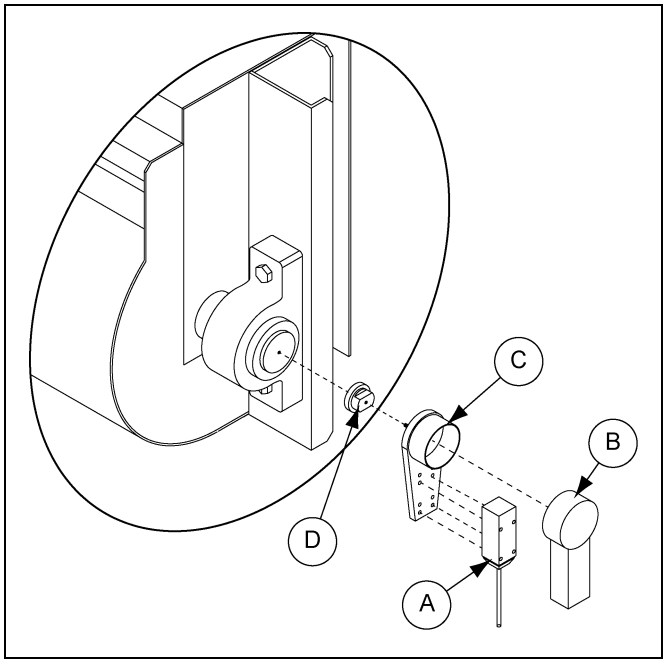

Ref #	Description
A	M800 Speed Switch
B	Speed Switch Cover
C	Whirligig Mounting Bracket
D	Optional Magnet

Figure 5B *Shaft Speed Switch Location*

Conveyor Blockage Monitoring

The “plug switch” assembly shall be fitted to all conveyors and shall bring the conveyor to a complete stop in the event of the blockage being detected.

Bearing Temperature Monitoring

Critical bearing temperatures shall be monitored and connected to a control system which warns of temperature overheat and can bring the conveyor to a safe stop. **NOTE:** *This applies only to grain dust. (Refer to ATEX declaration detail on Page 2 and 3.)*

Critical bearings are those carrying the maximum load, including:

1. Head pulley bearings
2. Tail pulley bearings
3. Snub pulley bearings (if fitted)

Non-critical bearings shall undergo regular manual monitoring. (Refer to maintenance section *on Page 56*.) Non-critical bearings are all those which are not included for continuous temperature monitoring.

1. Maximum permissible temperature (T_{crit}) is give on the rating plate and typically will be 120°C. Temperature monitoring will detect any temperature exceeding this and bring the conveyor to a safe stop. *(See Figure 5C.)*

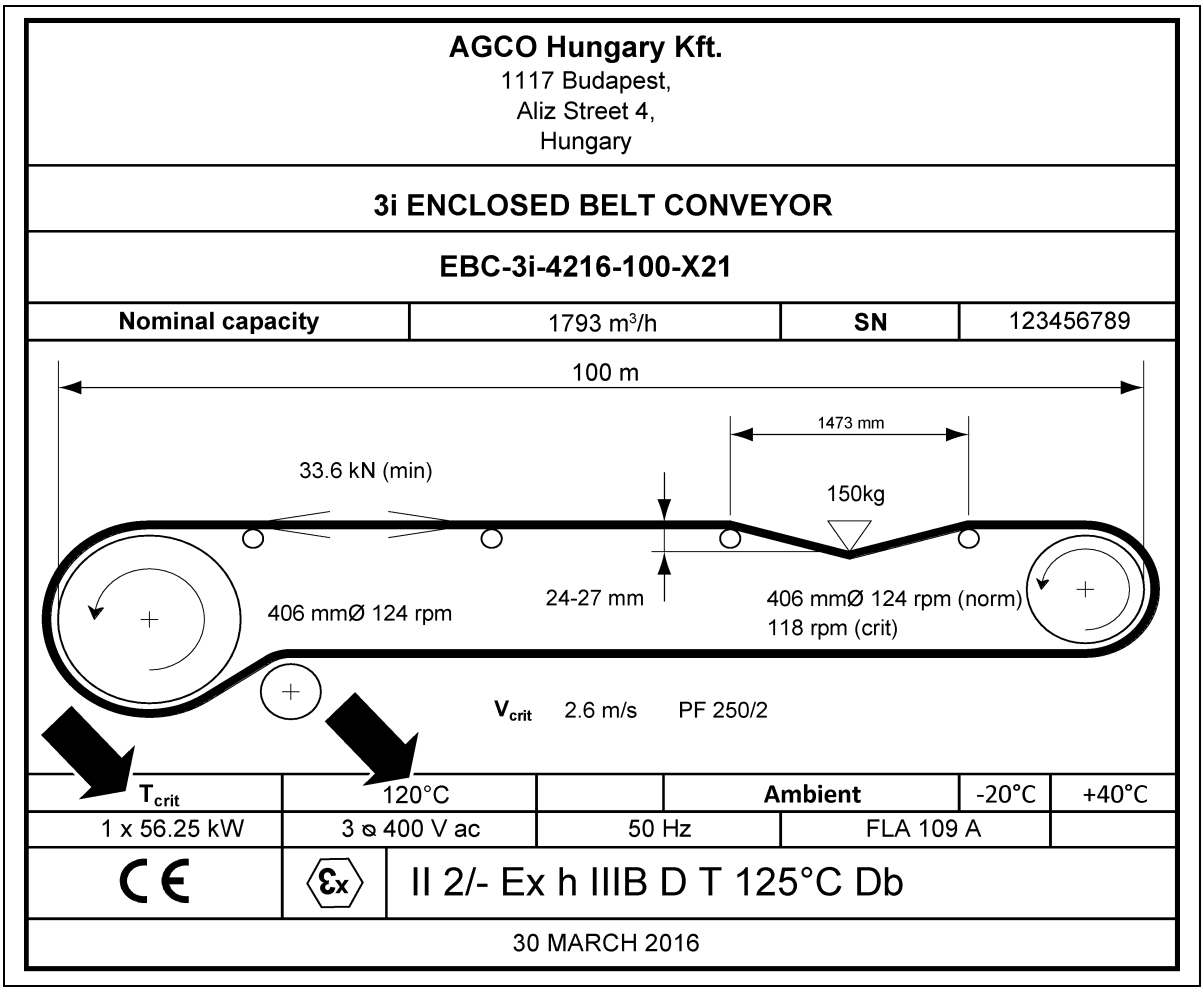

Figure 5C *Rating Plate Showing Bearing and Conveyor Critical Temperature*

Belt Alignment sensing

1. Sensors shall detect any abnormal tracking of the conveyor belt, and bring the conveyor to a safe stop before a hazardous situation can occur. ‘Rub-blocks’ are located at the tail/take-up section *(See Figure 5D)*, and in the short section immediately following the head/drive section. *(See Figure 5E.)*

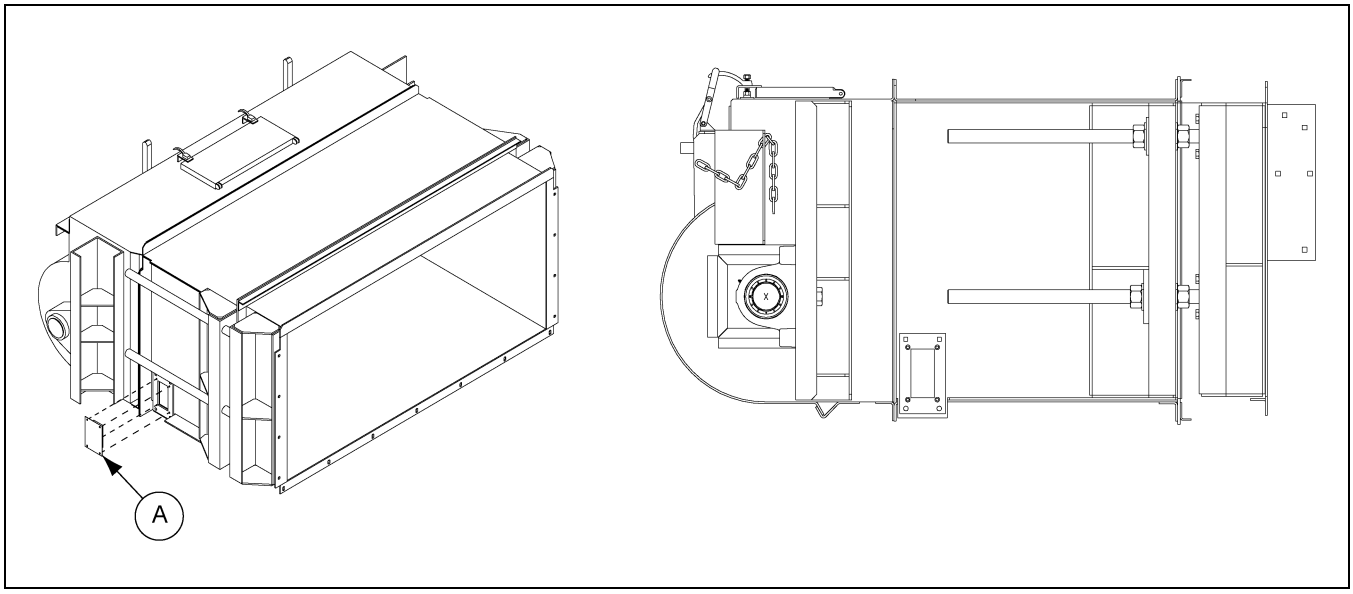

Figure 5D *Rub-Block in Tail/Take-Up Section*

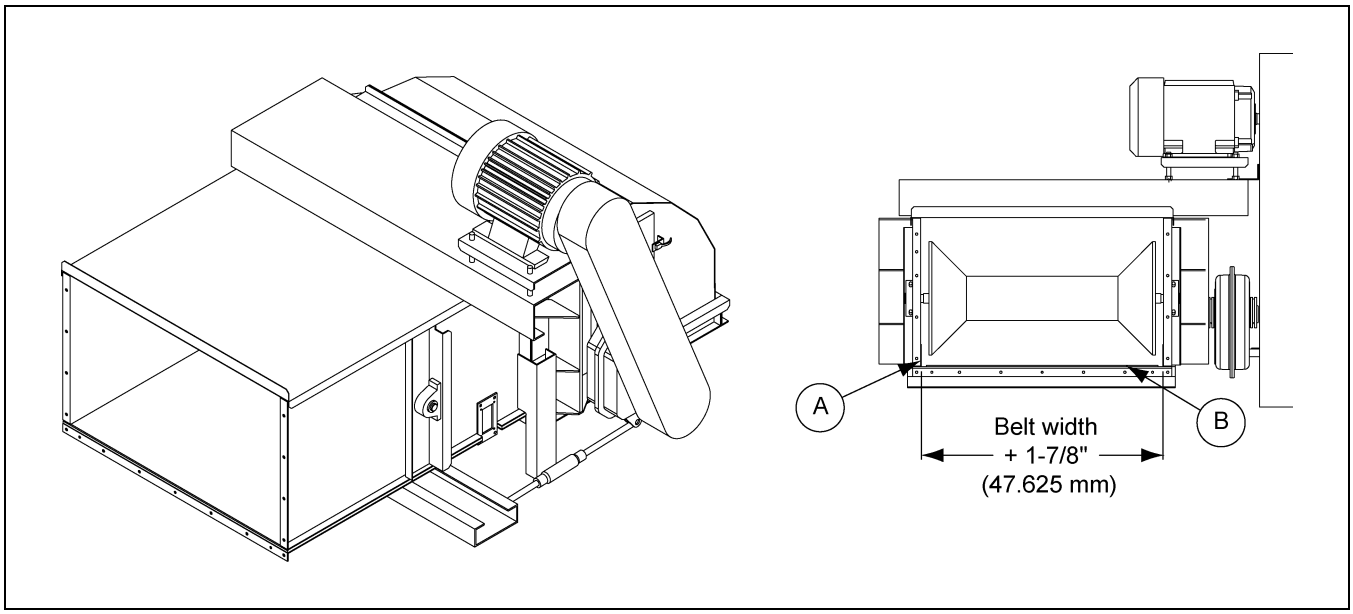

Figure 5E *Rub-Block in Short Section*

Ref #	Description
A	Rub Block
B	Belt

Motor Over Current Protection

Refer to motor rating plate for correct setting.

Motor Over-Temperature Protection

In the event the motor exceeds it’s maximum temperature, the conveyor shall be brought to a safe stop.

Re-Start Following Safety Shut Down/Emergency Stop

Re-setting and of the safety interlocks or the emergency stop shall not permit immediate re-start without re-set of the safety circuits and re-start at the conveyor start control.

Pre-Startup Procedure

Do this before power is applied to the conveyor:

1. Make sure all guards are in place and all warning labels are in place and legible. GENERAL SAFETY INFORMATION, explains the purpose and intended location of the warning signs. Safety Section also lists the part numbers of the signs. Warning signs are an important part of any safety program; replace any missing signs IMMEDIATELY.
2. Make certain all electrical connection box covers are in place and securely fastened. Check for exposed wiring and damaged conduit.
3. Inspect the inside of the conveyor for tools, or anything else that could cause damage on startup.

DANGER ***All power to the conveyor must be shut off and locked out before performing any pre-startup procedure. Death or serious injury can result if the conveyor starts while any service is being performed.***

Initial Lubrication

Filling the Reducer with Lubricant

The conveyor's drive reducer is shipped without lubricant (dry). Refer to the documentation furnished with the optional reducer, fill the reducer gearcase with the recommended lubricant to the specified level. All lubricants to be supplied by others.

Mounted Bearings

The mounted bearings in the head, tail, and intermediate sections were filled with lubricant from the manufacturer and do not require relubrication at initial start-up time.

Head Shaft Alignment

Verify that the head shaft is truly perpendicular to the conveyor axis and that the pulley is centered on the shaft. A misaligned shaft or incorrectly positioned pulley may cause premature belt failure.

Conveyor Start-Up

Pre-Start Requirements

1. All electrical power must be locked off.
2. All guards and inspection doors are in place and secure.
3. Gear reducer is filled to the required level with lubricant.
4. Motor overload relay is set at the correct amperage.
5. Adjust loader skirt to just above the belt. *(See Figure 6A and 6B on Page 51.)*
6. Adjust plow height to between 12 mm and 16 mm above belt. *(See Figure 6C on Page 51.)*
7. Belt is correctly tensioned. (Refer to belt tensioning *on Page 32*.)

8. All electrical enclosures are closed.
9. At least 4 people are available (1 to start/stop conveyor, 2 to listen/watch for correct operation, 1 to man the emergency stop).
10. Conveyor is empty.
11. All safety decals are in place and rating plate is fitted. (Refer to safety decals *on Page 21*.)
12. Personnel have and use required personal protective equipment. (Refer to safety first *on Page 9*.)

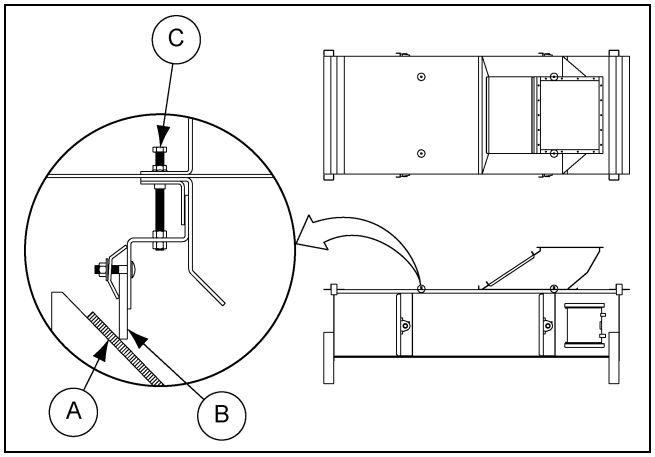

Figure 6A *Roller Flo Loader Skirt Adjustment*

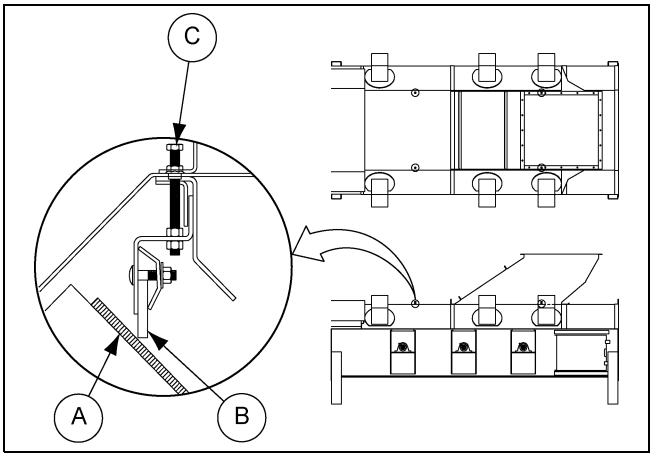

Figure 6B *3i Roller Flo Loader Skirt Adjustment*

Ref #	Description
A	Belt
B	Skirt

Ref #	Description
C	Adjustment Screw

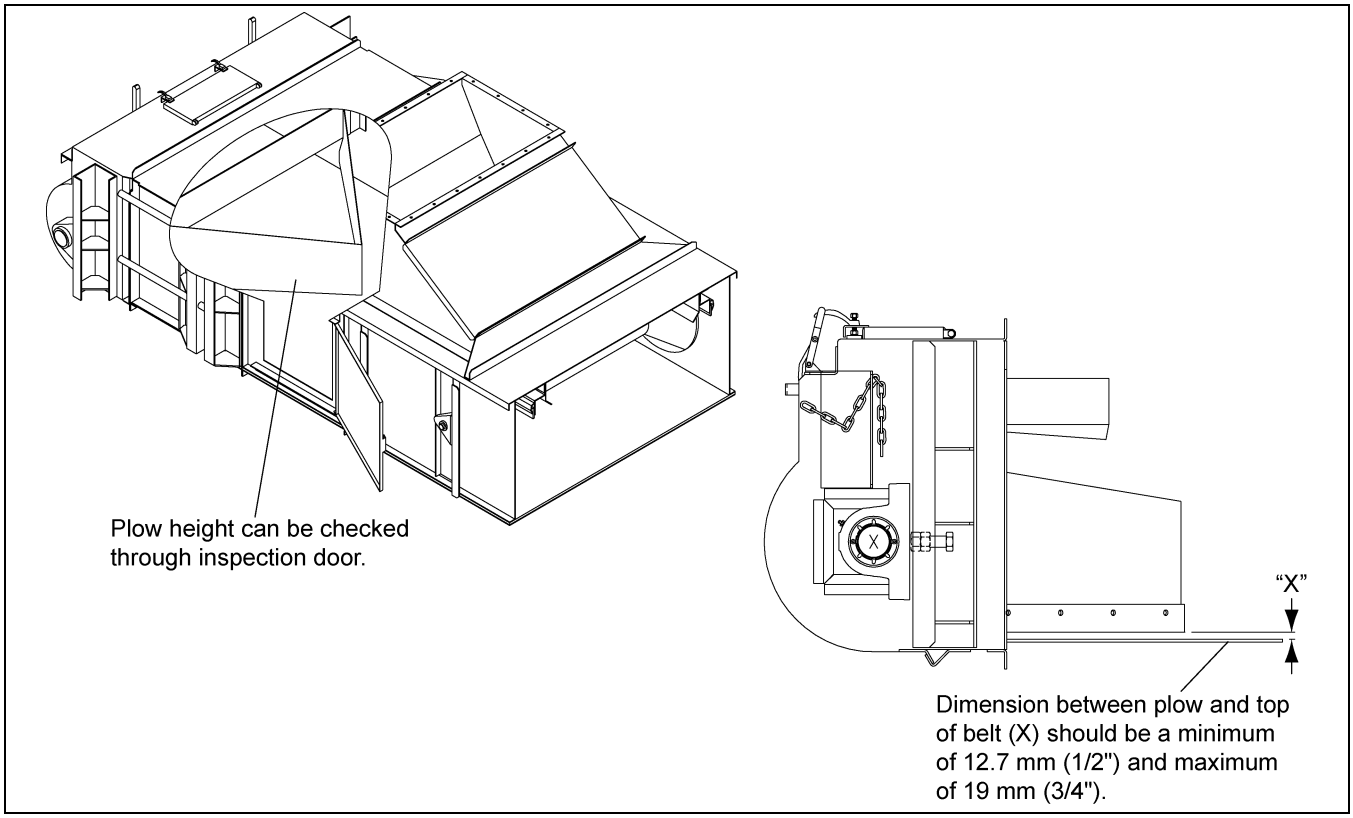

Figure 6C *Tail Plow Height Adjustment*

Initial Start-Up Precautions and Checks

The procedures to be carried out below will require operation of the conveyor at times with guards and covers removed.

1. Extreme care shall be taken to avoid injury.
2. Observe the conveyor from a safe distance.
3. Never attempt to make adjustments on the conveyor unless it is OFF and locked out.
4. Keep all long hair tied up and away.
5. Do not wear loose clothing.

Start-Up Procedure Checklist

Ref #	Procedure	Pass/Fail/NA
1	Briefly start the conveyor	
	a. Listen for abnormal noises	
	b. Observe for excessive vibration	
2	Stop the conveyor and lock out power	
	a. Open the head and tail section inspection covers.	
3	Briefly start the conveyor	
	a. Check for correct belt direction	
	b. To reverse, lock out power and swap any 2 phases on the motor line connections	
4	Re-start the conveyor	
	a. Check for signs of off centre belt tracking	
5	To rectify tracking issues, lock out the power then	
	a. Adjust the head and tail pulley alignment	
	i. Head pulley may be shimmed to re-align	
	ii. Tail pulley can be adjusted at the take-up screws	
	b. Refer to Belt Tracking below for localized tracking issues	
6	Re-check alignment until belt tracks centrally	
7	Stop, then re-start the conveyor	
	a. Check for any signs of belt slipping at belt start-up.	
	b. Re-tension belt if required	
8	Check belt is running correctly over all idlers. Note, not all idlers will rotate with an unloaded belt.	

Ref #	Procedure	Pass/Fail/NA
9	Calibrate the tail pulley speed sensor in accordance with manufacturer's guidelines.	
10	Shut off conveyor and lock out	
	a. Check operation of plug switch	
	b. Check operation of alignment sensors/switch	
	c. Check operation of motor overload relay	
	d. Check operation of other interlocks (if fitted)	
	e. Replace all covers and close all inspection doors	
11	Re-start conveyor	
	a. Check operation of all emergency stops	
12	Gradually load conveyor with grain	
	a. Check grain is loading centrally on the belt.	
	i. Install baffles into the grain before it enters the loader to rectify off-center loading.	
	b. Check for signs of belt slipping when belt is fully loaded	
	c. Check motor amperage is below FLA given on the motor and conveyor rating plate.	
	d. Allow the conveyor to run for at least one hour	
	e. Make a note of the ambient temperature	
	f. Measure all bearing temperatures using an infra-red thermometer	
	g. Use a copy of your certified drawing and make a note of each bearing temperature. This will serve for future reference.	
	h. Any bearing running significantly higher temperature than any other similar bearing may indicate loss of lubrication or bearing failure.	
	i. Re-lubricate the bearing or replace	

Belt Tracking

If the belt is tracking to one side in one location, adjust the idler at that section. Adjust the side of the idler that the belt is riding high on toward the direction of travel until the belt becomes center. *(See Figure 6D and Figure 6E.)* If the belt is rubbing the side of the conveyor on the return path, check to see if that section is squared and level with the two sections before and after. If one or more portions of the belt run off at all points along the conveyor, the cause is more likely in the belt itself, in the joints of the belt, or in the loading of the belt. See loading material on the belt *on Page 55* for belt loading corrections. If the belt runs off center at or near the splice then returns to center, the splice is not correct. Re-splice the belt according to the direction stated in this manual. If the belt runs off center away from the splice and then returns to center, check that area of belt for cuts, burns, or other localized damage.

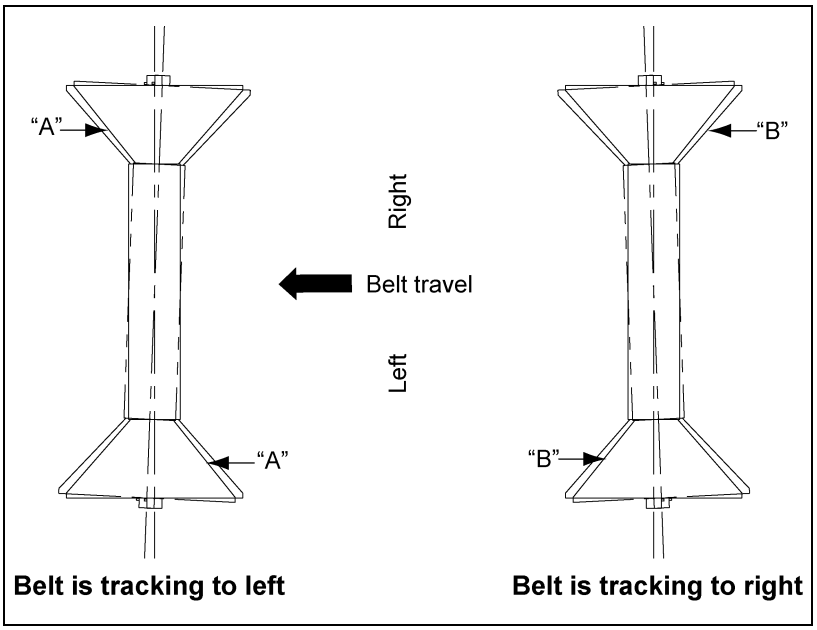

Figure 6D *Standared Roller Flo Idler Adjustments*

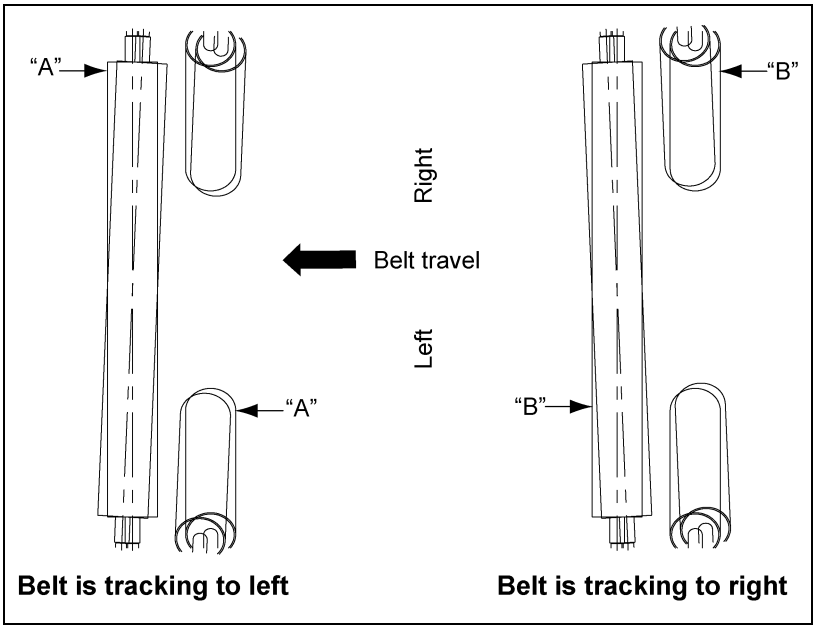

Figure 6E *3i Roller Flo Idler Adjustments*

Loading Material on the Belt

Start with a light load and gradually work up to the load that the conveyor was designed to handle. Check skirting to see that the material is being directed onto the **CENTER OF THE BELT**. Off-center loading is harmful to the belt, idlers, and shafting. An off-center load will affect belt alignment in that the belt will run off center. *(See Figure 6F.)* A central load will maintain belt alignment. **If the material is not loading center on the belt, install baffles in the chute from the feeding equipment BEFORE it gets to the belt loader in order to center the material**.

The loading point of a belt conveyor is the critical point. Here, the conveyor receives its major abrasion and practically all of its impact. The ideal condition is to have the material pass from chute to belt at the same speed and direction of travel as the belt, with a minimum amount of impact, and to load the belt on center. If the material is not delivered onto the belt at the belt speed, there will be turbulence in the mass of the material at the loading point. A build-up in volume may form at this point. This material turbulence is a function of the velocity difference between the belt and the material.

The skirts must be adjusted to prevent side spillage of material and to keep the load central on the belt. The maximum distance between skirtboards customarily is two thirds the width of a troughed belt. The skirt length is designed to stop side spillage. The material should also be at rest on the belt before it reaches the end of the skirt. If the material is still tumbling as it passes the skirt end, the skirts may need to be lengthened.

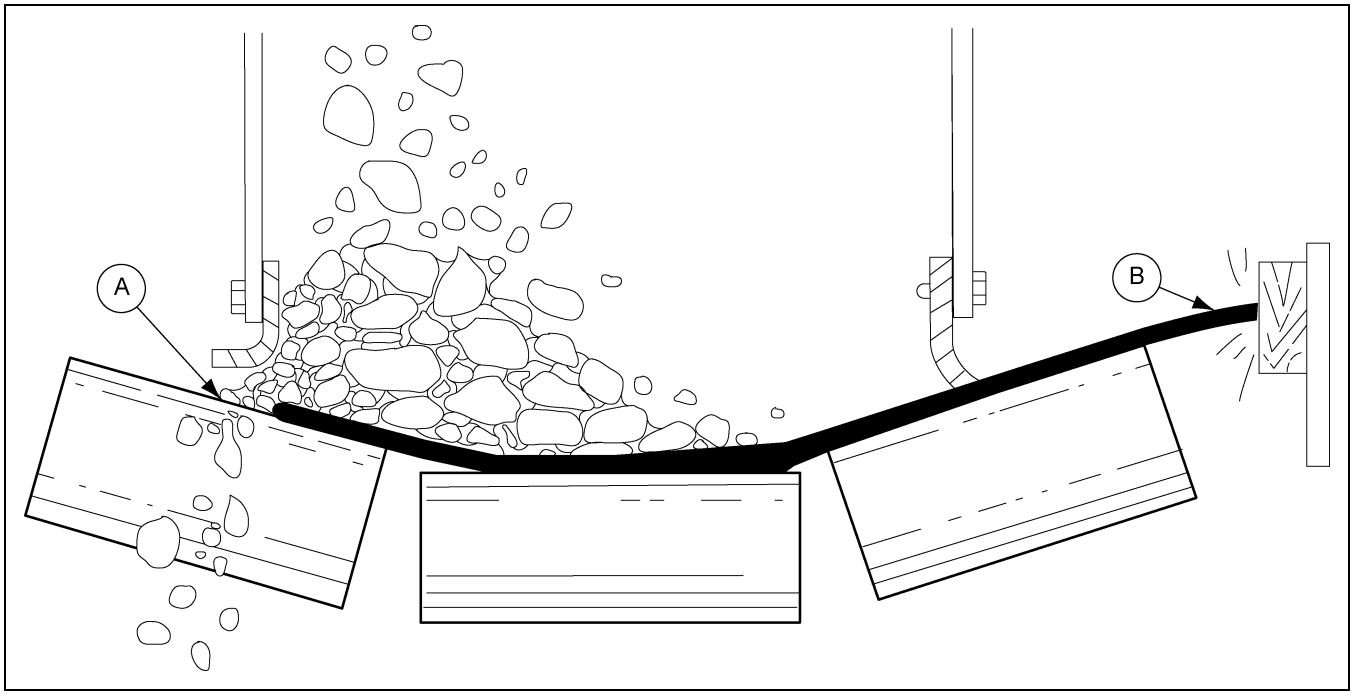

Figure 6F *Effects of Off Center Loading*

Ref #	Description
A	Spill
B	Edge Rub

DANGER

Before any maintenance is performed on the conveyor, power must be shut OFF and locked out to prevent accidental start-up.
Failure to observe all safety rules, written, implied, and those suggested by obvious common sense, can result in death, serious injury, and/or equipment damage.

General Maintenance

A good maintenance program involves thorough general housekeeping, adequate periodic re-lubrication, and timely adjustment of take-ups to maintain proper belt tension.

Periodic Inspection

At regularly scheduled intervals, while observing all safety precautions, observe the conveyor as it operates. Inspect for:

1. Check belt sag to ensure that it does not exceed the recommended 2% of idler spacing while loaded. (Refer to belt tensioning and initial tail section (take-up) adjustment *on Page 32*.)
2. Flippers on tail pulley are adjusted so they barely touch the bottom of the conveyor length.
3. Skirtboard wear and proper adjustment.
4. Bottom liner for excessive wear from belt or other foreign material.
5. Wear on head pulley lagging.
6. Loose or missing hardware.
7. Noisy bearings, motor, or reducer.
8. Overheated bearings, motor, or reducer.
9. Structural damage.
10. Rust or corrosion.
11. Damaged wiring, including exposed conductors and connections.
12. Periodically shut off and lock out all power to the conveyor. Check the plug switch and belt break/slip switch to see that they are functioning properly.
13. Check belt for damage due to foreign object caught in conveyor.
14. Make sure that all guards and warning labels are in place and legible. GENERAL SAFETY INFORMATION from *Pages 7-22*, explains the purpose and intended location of the warning signs. Safety section also lists the part numbers of the signs. Warning signs are an important part of any safety program; replace any missing signs IMMEDIATELY.

Lubrication

In all cases, the manufacturers of the individual components have precise recommendations for periodic lubrication of their products. Strict adherence to these procedures will result in a minimum of down time and maximum component life.

Reducer

Refer to the documentation furnished with the reducer. The user must interpret the data therein with respect to the severity of duty in each application. If there is any doubt, contact the manufacturer or a local supplier of the reducer for specific recommendations.

Motor

Many motors have sealed and permanently lubricated bearings; with these, no re-lubrication is possible or desirable. If bearings of this type become noisy or overheat, they must be replaced.

Motors having bearings which can be re-lubricated are usually larger horsepower sizes. Special pressure lubricating equipment may be required. Refer to the documentation furnished with the motor.

Mounted Bearings

Mounted bearings require periodic re-lubrication at appropriate intervals. The amount and frequency depends on the severity of the operating environment and the duty cycle. Refer to manufacturers recommendations for frequency, type and amount of lubrication.

Roller Chain Drive

For conveyors which include GSI supplied chain drives, the lubricant level in the chain case/cover should be maintained at a high enough level to immerse the lower sprocket teeth and roller chain. It must not be so high as to leak from the joints in the chain case.

Chain lubricant should be examined at appropriate intervals and changed whenever it is dirty or yearly, whichever occurs first. Use heavyweight 140 Wt. gearlube.

General Housekeeping

At frequent and regular intervals, remove the accumulated dirt from the motor and reducer to prevent overheating. Fan cooled motors depend upon unobstructed air flow over the housing for effective cooling.

Reducer gear cases must also be free of dirt for effective radiation of heat. Most reducers have a pressure vent which allows escape of vapors which may build up internally. If dirt blocks a vent, internal pressure can rupture seals. Leaking lubricant can contaminate product and will result in reducer failure and equipment downtime. Some manufacturers have refused to honor warranties in such cases.

DANGER

If despite the prohibition stated in the installation section of this manual, the conveyor has been employed as a stressed or tensioned support member, positively do not remove any side or bottom panels until shoring, staging, or other substantial support has been provided. Without adequate support, the conveyor can buckle or collapse entirely. Death or serious injury is possible.

If the conveyor was not emptied before beginning liner replacement, the product remaining in the trough could have considerable weight. Injury could result from falling material.

Bottom Liner Replacement

1. Remove and save all fasteners attaching the bottom panel and liner to the rest of the conveyor.
2. Unbolt old liner and replace with new liner. Bolt new liner to the bottom panel.
3. Lift the new bottom liner into position beneath the trough. Make sure the hole patterns match; if they do not, re-drill the holes as necessary. Re-fasten the bottom liner to the side panels.

Head Pulley Lagging Replacement

WARNING

Pulley lagging must be replaced with static dissipative material only. TIVAR 1000 or TIVAR 1000 EC anti-static UHMW shall be used.

The lagging acts as a barrier between the belt and the pulley to soften the interaction and extend belt life. It is possible to remove the lagging from the head pulley, and should be replaced before it wears down to the top of the retainer or the bottom of the grooves. Replacement can be done in two (2) ways. The first way is to remove the pulley from the conveyor assembly. On certain models, there are side doors on the head assembly to allow access to the pulley. To remove the lagging, bend the tabs on the side of the pulley up and then slide the lagging out from under the retainers. *(See Figure 7A.)* On some pulleys, the lagging is bolted to the pulley. *(See Figure 7B.)*

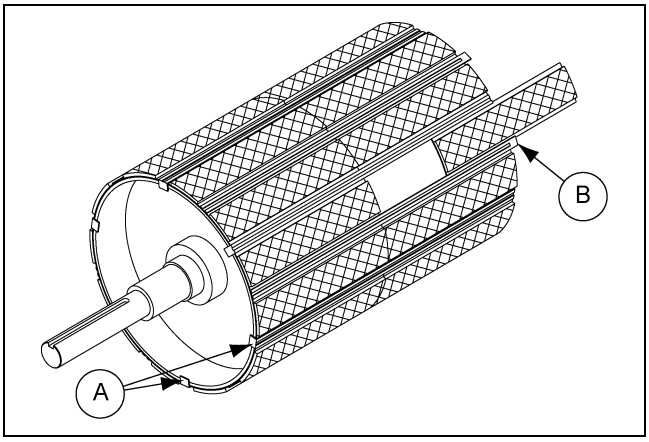

Figure 7A *Head Pulley with Tabbed Retainers*

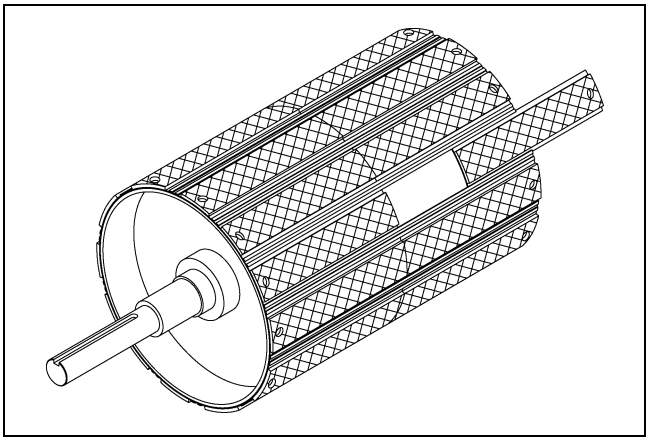

Figure 7B *Head Pulley Bolted Lagging*

Ref #	Description
A	Tabs

Ref #	Description
B	Tab Bent Up

Head Hood Removal

To access the inside of the head assembly, the hood can be easily removed. Access may be required to change the lagging of the pulley or to perform other routine maintenance and inspection. The hood is removed by unbolting it from the rest of the head assembly and sliding it back along the guide rails. This allows access to the head without having to take anything apart. The head in *Figure 7C* is shown with the bolts removed and the hood slid back on the bottom guide rails.

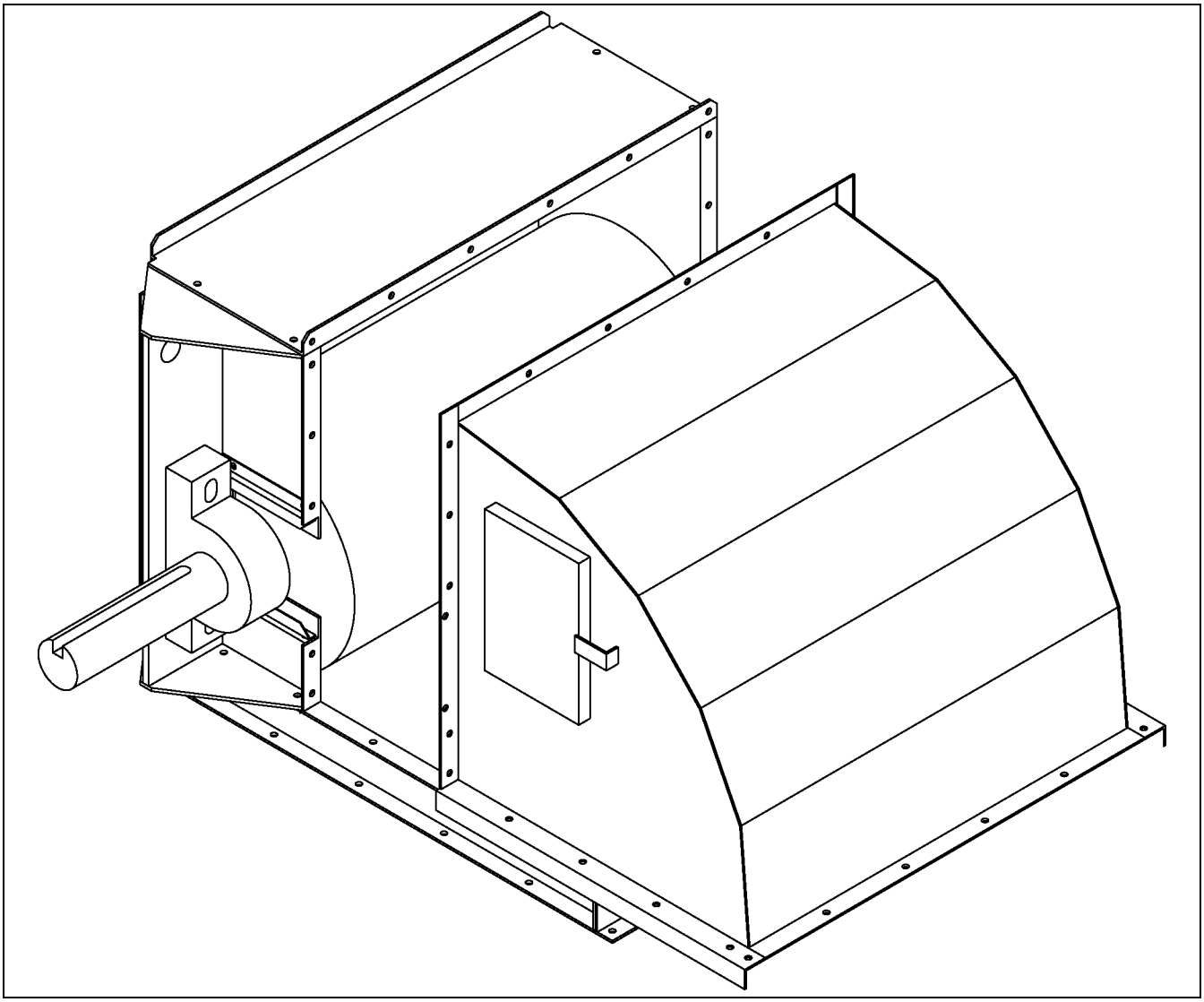

Figure 7C *Head Hood Removal*

If a problem is experienced at start-up, verify that the conveyor has been installed and is being operated within the parameters set forth when the conveyor was ordered and as stated in the quotation confirmation and shown on the certified drawing furnished with the conveyor. Among the factors to be considered are these:

What you should know:

1. Is the conveyor being used as designed in certified drawing such as inclined/declined service?
2. If the conveyor was designed for inclined service, does the degree of incline exceed the designed incline specified in the certified drawing?
3. Is the drive of different capacity or output speed than specified in the quotation?
4. Is the conveyor's capacity, either in terms of volume or weight of material being exceeded?
5. Is the conveyor being used to convey material different than that for which the conveyor was originally specified as shown on the certified drawings?
6. If there is insufficient drive belt tension, the drive belts will slip and the conveyor will operate at less than normal speed.
7. Check for obstructions at the conveyor inlet(s) or in the bins, hoppers, or chutes feeding the conveyor.
8. Look for holes in the belt carcass where a hole may be large enough to cause material spillage.
9. For belt tracking and wear problems, refer to table *below* for suggested reasons for listed problems.

Belt Troubleshooting

Complaint	Cause *(See Page 61 and Page 62.)* (In order of probable occurrence)
Belt runs off at tail pulley	8, 14, 13, 16, 20
Entire belt runs off at all points of the line	25, 16, 14, 20, 4, 15
One belt section runs off at all points of the line	2, 10, 1
Belt runs off at head pulley	14, 21, 20, 15
Belt runs to one side throughout entire length at specific idlers	14, 15, 20
Belt slip	18, 6, 20, 15, 21
Belt slip on starting	18, 6, 21, 9
Excessive belt stretch	12, 11, 20, 5, 8
Belt breaks at or behind fasteners; fasteners tear loose	2, 22, 12, 21, 19, 9
Vulcanized splice separation	12, 22, 9, 19, 2, 8
Excessive wear, including rips, gouges, ruptures, and tears	11, 24, 16, 20, 7
Excessive bottom cover wear	20, 13, 18, 19, 21
Excessive edge wear, broken edges	25, 4, 16, 7, 1, 20
Cover swells in spots or streaks	7
Belt hardens or cracks	7, 22, 21, 17
Covers become checked or brittle	7, 17
Longitudinal grooving or cracking of top cover	26, 13, 20, 11
Longitudinal grooving or cracking of bottom cover	13, 20, 21
Fabric decay, carcass cracks, ruptures, gouges (soft spots in belt)	11, 19, 9, 7, 23
Ply separation	12, 22, 10, 7, 3

Belt Troubleshooting Solutions

Symptoms	Solutions
1. Belt bowed	1. Avoid telescoping belt rolls or storing them in damp locations. A new belt should straighten out when “broken in” or it must be replaced.
2. Belt improperly spliced or wrong fasteners	2. Use correct fasteners. Re-tighten after running for a short while. If improperly spliced, remove belt splice and make new splice. Set up regular inspection schedule.
3. Belt speed too fast	3. Reduce belt speed.
4. Belt strained on one side	4. Allow time for new belt to “break in”. If belt does not break in properly or is not new, remove strained section and splice in a new piece.
5. Counterweight/tension too heavy	5. Re-calculate weight required and adjust counterweight accordingly. Reduce take-up tension to point of slip, then tighten slightly.
6. Counterweight/tension too light	6. Recalculate weight required and adjust counterweight or screw take-up accordingly.
7. Damage by abrasives, acid, chemicals, heat, mildew, oil	7. Use belt designed for specific conditions. For abrasive materials working into cuts and between plies, make spot repairs with cold patch or with permanent repair patch. Seal metal fasteners or replace with vulcanized step splice. Enclose belt line for protection against rain, snow, or sun.
8. Differential speed wrong on dual pulleys	8. Make necessary adjustment.
9. Drive underbelted	9. Re-calculate maximum belt tensions and select correct belt. If line is over extended, consider using two-flight system with transfer point. If carcass is not rigid enough for load, install belt with proper flexibility when service is lost.
10. Edge worn or broken	10. Repair belt edge. Remove badly worn or out-of-square section and splice in a new piece.
11. Excessive impact of material on belt or fasteners	11. Use correctly designed chutes and baffles. Make vulcanized splices. Install impact idlers. Where possible, load fines first. Where material is trapped under skirts, adjust skirtboards to minimum clearance or install cushioning idlers to hold belt against skirts.
12. Excessive tension	12. Re-calculate and adjust tension. Use vulcanized splice within recommended limits.
13. Frozen idlers	13. Free idlers. Lubricate. Improve maintenance. (Do not over lubricate)
14. Idlers or pulleys out-of-square with center line of conveyor	14. Re-align. Install limit switches for greater safety.
15. Idlers improperly placed	15. Relocate idlers or insert additional idlers spaced to support belt.

Symptoms	Solutions
16. Improper loading, spillage	16. Feed should be in direction of belt travel and at belt speed, centered on the belt. Control flow with feeders, chutes, and skirtboards.
17. Improper storage or handling	17. Refer to the manufacturer for storage and handling tips.
18. Insufficient traction between belt and pulley	18. Increase wrap with snub pulleys. Lag drive pulley. In wet conditions, use grooved lagging. Install correct cleaning devices for safety. *(See Step 7 on Page 61.)*
19. Material between belt and pulley	19. Use skirtboards properly. Remove accumulation. Improve maintenance.
20. Material build-up	20. Remove accumulation. Install cleaning devices and scrapers. Improve housekeeping.
21. Pulley lagging worn	21. Replace worn pulley lagging. Use grooved lagging for wet conditions. Tighten loose and protruding bolts.
22. Pulleys too small	22. Use large diameter pulleys.
23. Radius of convex vertical curve too small	23. Increase radius by vertical re-alignment of idlers to prevent excessive edge tension.
24. Relative loading velocity too high or too low	24. Adjust chutes or correct belt speed. Consider use of impact idlers.
25. Side loading	25. Load in direction of belt travel, in center of conveyor.
26. Skirts improperly placed	26. Install skirtboards so that they do not rub against belt.

Possible Ignition Sources	Equipment Related (Yes/No)	Reason
Hot Surfaces	Yes	1. Friction Vee Belt Drive
		2. Friction Conveyor Flat Belt
		3. Motors
		4. Gear Reducers
		5. Conductors
Mechanical Sparks	Yes	1. Conveyor/Internal Structure Impact
		2. Conveyor Foreign Object Impact
		3. Conveyor Belt Splice Impact
Flames, Hot Gases	Yes	1. Conductor Insulation
		2. Ignition of Dust/Material Layers
		3. Elevator Belt Slippage
Electric Sparks	Yes	1. Motors
		2. Electrical Connections
Stray Electric Current and Cathodic Corrosion Protection	Yes	1. Electrical equipment failure plus inadequate earth path.
Static Electricity	Yes	1. Conveyor Flat Belt
		2. Vee Belt
		3. Internal “lagging”
Lightning	Yes	None Present
Electromagnetic Waves	No	None Present
Ionising Radiation	No	None Present
High Frequency Radiation	No	None Present
Ultrasonics	No	None Present
Adiabatic Compression	No	None Present
Chemical Reaction	No	None Present

Ignition Source	Ignition Hazard	Control Method	Operator Intervention Required	Frequency
Hot Surfaces				
Conveyor Motor	Normal operating surface temperature generated heat due to power losses as heat.	Constructional safety “C”	Check motor heat dissipation surfaces are clean.	6 Months
		Motors are designed and certified to run at maximum temperature of 125°C.		
	Overheat due to dust layers in motor heat sink fins.	Control of ignition source “B”.	Check thermistor connections are sound. Check over current protection is correctly set.	12 Months
		Over temperature sensors in motor windings connected into safety control system designed to EN13849.		
		Safety control system to performance level “C”.		
		Operator preventative maintenance.		
	Overheat due to motor overload.	Control of ignition source “B”.	Check thermistor connections are sound. Check over current protection is correctly set.	13 Months
		Over temperature sensors in motor windings connected into safety control system designed to EN13849.		
		Ignition protection level 2 required.		
		Safety control system to performance level “C”.		
		Motor over current protection.		
		Operator preventative maintenance.		
Conveyor Gear Reducer	Normal operating surface temperature generated heat due to power losses as heat.	Constructional safety “C”	Check and clean the heat sink fins.	6 Months
		Gear reducers are pre-certified bought in components.		
		Maximum operating temperature is 135°C.		
	Gear reducer overheat due to blocked heat sink fins.	User intervention to maintain clear heat sink fins.		
	Gear reducer overheat due to insufficient oil.	User intervention to maintain observe oil leakage and maintain correct levels.		
	Gear reducer overheat due to overloading.	Control of ignition source “B”.		
		Ignition protection level 2 required.		
		Gearbox and motor power input/output are matched.		
		Motor provided with over current protection, such that any overloading at the gear reducer is reflected at the motor and the overload will open and trip the motor OFF.		
V-Belt Drive	Surface temperature under full load.	Under correct tensioning, heat gains will not result in temperature rises approaching dust ignition temperature. Max ambient temperature is 40°C.	Check and re-tension as required.	6 Months
		Normal running for friction based drive should not see rises over 50°C above ambient. T_{crit} is established as 120°C.		
	Surface temperature under overload/ slippage.	Control of ignition source “B”	Check speed monitoring system has correct settings in accordance with the rating plate.	12 Months
		Ignition protection level 1 required.		
		Belt slip detection through speed sensor in accordance with S_{norm} and S_{crit} on the rating plate.		
		S_{crit} is calculated based on motor power being dissipated as frictional heating on slipping belt.		
Conveyor Flat Belt	Surface temperature under full load	Under correct tensioning, heat gains will not result in temperature rises approaching dust ignition temperature.	Check and re-tension as required.	6 Months

Ignition Source	Ignition Hazard	Control Method	Operator Intervention Required	Frequency
Conveyor Flat Belt	Surface temperature under overload/ slippage.	Control of ignition source “B”.	Check speed monitoring system has correct settings in accordance with the rating plate.	12 Months
		Ignition protection level 1 required.		
		Belt slip detection through speed sensor in accordance with S_{norm} and S_{crit} on the rating plate.		
		S_{crit} is calculated based on motor power being dissipated as frictional heating on slipping belt.		
	Frictional heating due to rubbing on conveyor side due to misalignment.	Control of ignition source “B”.		
		Ignition protection level 1 required.		
		Belt alignment sensor system, senses belt misalignment and causes safe shut down.		
Bearings	Temperature	Constructional safety “C”		
		The bearings are designed for the equipment’s intended duty, speed, temperature, loading and variations of speed and loading.		
		Installation, fit, tolerances and alignment are all in accordance with manufacturer specifications.		
		Lubrication is pre-installed and may be topped up via grease zerk.		
		Bearings are sealed from dust ingress.		
	Increase temperature due to ingress of dust/loss of lubrication.	Constructional safety “C”	Visual check of bearings Re-grease.	Monthly
		User intervention to visually check bearings.		
		Grease bearings as part of routine maintenance.		
		Control of ignition source “B”.	Check functionality of safety control circuit.	Each 12 Months
		Ignition protection level 1 required.		
		Bearing temperature monitoring system to be connected to safety control circuit in accordance with EN13849.		
		T_{crit} established as 120°C.		
Belt Pulley	Build-up of debris inside conveyor resulting in frictional heating between moving parts and compacted debris.	Constructional safety “C”		
		Normal operation of elevator will move dirt and debris from boot area.		
		Constructional safety “C”	Open conveyor boot and check for debris build up. Clean out.	Each 3 Months
		User intervention to carry out regular maintenance to clean-out conveyor boot.		

Ignition Source	Ignition Hazard	Control Method	Operator Intervention Required	Frequency
Mechanical Sparks				
General	Materials used in construction.	Constructional safety “C”		
		All construction materials are “non-sparking”.		
	Foreign object eg stone or tramp metal friction/ impact and sparking.	Constructional safety “C”	Use stone/metal separator.	Continuous
		Grain to be clean and free from foreign objects (use stone/metal separator).		
Belt Splice	Sparking between belt splice and head/tail pulley.	Risk of spark is low due to near zero impact energy.	Belt splice bolts to be checked.	12 Months
		Non-sparking splice used, installed according to 4B installation instructions.		
Flames/Hot Gases				
Electrical System - Conductors	The hazard covered by high surface temperatures above.		EN60204 Calculations	
Electrical Sparks				
Conductor Connections to Motor or Switch Terminal Box	Loose connection causing arcing.	All electrical installation is responsibility of installer.	Electrical installation to be in accordance with ATEX requirements and EN60204. Carried out by certified electrical installer.	Initial Installation
	Loose connection causing arcing.	All electrical installation is responsibility of installer.	Terminal connections and conductors to be checked for tightness.	12 Months
Stray Electric Current				
Electrical System	Normal Use	Conveyor is to be provided with equi-potential bonding of all conductive parts to a single earth connection (or multiple earth connections which are interconnect themselves).		
	Failure of PE connection	Conductive parts to have redundancy in connections to PE terminal, i.e. via dedicated PE connection at the electrical components plus structure bonding to PE.	Check Earth Continuity	12 Months
Static Electricity				
Internal Lagging	Normal use - charging due to grain abrasion on non-conductive filaments.	Constructional safety “C”		
		Lagging material is Tivar,“anti-static”, dissipative material with connection to earth for safe discharge of generated static electricity.		
		Dust has minimum ignition energy of >20 mJ. In general this eliminates corona, brush and bulking brush discharge as possible ignition sources.		
		Zone 22, 21 and 20 are generally low risk of ignition from non-conductive material sources of ignition.		
	Failure of PE connection, charge not dissipated.	Redundancy in the PE will provide alternative route to earth for generated electrostatic charge.	Check Earth Continuity	12 Months

Ignition Source	Ignition Hazard	Control Method	Operator Intervention Required	Frequency
Conveyor Belt	Continuous separation of belt from head/tail pulley. Risk of electrostatic charging and incendive discharge.	Constructional safety “C”		
		Frasor/steel V-belt is “anti-static”, being dissipative and having surface resistance of 3 x 10^8 ohm.		
		Belt is connected, via steel pulley, to earth to provide safe discharge of static charge.		
	Replacement of belt with incorrect materials.		Correct replacement belt only to be used. Surface resistivity <= 3 x 10^8 ohm.	Each Replacement
	Failure of PE connection, charge not dissipated.	Redundacy in the PE will provide alternative route to earth for generated electrostatic charge.	Check Earth Continuity	12 Months
Drive Belt	Continuous separation of belt from drive/driven pulley. Risk of electrostatic charging and incendive discharge.	Constructional safety “C”		
		Frasor/steel V-belt is “anti-static”, being dissipative and having surface resistance of 3 x 10^8 ohm.		
		Belt is connected, via steel pulley, to earth to provide safe discharge of static charge.		
	Replacement of belt with incorrect materials.		Correct replacement belt only to be used. Surface resistivity <= 3 x 10^8 ohm.	Each Replacement
	Failure of PE connection, charge not dissipated.	Redundacy in the PE will provide alternative route to earth for generated electrostatic charge.	Check Earth Continuity	12 Months

Information regarding the installation procedures of BM 65 Series Diaphragm switches can be downloaded from the BinMaster website.

Go to www.binmaster.com/resources/dyn/files/1068329zeb9efe1d/_fn 9270077_RevA_BM65_Series.pdf

Limited Warranty - EME Grain Products

The GSI Group, LLC. (“GSI”) warrants products which it manufactures, to be free of defects in materials and workmanship under normal usage and conditions for a period of 12 months from the date of shipment (or, if shipped by vessel, 14 months from the date of arrival at the port of discharge). If, in GSI’s sole judgment, a product is found to have a defect in materials and/or workmanship, GSI will, at its own option and expense, repair or replace the product or refund the purchase price. This Limited Warranty is subject to extension and other terms as set forth below.

Warranty Enhancements:

The warranty period for the following products is enhanced as shown below and is in lieu of (and not in addition to) the above stated warranty period. (Warranty Period is from date of shipment.)

	Product	Warranty Period
Storage	Grain Bin Structural Design • Sidewall, roof, doors, platforms and walkarounds • Flooring (when installed using GSI specified floor support system for that floor) • Hopper tanks (BFT, GHT, NCHT, and FCHT)	5 Years
Conditioning	Dryer Structural Design - (Tower, Portable and TopDry) • Includes (frame, portable dryer screens, ladders, access doors and platforms)	5 Years
	All other Dryer parts including: • Electrical (controls, sensors, switches and internal wiring)	2 Years
	All Non-PTO Driven Centrifugal and Axial Fans	3 Years
	Bullseye Controllers	2 Years
Material Handling	Bucket Elevators Structural Design	5 Years
	Towers Structural Design	5 Years
	Catwalks Structural Design	5 Years
	Accessories (stairs, ladders and platforms) Structural Design	5 Years

Conditions and Limitations:

THERE ARE NO WARRANTIES THAT EXTEND BEYOND THE LIMITED WARRANTY DESCRIPTION SET FORTH HEREIN; SPECIFICALLY, GSI DISCLAIMS ANY AND ALL OTHER WARRANTIES OF ANY KIND, EXPRESS OR IMPLIED, INCLUDING, WITHOUT LIMITATION, WARRANTIES OF MERCHANTABILITY OR FITNESS FOR A PARTICULAR PURPOSE OR USE IN CONNECTION WITH: (I) ANY PRODUCT MANUFACTURED OR SOLD BY GSI, OR (II) ANY ADVICE, INSTRUCTION, RECOMMENDATION OR SUGGESTION PROVIDED BY AN AGENT, REPRESENTATIVE OR EMPLOYEE OF GSI REGARDING OR RELATED TO THE CONFIGURATION, INSTALLATION, LAYOUT, SUITABILITY FOR A PARTICULAR PURPOSE, OR DESIGN OF SUCH PRODUCTS.

The sole and exclusive remedy for any claimant is set forth in this Limited Warranty and shall not exceed the amount paid for the product purchased. This Warranty only covers the value of the warranted parts and equipment, and does not cover labor charges for removing or installing defective parts, shipping charges with respect to such parts, any applicable sales or other taxes, or any other charges or expenses not specified in this Warranty. GSI shall not be liable for any other direct, indirect, incidental or consequential damages, including, without limitation, loss of anticipated profits or benefits. Expenses incurred by or on behalf of a claimant without prior written authorization from the GSI warranty department shall not be reimbursed. This warranty is not transferable and applies only to the original end-user. GSI shall have no obligation or responsibility for any representations or warranties made by or on behalf of any dealer, agent or distributor. Prior to installation, the end-user bears all responsibility to comply with federal, state and local codes which apply to the location and installation of the products.

This Limited Warranty extends solely to products sold by GSI and does not cover any parts, components or materials used in conjunction with the product, that are not sold by GSI. GSI assumes no responsibility for claims resulting from construction defects, unauthorized modifications, corrosion or other cosmetic issues caused by storage, application or environmental conditions. Modifications to products not specifically delineated in the manual accompanying the product at initial sale will void all warranties. This Limited Warranty shall not extend to products or parts which have been damaged by negligent use, misuse, alteration, accident or which have been improperly/inadequately maintained.

Notice Procedure:

In order to make a valid warranty claim a written notice of the claim must be submitted, using the RMA form, within 60 days of discovery of a warrantable nonconformance. The RMA form is found on the OneGSI portal.

Service Parts:

GSI warrants, subject to all other conditions described in this Warranty, Service Parts which it manufactures for a period of 12 months from the date of purchase unless specified in Enhancements above.

(Limited Warranty - EME Grain Products_ revised 01 October 2020)

This equipment shall be installed in accordance with the current installation codes and applicable regulations, which should be carefully followed in all cases. Authorities having jurisdiction should be consulted before installations are made.

1004 E. Illinois St.
Assumption, IL 62510-0020
Phone: 1-217-226-4421
Fax: 1-217-226-4420
www.gsiag.com

Printed in the Europe

CN-400201