PNEG-1579
06-08-07

12" & 16" Series II Sweep

(Special)

Owner's Manual

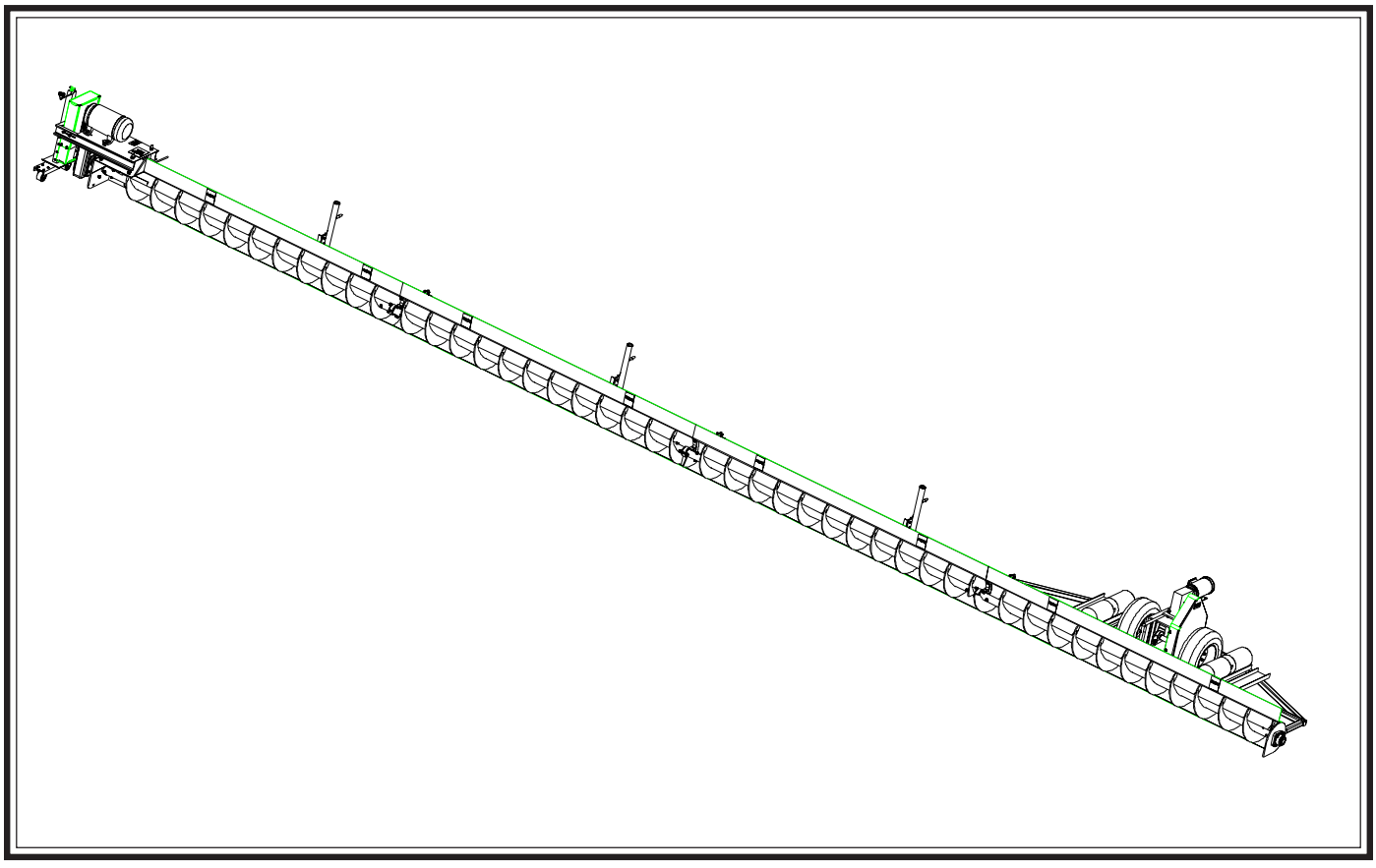

PNEG-1579

Model Number of My Sweep:

_____

Date Delivered:

_____

Date Installed:

_____

NOTE

The manufacturer reserves the right to improve it's product whenever possible and practical to do so. We reserve the right to change, improve and modify products at any time without obligation to make changes, improvements and modifications on equipment sold previously.

TABLE OF CONTENTS

Safety 4-8
Introduction 9-10
Decals 11-14
Operator Qualifications 15
General Product Information 16-19
Assembly Section
- Back Shield 20
- Flighting 22
- Hanger Bracket 23
- Flange Bearing 24
- Gear Reducer 24
- Drive Axle & Bearing Support 25
- Reducer Mounting Plate & Reducer 27
- Key Alignment 27
- Tractor Motor 28
- Guard Assembly 29
- Tractor Wheel Assembly 30
- Counter Weight 31
- Weight Channel Extension Kit 32
- Motor Jack & Base Assembly 33
- Motor Installation 34
- Sheave Installation 35
- Electrical Assembly 37
- Jack Support 43
- Center Pivot 45
- Control Panel 48

Start-Up 50
Operation 52
Shutdown 54
Storage Preparation 54
Maintenance 55
Control Panel Schematics 62
Troubleshooting 65
Part Lists 66
Warranty ..... Inside Back Cover

Personnel operating or working around this equipment should read this manual. This manual must be delivered with equipment to its owner. Failure to read this manual and its safety instructions is a misuse of the equipment. Any misuse of the equipment may void the warranty.

SAFETY 1st

GSI equipment is built to provide many years of dependable service to our customers through durable craftsmanship.

One of the most important aspects of GSI engineering is ***SAFETY*** **1st** design throughout all product lines. At GSI **-** safety is NO ACCIDENT!

That is why GSI is implementing its ***SAFETY*** **1st** program. Should you ever need safety decals, or owner/operator manuals, simply contact GSI, and we will supply you with them **FREE OF CHARGE**!

While it is our main goal for GSI to be the world leader in auger manufacturing, it is always our first priority to keep our customers safe.

If you need any of the above listed safety items or have safety questions, please contact GSI:

The GSI Group
PO Box 20
1004 E. Illinois Street
Assumption, IL 62510
Ph: 217-226-4421

SAFETY GUIDELINES

This manual contains information that is important for you, the owner/operator, to know and understand. This information relates to protecting ***personal safety*** and ***preventing equipment problems***. It is the responsibility of the owner/operator to inform anyone operating or working in the area of this equipment of these safety guidelines. To help you recognize this information, we use the symbols that are defined below. Please read the manual and pay attention to these sections. Failure to read this manual and it's safety instructions is a misuse of the equipment and may lead to serious injury or death.

This is the safety alert symbol. It is used to alert you to potential personal injury hazards. Obey all safety messages that follow this symbol to avoid possible injury or death.

⚠ DANGER **DANGER** indicates an imminently hazardous situation which, if not avoided, will result in death or serious injury.

⚠ WARNING **WARNING** indicates a potentially hazardous situation which, if not avoided, could result in death or serious injury.

⚠ CAUTION **CAUTION** indicates a potentially hazardous situation which, if not avoided, may result in minor or moderate injury.

CAUTION **CAUTION** used without the safety alert symbol indicates a potentially hazardous situation which, if not avoided, may result in property damage.

NOTE **NOTE** indicates information about the equipment that you should pay special attention to.

Safety Instructions

GSI's principle concern is your safety and the safety of others associated with grain handling equipment. We want to keep you as a customer. This manual is to help you understand safe operating procedures and some problems which may be encountered by the operator and other personnel.

As owner and/or operator, it is your responsibility to know what requirements, hazards and precautions exist, and to inform all personnel associated with the equipment or in the area. Safety precautions may be required from the personnel. Avoid any alterations to the equipment. Such alterations may produce a very dangerous situation, where SERIOUS INJURY or DEATH may occur.

This equipment shall be installed in accordance with the current installation codes and applicable regulations which should be carefully followed in all cases. Authorities having jurisdiction should be consulted before installations are made.

OPERATE UNLOAD EQUIPMENT PROPERLY

Operate Unload Equipment Safely

Make sure ALL equipment is locked in position before operating.

NEVER start equipment until ALL persons are clear of the work area.

Use caution not to hit the auger when positioning the load.

Be sure all operators are adequately rested and prepared to perform all functions of operating this equipment.

Untrained operators subject themselves and others to SERIOUS INJURY or DEATH. NEVER allow untrained personnel to operate this equipment.

Keep children and other unqualified personnel out of the working area at ALL times.

NEVER allow any person intoxicated or under the influence of alcohol or drugs to operate the equipment.

NEVER work alone. Make sure someone is nearby who is aware of the proper shutdown sequence in the event of an accident or emergency.

ALWAYS think before acting. NEVER act impulsively around the equipment.

NEVER allow anyone inside a bin, truck or wagon which is being unloaded by an auger or conveyor. Flowing grain can trap and suffocate in seconds.

Use ample overhead lighting after sunset to light the work area.

Keep area around intake free of obstacles such as electrical cords, blocks, etc. that might trip workers.

NEVER drive, stand or walk under the equipment.

ALWAYS lockout ALL power to the equipment when finished unloading a bin.

Be aware of pinch points. A Pinch point is a narrow area between two surfaces that is likely to trap or catch objects and so is a potential safety hazard.

FOLLOW SAFETY INSTRUCTIONS

Carefully read all safety messages in this manual and safety signs on your equipment. Keep signs in good condition. Replace missing or damaged safety signs. Be sure new equipment components and repair parts include the current safety signs. Replacement safety signs are available from the manufacturer.

Learn how to operate the machine and how to use controls properly. Do not let anyone operate without instruction.

Keep your machinery in proper working condition. Unauthorized modifications to the machine may impair the function and/or safety and affect machine life.

If you do not understand any part of this manual and need assistance, contact your dealer.

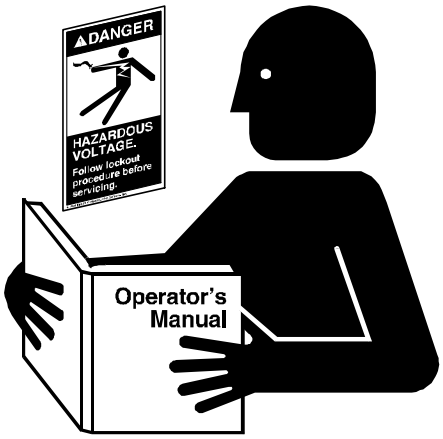

Read and Understand Manual.

KEEP HANDS AWAY FROM MOVING PARTS

Keep hands and feet away from auger intake and other moving parts. Rotating auger can sever a person's limbs or even kill.

Keep hair, loose clothing, and shoestrings away from rotating and moving parts. NEVER wear loose fitting clothing when working around augers.

ALWAYS turn off and lock out all power sources before servicing equipment.

ALWAYS keep belt and chain guards in place during operation.

NEVER attempt to assist machinery operation or to remove trash from equipment while in operation.

Rotating Auger

OPERATE MOTOR PROPERLY

In an emergency, shut down the power source.

Turn off and lock out all power sources before performing any maintenance.

Do not operate electric motor equipped units until motors are properly grounded.

Disconnect power on electrical driven units before resetting motor overloads.

Do not repetitively stop and start the drive in order to free a plugged condition. Jogging the drive in this type of condition can damage the auger and/or drive components.

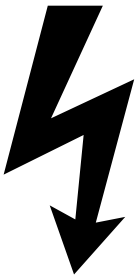

Electric Shock Hazard.

PRACTICE SAFE MAINTENANCE

Understand service procedures before doing work. Keep area clean and dry.

Never lubricate, service, or adjust machine while it is in operation. Keep hands, feet, and clothing from rotating shafts, screws, belts, or other moving equipment.

Keep all parts in good condition and properly installed. Fix damage immediately. Replace worn or broken parts. Remove any build up grease, oil, or debris.

Maintain Equipment and Work Area.

WEAR PROTECTIVE CLOTHING

Wear close fitting clothing and safety equipment appropriate to the job.

Safety glasses should be worn at all times to protect eyes from debris.

Wear gloves to protect your hands from sharp edges on plastic or steel parts.

Use a respirator to prevent breathing potentially toxic fumes and dust.

Wear hard hat and steel toe boots to help protect your head and toes from falling debris.

Remove all jewelry.

Tuck in any loose or dangling shoe strings.

Long hair should be tied up and back.

Eye Protection

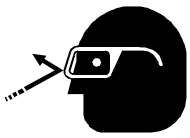

Gloves

Steel Toe Boots

Respirator

Hard Hat

PREPARE FOR EMERGENCIES

Be prepared if fire starts.

Keep a first aid kit and fire extinguisher handy.

Keep emergency numbers for doctors, ambulance service, hospital, and fire department near your telephone.

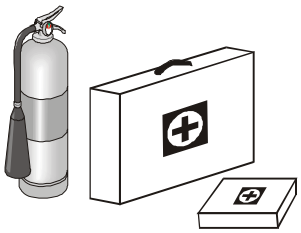

Keep Emergency Equipment Quickly Accessible.

PRODUCT INTRODUCTION

Congratulations! Your selection of the GSI Series 2 Sweep was a wise investment. It will give you years of dependable service. The main function of the Series 2 Sweep is to clean out the remaining grain, from the bin, after all gravity unloading has finished. The GSI Series 2 Sweep is a single pass sweep only. The unit will only operate in a round grain bin equipped with a center sump in the bin floor. NOTE: The bin manufacturer should be contacted for their recommendations on your bin's structural integrity. The following are sweep criteria recommendations.

ISSUES	RECOMMENDATIONS
Flooring	**The flooring type of choice is concrete. However, the sweep can be used on a full aeration floor. When installing a sweep on a full aeration floor, the floor manufacturer should be contacted for proper recommendations concerning supporting of the floor. It is required to lay a track, 10 Ga. minimum with slip resistant finish, under the sweep at the points of contact of the tractor drive tires, and 10 Ga minimum, under the points of contact of the intermediate jacks over any type of aeration flooring, both full floor or flush floor aeration. A chart is included that shows radius dimensions locating the points of contact between the sweep and the bin floor. The dimensions may be used to figure the material quantities of track to support the sweep across the aeration flooring. The track material is not supplied with the sweep and must be supplied by the installer or purchased from GSI. The dimensions are approximate and the assembled sweep should be checked for exact points of contact.**
Center Sump Size	**When installing a 12" standard sweep, the minimum recommended opening is 36" x 36". With a 16" standard sweep, it is 42" x 42". If installing a sump with collector ring, the opening will be 42" x 42" for both sweep sizes.** **The sump hopper supplied by GSI was designed with sufficient clearance around the collector ring housing to allow grain to gravity flow thru the hopper and be carried away by the material handling equipment below. 42 3/4" is the maximum opening size to allow rolling clearance for the casters assembled to the head end jack. If made smaller, grain flow may be decreased to an unacceptable level.** ****Flow of grain is limited to 15,000 BPH when using this sump and collector ring housing assembly. The collector ring housing extends 22 1/2" down from the floor surface and is approximately 14 1/4" x 14 1/4" in size.**
Number of Intermediate Sumps.	**It is recommended to install the intermediate sumps on a maximum of 10' centers where the sweep will be parked during storage. The extra sumps will help clean out the grain in front of the sweep reducing the start-up load. Doing this will save labor dollars and hours of work to uncover the sweep and can help the sweep during start-up. The sweep should be parked behind the intermediate sumps with the sumps on the auger side of the sweep.**

Routing the Power Supply to the Sweep.

There are three (3) options for routing the power. The most used option is to run the cords out the door in the sidewall. Another option is to use the hopper sump with collector ring. This allows the power to be transferred through a mechanical device in the center sump and does not twist any cords. This method is popular overseas. Last, is by using the pivot kit, which routes the power cord through the center sump. Using this kit requires the sweep to be backed up to the start point after sweeping. The pivot kit is not the preferred choice due to the cord twisting repeatedly.

Floor Level Tolerance

The top edge of the sump hopper and the top edge of the "X" brace support must be level with the floor. The floor must be level within 3/4" plus or minus, preferably less. Any high or low points must be gradually sloped. The change in elevation should be no more than 3/4" over 60".

Bin Roundness Tolerance

Diameter tolerances are limited by foundation limits and sweep operation as well as structural issues. For 72' diameter and larger the overall tolerance would be plus or minus 1 1/4" on the radius, plus or minus 1" on 42'-66' diameter bins and plus or minus ¾" on 30' – 39' bins.

Bin Opening Size Required for Installation

The tail section is the largest piece of a standard Series 2 Sweep. The dimensions for a 16" tail section are 23 1/2" x 55 1/4". If the bin wall is not too thick, this unit should fit thru a 23 1/2" x 47" opening. The dimensions for a 12" tail section are 21 1/4" x 51 1/2" Again, if the bin wall is not too thick the section should fit thru an opening 21 1/2 x 45"

GSI offers a special Knock Down Sweep, uniquely designed for storage units with small doors. This sweep is broken into 10 main pieces that can fit through a door as small as 30 1/2" in diameter for 16", 27 1/2" in diameter for 12", or a 20" x 24" rectangular door. The components are then assembled inside the storage unit.

Electrical Requirements

Electrical controls and wiring should be installed by a qualified electrician. The motor disconnect switches and conductor cables should comply with the National Electrical and any local codes which may apply.

A main power disconnect switch capable of being locked only in the OFF position should be used. Disconnect and lock out the power before servicing the equipment, entering the bin, or resetting the motor overloads.

The control panel MUST be mounted OUTSIDE the bin near the door. It must be located so the operator has a full view of the equipment and can see that all personnel are clear. It must NEVER be installed inside the bin. The foot switch has to be plugged into the control panel and depressed before the sweep is operational. It has a 10' cord so the sweep can only be monitored from OUTSIDE the bin. The thermal protection cord must also be plugged in before the sweep will operate.

DECALS

A. The images below show the location of the decals and safety signs which should appear on the Series II Sweep. **(refer to pg. 13-15 for decals)**

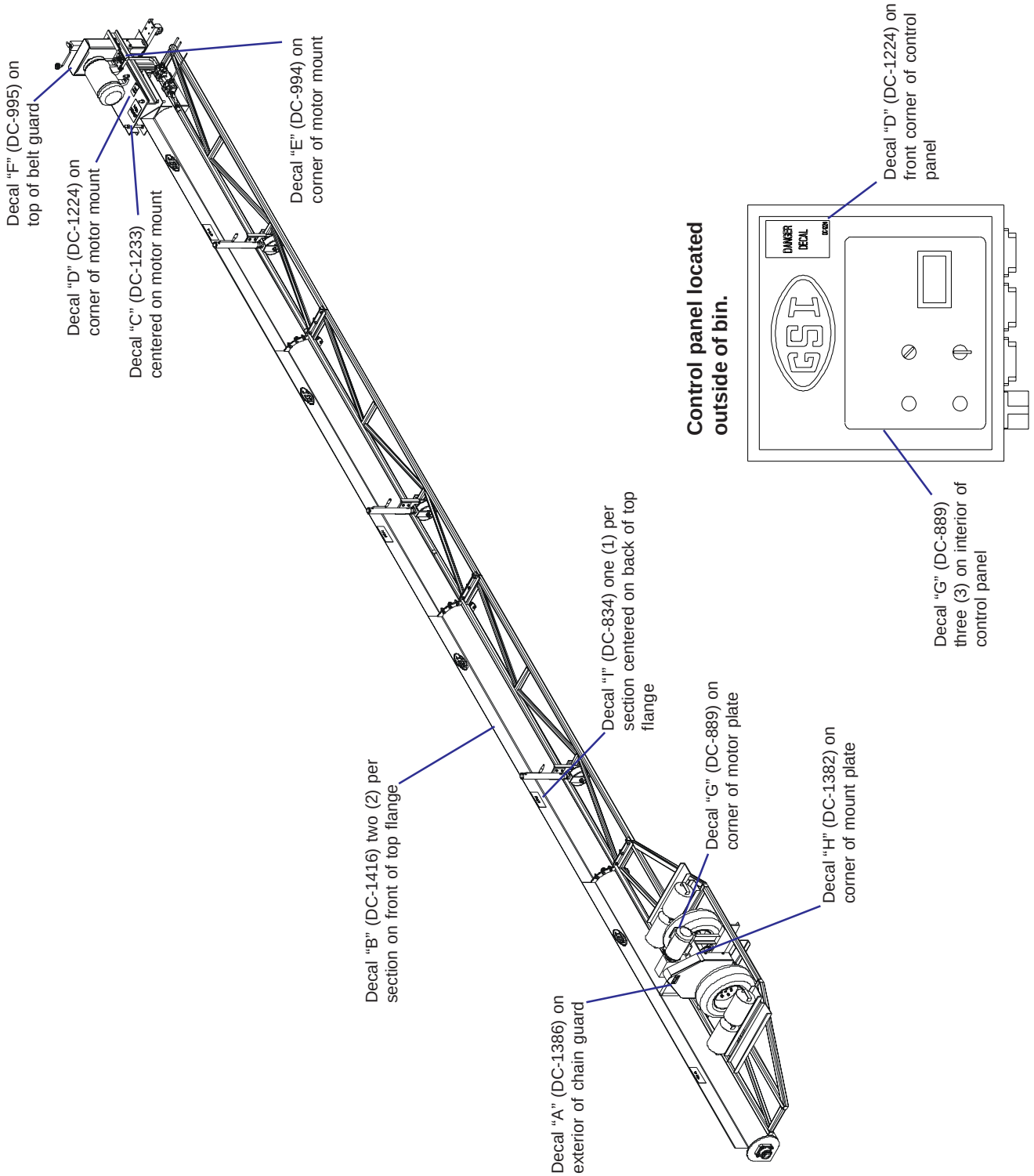

Please remember safety signs provide important safety information for people working near bin unloading equipment that is in operation.
Any safety signs that are worn, missing, illegible or painted over should be replaced immediately. Obtain *FREE* replacements by contacting GSI.

DECALS (CONT.)

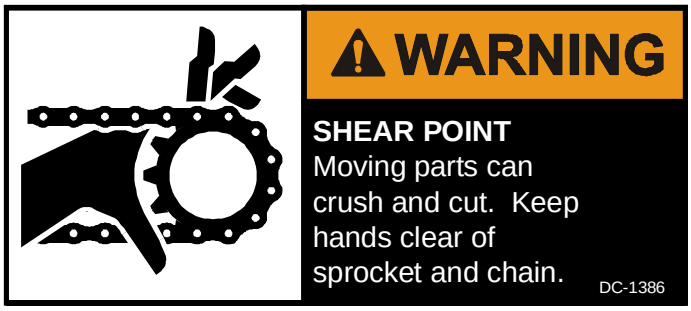

Decal "A"

Location: Exterior of chain guard
Size: 2" x 4 1/2"
Part No.: DC-1386

Decal "B"

Location: Two (2) per section on front of top flange
Size: 4 5/16" x 5 7/16"
Part No.: DC-1416

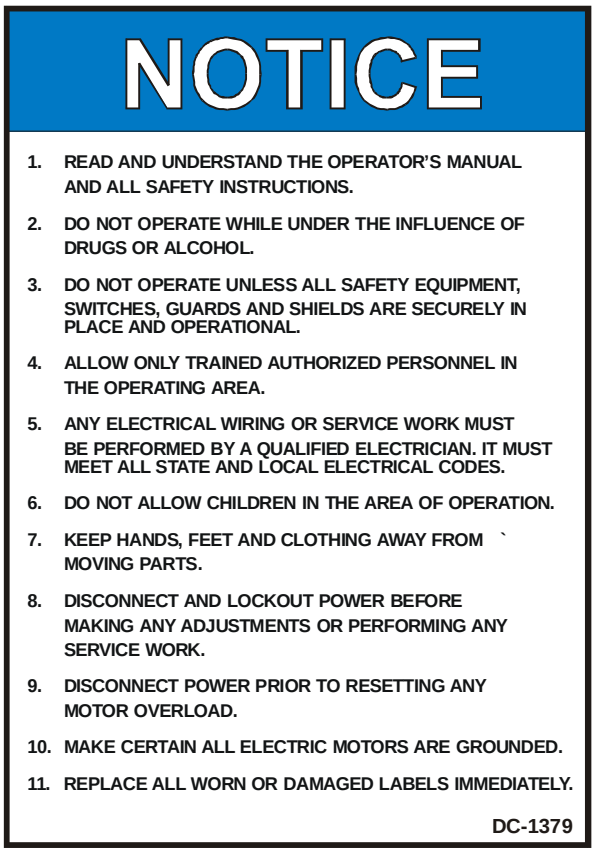

Decal "C"

Location: Centered on motor mount
Size: 5 1/2" x 7 3/8"
Part No.: DC-1379

Decal "D"

Location: Corner of motor mount
Size: 2 7/8" x 5"
Part No.: DC-1224

DECALS (CONT.)

Decal "E"
Location: Corner of motor mount
Size: 4 1/2" x 2"
Part No.: DC-994

Decal "F"
Location: Top of belt guard
Size: 4 1/2" x 2"
Part No.: DC-995

Decal "G"
Location: Corner of motor plate
Size: 2 13/16" x 1 7/16"
Part No.: DC-889

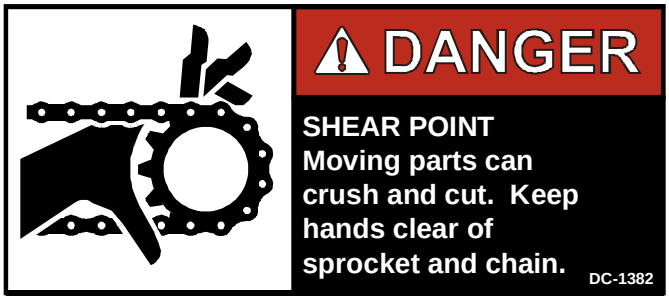

Decal "H"
Location: Corner of mount plate
Size: 4" x 1 3/4"
Part No.: DC-1382

Decal "I"
Location: One (1) per section centered on back of top flange
Size: 9" x 3 3/4"
Part No.: DC-834

DECALS (CONT.)

A. DANGER Sign No. DC-1395 was supplied with your bin unloading equipment. This safety sign should be applied to the side of the bin near the bin opening, so it will be viewed by people entering into the bin storage building. Do not cover any safety signs or any other signs that are already there.

B. If the safety sign location suggested is not in full view because of equipment modifications, other equipment in the area or any reason, then locate the safety sign in a more suitable location.

C. Be certain the surface is clean, dry and free of dirt and oil. Peel paper backing from decals and stick into place. The adhesive backing will bond on contact.

Please remember, safety signs provide important safety information for people working near bin unloading equipment that is in operation.

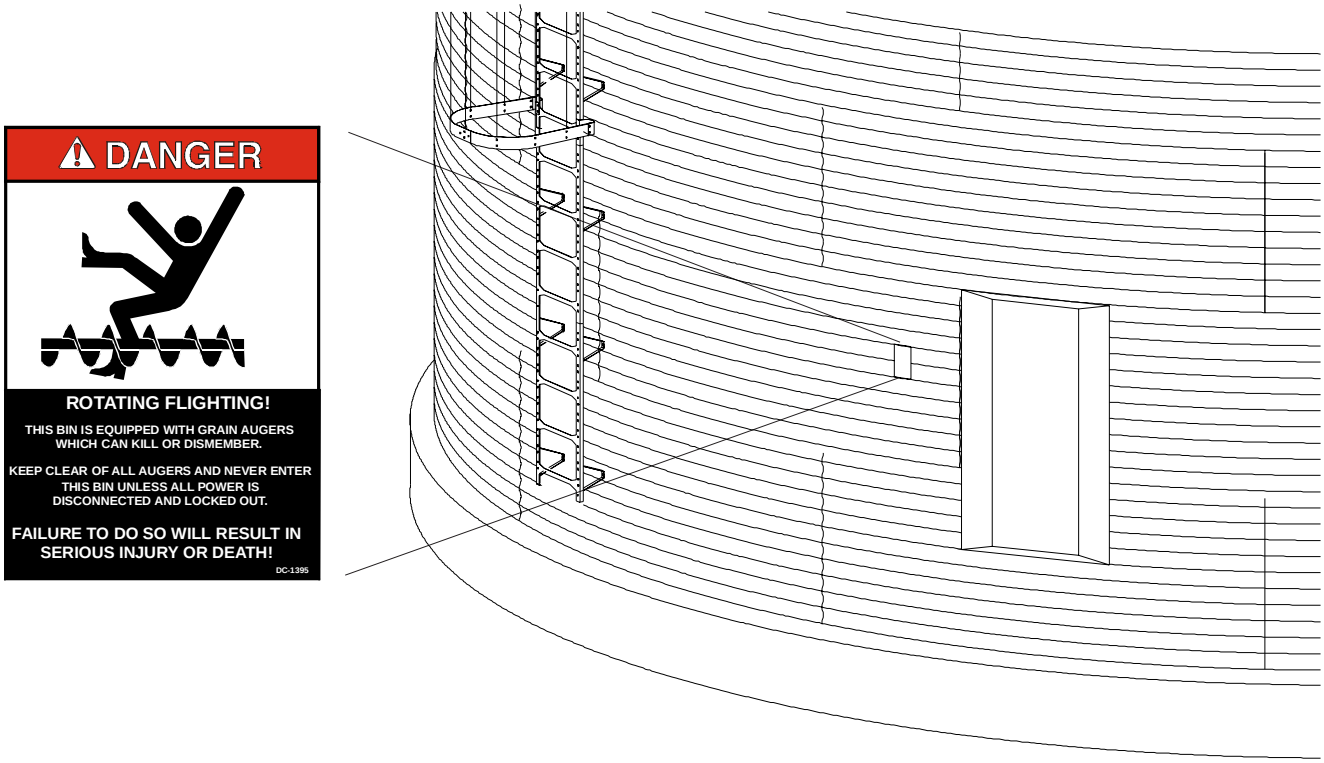

If the Safety Sign cannot be easily read for any reason or has been painted over, replace it immediately.
Additional Safety Signs may be obtained free of charge from your dealer, distributor or ordered from the factory.

Order SAFETY SIGN NO. DC-1395

OPERATOR QUALIFICATIONS.

A. The User/Operator must be competent and experienced to operate auger equipment. Anyone who works with or around augers must have good common sense in order to be qualified. These persons must also know and meet all other qualifications, such as:

1. Any person who has not read and/or does not understand all operation and safety instructions is not qualified to operate any auger systems.

2. Certain regulations apply to personnel operating power machinery. Personnel under the age of 18 years may not operate power machinery, including augers. It is your responsibility, as owner and/or supervisor, to know what these regulations are in your area or situation.

3. Unqualified or incompetent persons are to remain out of work area.

4. O.S.H.A. (Occupational Safety & Health Administration) regulations state: “At the time of initial assignment and at least annually thereafter, the employer shall instruct every employee in the safe operation and servicing of all equipment with which the employee is, or will be involved.” (Federal Occupational Safety & Health Standards for Agriculture. Sub part D, Section 19287.57 (a) (6).

B. As a requirement of OSHA, it is necessary for the employer to train the employee in the safe operating and safety procedures for this auger. We included this sign-off sheet for your convenience and personal record keeping. All unqualified people are to stay out of the work area at all times. It is strongly recommended that another qualified person who knows the shutdown procedure is in the area in the event of an emergency. A person who has not read this manual and understands all operating and safety instructions, is not qualified to operate the machine.

Date	Employees Name (printed)	Employees Signature
	1	
	2	
	3	
	4	
	5	
	6	
	7	
	8	
	9	
	10	
	11	
	12	
	13	
	14	
	15	
	16	
	17	
	18	
	19	
	20	
	21	
	22	
	23	
	24	
	25	

1. PRODUCT INFORMATION

Attention! This Series 2 Sweep is a single pass sweep. Consult the manufacturer of your storage tank regarding the requirements or restrictions of the sweeping process. The manufacturer may require a multiple pass sweep.

A. The Series 2 Sweep includes the following components:
- control panel
- two (2) motors
- motor covers
- motor mount
- auger flighting
- auger backshield assembly
- jack supports

B. The unit will operate only in a round grain bin equipped with a center sump in the bin floor.

NEVER enter a grain bin unless ALL power driven equipment has been shut down. Disconnect and lockout power before entering the bin or servicing the equipment.

2. GENERAL INFORMATION.

A. GSI reserves the right to improve its product whenever possible and practical to do so. We reserve the right to change, improve and modify products at any time without obligation to make changes, improvements and modifications on equipment sold previously.

B. This new bin sweep auger has been engineered and manufactured to give years of dependable service. The care and maintenance of this equipment will affect the satisfaction and service obtained. By following the instructions and suggestions recommended, the owner should receive quality service for many years. If additional information or assistance should be required, please contact GSI.

C. It is important to check both the quantity of parts and their descriptions with the packing list enclosed within each package. All claims for freight damage or shortage must be made by the consignee within ten (10) days from the date of the occurrence of freight damage. The consignee should accept the shipment after noting the damage or loss.

2. GENERAL INFORMATION (CONT.)

D. The chart below shows radius dimensions locating the points of contact between the sweep and the bin floor. The dimensions may be used to figure material quantities of track to support the sweep across the aeration flooring. The track material is not supplied with the sweep and must be supplied by the installer. The dimensions are approximate and the assembled sweep should be checked for exact point of contact.

RADIUS DIMENSIONS								
Bin Dia.	Sections	Head	Intermediate	Intermediate	Inside Tire	Outside Tire	End Caster 16" Only	Extension
36'	2	36"			109"	139"	198"	
37'	2	44"			121"	151"	210"	
39'	2	52"			133"	163"	222"	
40'	2	52"			133"	163"	222"	
42'	2	60"			145"	175"	234"	
43'	2	64"			157"	187"	246"	
45'	2	64"			157"	187"	246"	
48'	2	84"			181"	211"	270"	
49'	2	84"			181"	211"	270"	
51'	2	92"			193"	223"	282"	
54'	3	64"	144"		217"	247"	306"	
55'	3	64"	144"		217"	247"	306"	
57'	3	76"	156"		229"	259"	318"	
59'	3	84"	168"		241"	271"	330"	
60'	3	92"	180"		253"	283"	342"	
62'	3	92"	188"		265"	295"	354"	
63'	3	92"	188"		265"	295"	354"	
66'	3	92"	204"		289"	319"	378"	
68'	3	92"	212"		301"	331"	390"	
69'	3	92"	212"		301"	331"	390"	
72'	3	92"	228"		325"	355"	414"	
75'	3	92"	236"		337"	367"	426"	
78'	4	92"	212"	288"	361"	391"	450"	
80'	4	92"	220"	300"	373"	403"	462"	
81'	4	92"	220"	300"	373"	403"	462"	
84'	4	92"	236"	324"	397"	427"	486"	
87'	4	92"	236"	332"	409"	439"	498"	
88'	4	92"	236"	340"	421"	451"	510"	
90'	4	92"	236"	348"	433"	463"	522"	
91'	4	92"	236"	348"	433"	463"	522"	
92'	4	92"	236"	356"	445"	475"	534"	
95'	4	92"	236"	364"	457"	487"	546"	
98'	4	92"	236"	380"	481"	511"	570"	
105'	5	92"	236"	372"	469"	499"		608"
113'	5	92"	236"	380"	481"	511"		656"
120'	5	92"	236"	380"	481"	511"		704"

3. CAPACITIES AND SPECIFICATIONS

Electrical controls and wiring should be installed by a qualified electrician. The motor disconnect switches and conductor cables should comply with the National Electrical code and any local codes which apply. Reset and motor starting stations should be located so the operator can see that all personnel are clear of the equipment.

A. Use the chart below to determine the horsepower required.

Bin	12" SERIES II SWEEP					16" SERIES II SWEEP				
	Drive	Bushel/MT Per Hour Horsepower			Length	Drive	Bushel/MT Per Hour Horsepower			Length
Diameter	H.P.	5000/125	6000/155	7000/180	Pivot to End	H.P.	8000/205	9000/230	10000/255	Pivot to End
36'	1	7.5	7.5	7.5	16.79' (5.12m)	2	7.5	7.5	7.5	16.85' (5.14m)
37'	1	7.5	7.5	7.5	17.79' (5.43m)	2	7.5	7.5	7.5	16.85' (5.14m)
39'	1	7.5	7.5	7.5	18.79' (5.73m)	2	7.5	7.5	7.5	17.85' (5.44m)
40'	1	7.5	7.5	7.5	18.79' (5.73m)	2	7.5	7.5	7.5	18.75' (5.72m)
42'	1	7.5	7.5	7.5	19.79' (6.04m)	2	7.5	7.5	10	19.85' (6.05m)
43'	1	7.5	7.5	7.5	20.79' (6.34m)	2	7.5	7.5	10	19.85' (6.05m)
45'	1	7.5	7.5	7.5	20.79' (6.34m)	2	7.5	7.5	10	20.85' (6.36m)
48'	1	7.5	7.5	7.5	22.79' (6.95m)	2	7.5	10	10	22.85' (6.96m)
49'	1	7.5	7.5	7.5	22.79' (6.95m)	2	7.5	10	10	22.85' (6.96m)
51'	1	7.5	7.5	10	23.79' (7.26m)	2	7.5	10	10	23.85' (7.27m)
54'	1	7.5	7.5	10	25.79' (7.86m)	2	10	10	10	25.85' (7.88m)
55'	1	7.5	7.5	10	25.79' (7.86m)	2	10	10	10	25.85' (7.88m)
57'	1	7.5	7.5	10	26.79' (8.17m)	2	10	10	10	26.85' (8.18m)
59'	1	7.5	7.5	10	27.79' (8.47m)	2	10	10	15	27.85' (8.49m)
60'	1	7.5	7.5	10	28.79' (8.78m)	2	10	10	15	28.85' (8.79m)
62'	2	7.5	7.5	10	29.79' (9.08m)	2	10	10	15	29.85' (9.10m)
63'	2	7.5	7.5	10	29.79' (9.08m)	2	10	10	15	29.85' (9.10m)
66'	2	7.5	7.5	10	31.79' (9.69m)	2	10	15	15	31.85' (9.71m)
68'	2	7.5	7.5	10	32.79' (10.00m)	2	10	15	15	32.85' (10.01m)
69'	2	7.5	7.5	10	32.79' (10.00m)	2	10	15	15	32.85' (10.01m)
72'	2	7.5	7.5	10	34.79' (10.61m)	2	15	15	15	34.85' (10.62m)
75'	2	10	10	10	35.79' (10.91m)	2	15	15	15	35.85' (10.93m)
78'	2	10	10	10	37.79' (11.52m)	2	15	15	15	37.85' (11.54m)
80'	2	10	10	10	38.79' (11.83m)	2	15	15	15	38.85' (11.84m)
81'	2	10	10	10	38.79' (11.83m)	2	15	15	15	38.85' (11.84m)
84'	2	10	10	15	40.79' (12.44m)	2	15	15	15	40.85' (12.45m)
87'	2	10	10	15	41.79' (12.74m)	2	15	15	20	41.85' (12.76m)
88'	2	10	10	15	42.79' (13.05m)	2	15	15	20	42.85' (13.06m)
90'	2	10	10	15	43.79' (13.35m)	2	15	15	20	43.85' (13.37m)
91'	2	10	10	15	43.79' (13.35m)	2	15	15	20	43.85' (13.37m)
92'	2	10	10	15	44.79' (13.66m)	2	15	20	20	44.85' (13.67m)
95'	2	10	15	15	45.79' (13.97m)	2	15	20	20	45.85' (13.98m)
98'	2	10	15	15	47.79' (14.57m)	2	15	20	20	47.85' (14.58m)
105'	3	15	15	20	50.79' (15.48m)	3	20	20	20	50.85' (15.50m)
113'	3	15	15	20	54.79' (16.70m)	3	20	20	20	54.85' (16.72m)
120'	3	15	15	20	58.79' (17.92m)	3	20	20	20	58.85' (17.94m)

Due to continual improvements, GSI designs and specifications are subject to change without notice.

The horsepower recommendations are for augering reasonably dry grain. High moisture grain (greater than 15%) will require greater power for maximum capacity. The maximum capacity will be less with high moisture grain than with dry grain.

ALSO NOTE: Sweep drive and carrier wheels require plates or track over aeration flooring for travel and supports not supplied with the sweep unit. Contact your installer or flooring provider for possible source and details.

3. CAPACITIES AND SPECIFICATIONS (CONT.)

B. A magnetic starter should be used to protect the motor when starting and stopping. It should stop the motor in case of power interruption, conductor fault, low voltage, circuit interruption or motor over load. The motor must be restarted manually. Some motors have built-in thermal overload protection. If this is the type of motor being used, use only those with a manual reset.

C. The motor starting controls must be located outside the bin. They must NEVER be installed on the Series II auger inside the bin.

D. Disconnect and lockout the power before resetting motor overloads.

E. Disconnect and lockout the power before entering the bin.

F. Disconnect and lockout the power before servicing the equipment.

G. Position the reset and motor starting controls so that the operators have full view of the equipment

There should ALWAYS be two (2) people in the work area.

H. Make sure electric motors are grounded.

A main power disconnect switch capable of being locked only in the OFF position should be used. It should be locked whenever work is being done on the Series II Sweep.

1. BACK SHIELD ASSEMBLY

A. The sweep has been broken down into four(4) different section types. The head section, intermediate section, tail, and extension section.

Use the charts below to determine the number of sections and the section sizes required for the length of sweep to be used.

12" Series II Sweep Sections

Bin Dia.	Sec.	Head	Int.	Int.	Int.	Tail	Ext.	Pivot to End
36'	2	52				149.5		16.79'
37'	2	64				149.5		17.79'
39'	2	76				149.5		18.79'
40'	2	76				149.5		18.79'
42'	2	88				149.5		19.79'
43'	2	100				149.5		20.79'
45'	2	100				149.5		20.79'
48'	2	124				149.5		22.79'
49'	2	124				149.5		22.79'
51'	2	136				149.5		23.79'
54'	3	100	60			149.5		25.79'
55'	3	100	60			149.5		25.79'
57'	3	112	60			149.5		26.79'
59'	3	124	60			149.5		27.79'
60'	3	136	60			149.5		28.79'
62'	3	136	72			149.5		29.79'
63'	3	136	72			149.5		29.79'
66'	3	136	96			149.5		31.79'
68'	3	136	108			149.5		32.79'
69'	3	136	108			149.5		32.79'
72'	3	136	132			149.5		34.79'
75'	4	136	144	60		149.5		40.79'
78'	4	136	108	60		149.5		37.79'
80'	4	136	120	60		149.5		38.79'
81'	4	136	120	60		149.5		38.79'
84'	4	136	144	60		149.5		40.79'
87'	4	136	144	72		149.5		41.79'
88'	4	136	144	84		149.5		42.79'
90'	4	136	144	96		149.5		43.79'
91'	4	136	144	96		149.5		43.79'
92'	4	136	144	108		149.5		44.79'
95'	4	136	144	120		149.5		45.79'
98'	4	136	144	144		149.5		47.79'
105'	5	136	144	132		144	53.5	50.79'
113'	5	136	144	144		144	89.5	54.79'
120'	5	136	144	144		144	137.5	58.79'

16" Series II Sweep Sections

Bin Dia.	Sec.	Head	Int.	Int.	Int.	Tail	Ext.	Pivot to End
36'	2	52				150.25		16.85'
37'	2	52				150.25		16.85'
39'	2	64				150.25		17.85'
40'	2	76				150.25		18.85'
42'	2	88				150.25		19.85'
43'	2	88				150.25		19.85'
45'	2	100				150.25		20.85'
48'	2	124				150.25		22.85'
49'	2	124				150.25		22.85'
51'	2	136				150.25		23.85'
54'	3	100	60			150.25		25.85'
55'	3	100	60			150.25		25.85'
57'	3	112	60			150.25		26.85'
59'	3	124	60			150.25		27.85'
60'	3	136	60			150.25		28.85'
62'	3	136	72			150.25		29.85'
63'	3	136	72			150.25		29.85'
66'	3	136	96			150.25		31.85'
68'	3	136	108			150.25		32.85'
69'	3	136	108			150.25		32.85'
72'	3	136	132			150.25		34.85'
75'	4	136	144	60		150.25		40.85'
78'	4	136	108	60		150.25		37.85'
80'	4	136	120	60		150.25		38.85'
81'	4	136	120	60		150.25		38.85'
84'	4	136	144	60		150.25		40.85'
87'	4	136	144	72		150.25		41.85'
88'	4	136	144	84		150.25		42.85'
90'	4	136	144	96		150.25		43.85'
91'	4	136	144	96		150.25		43.85'
92'	4	136	144	108		150.25		44.85'
95'	4	136	144	120		150.25		45.85'
98'	4	136	144	144		150.25		47.85'
105'	5	136	144	132		144	54.25	50.85'
113'	5	136	144	144		144	90.25	54.85'
120'	5	136	144	144		144	138.25	58.85'

The section sizes are total length given in inches. The head section has 8" subtracted from the shield length due to the pivot pipe location.
The 12" tail section has 5-1/2" added to the shield length due to the end shaft length.
The 16" tail section has 6-1/4" added to the shield length due to the end shaft length.

1. BACK SHIELD ASSEMBLY (CONT.)

B. ***(All 16" Models and 12" Models with extensions)*** Assemble the caster assembly using the 1/2" x 3-1/2" clevis pin and 1/8" pin clip.

C. Attach the end caster assembly to the end of the tail section using two (2) 1"-8 hex nuts.

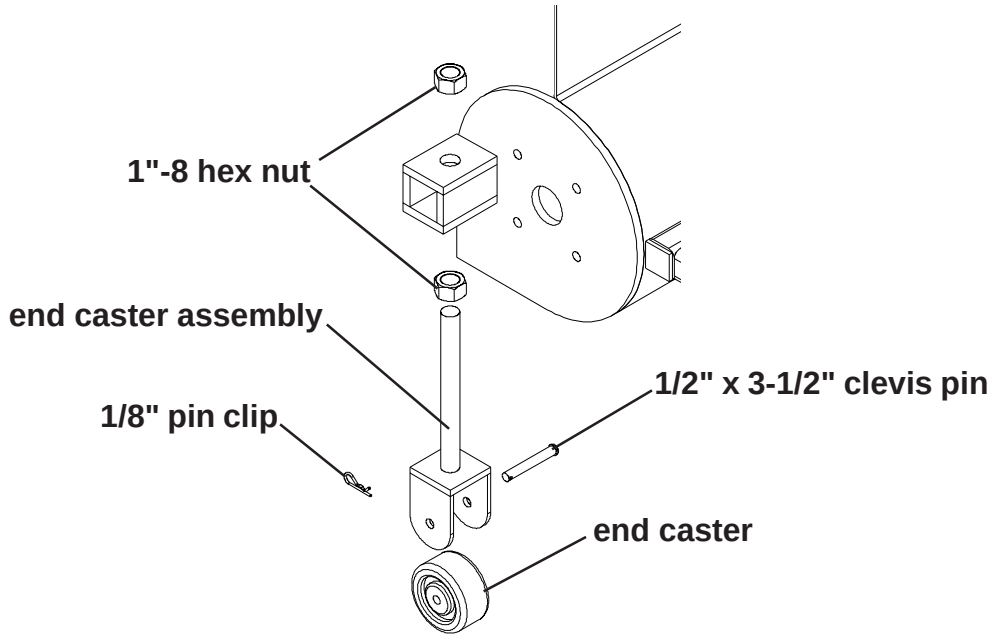

FIG. 1-C

D. Use eight (8) 5/8"-11 x 1-3/4" grade 8 hex bolts, lock washers, and hex nuts at each section connection.

The bolts MUST be installed as shown below.

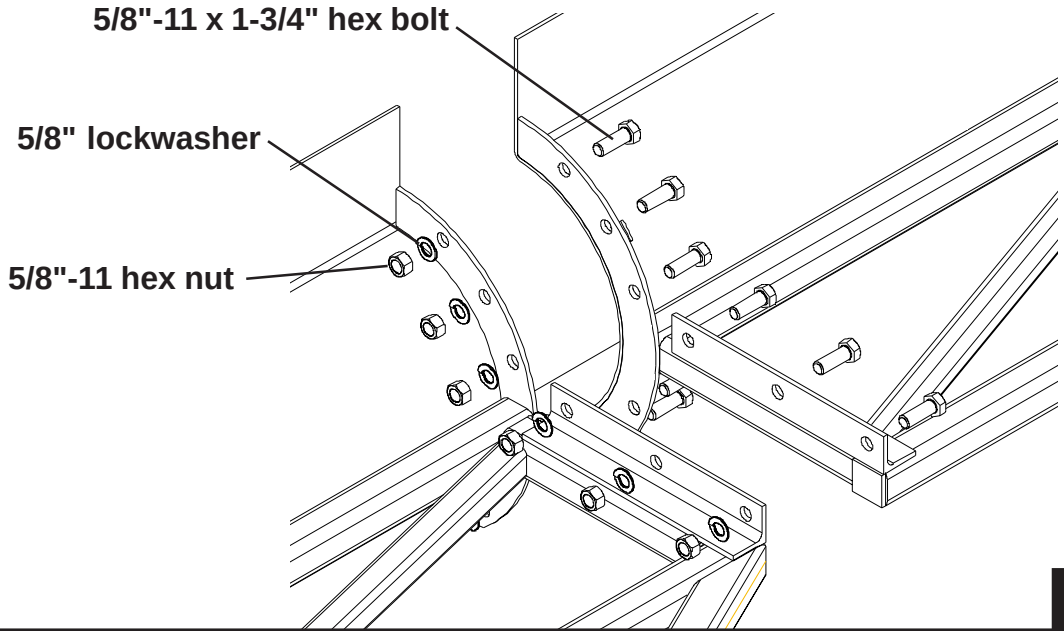

FIG. 1-D

2. FLIGHTING ASSEMBLY

A. Layout the flight sections in order of assembly starting with the head flight working towards the tail flight.

B. Using the connecting stubs, bolt the flight sections together with hex bolts and lock nuts. Make sure the flight ends are in time with each other.

12"	2" x 11 1/2" Connecting Stub Four (4) 5/8"-11 x 3 1/2" Hex Bolts
16"	3" x 13" Connecting Stub Four (4) 3/4"-10 x 5 1/2" Hex Bolts

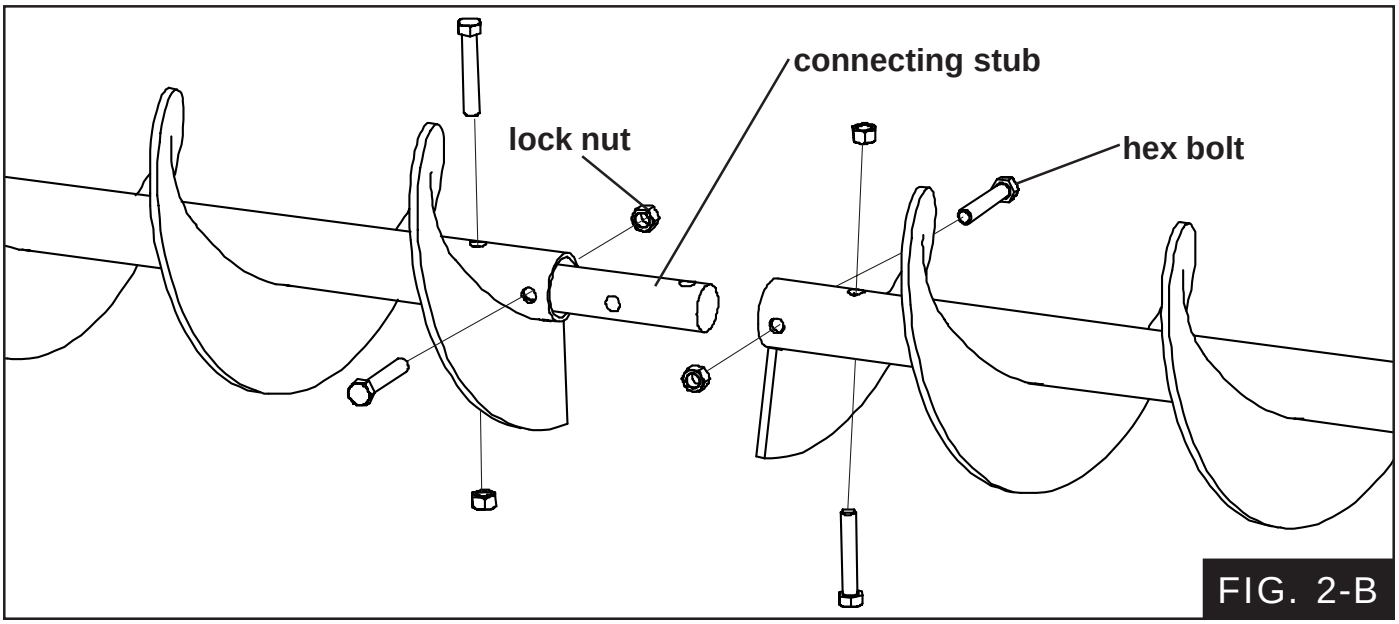

FIG. 2-B

C. Slide the end stub through the bearing plate on the tail section and into the tail flight securing it with hex bolts and lock nuts.

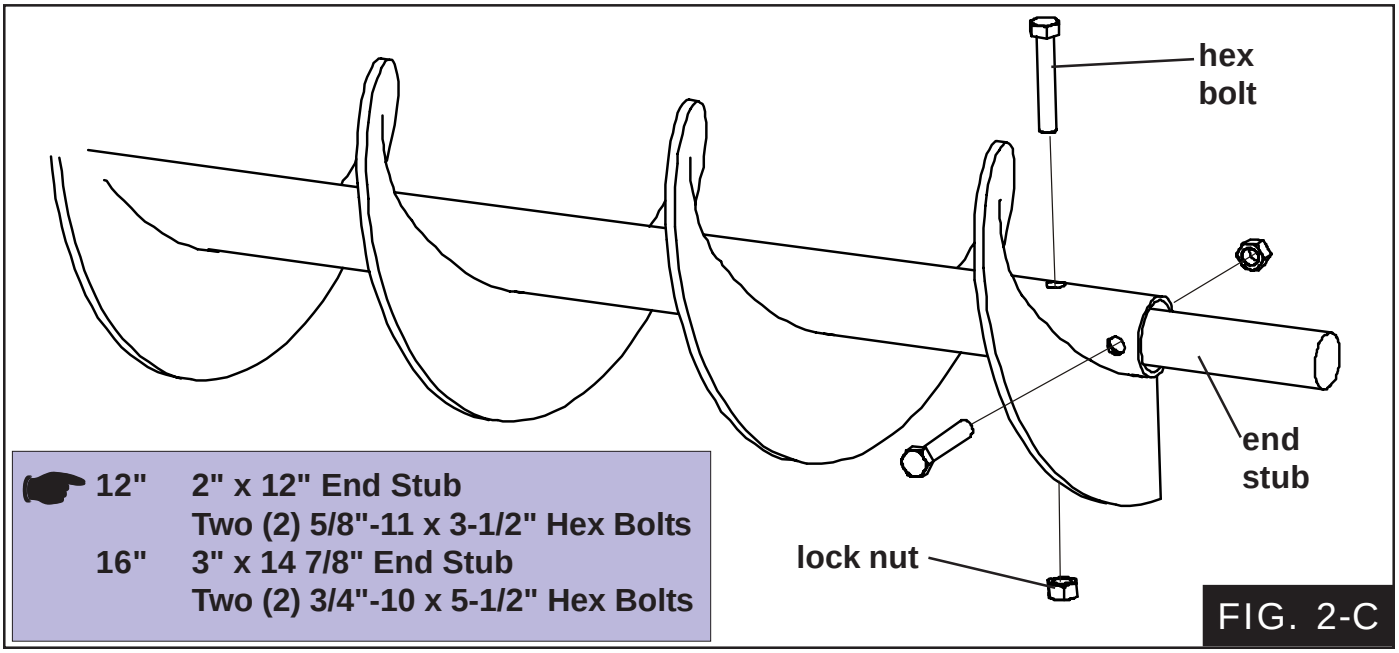

12"	2" x 12" End Stub Two (2) 5/8"-11 x 3-1/2" Hex Bolts
16"	3" x 14 7/8" End Stub Two (2) 3/4"-10 x 5-1/2" Hex Bolts

FIG. 2-C

3. HANGER BRACKET ASSEMBLY

A. Bolt the nylon bearings and hanger brackets to the connecting stubs using hex bolts, lockwashers, and hex nuts.

12" Two (2) 5/8"-11 x 2" Hex Bolts
16" Two (2) 1/2"-13 x 2 1/4" Hex Bolts

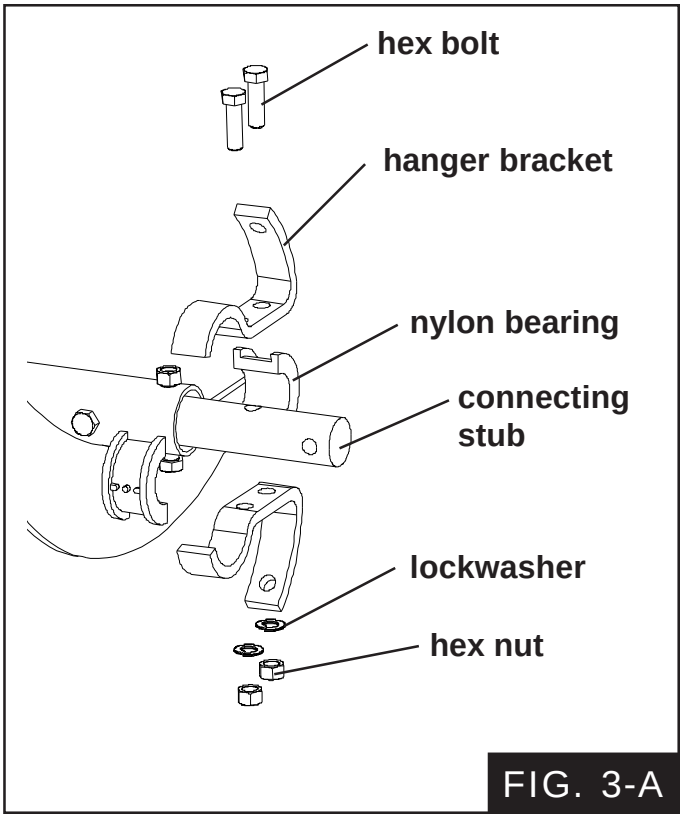

FIG. 3-A

B. Bolt the hanger brackets to the back shields using two (2) 5/8"-11 x 2" hex bolts, two (2) square washers, two (2) lockwashers, and two (2) hex nuts.

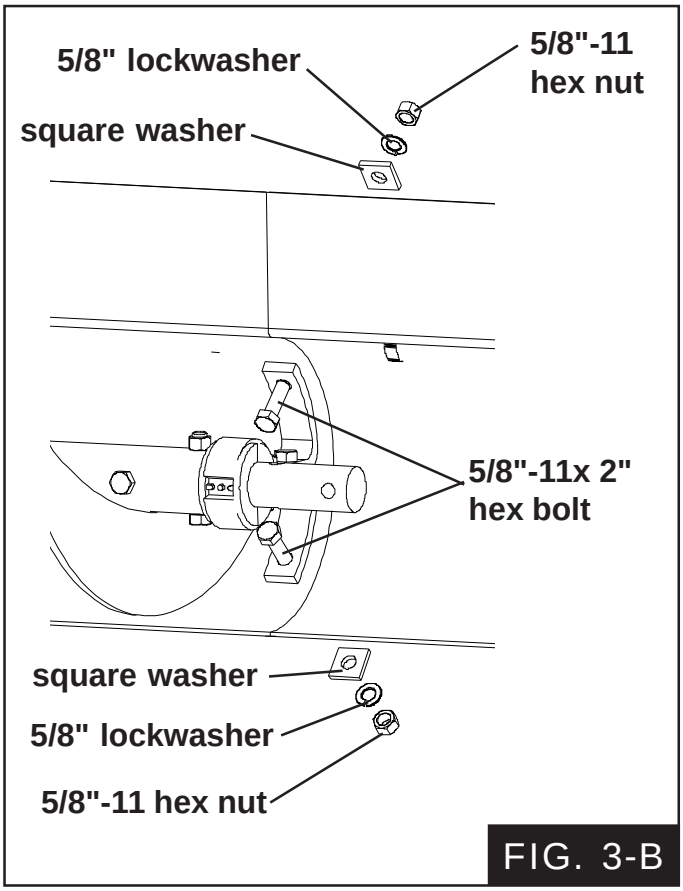

FIG. 3-B

4. FLANGE BEARING ASSEMBLY

A. Slide the flange bearing onto the end stub and bolt it to the end plate using hex bolts, lockwashers, and hex nuts.

12" Sweep 2" Flange Bearing
Four (4) 1/2"-13 x 2-1/2" Hex Bolts
16" Sweep 3" Flange Bearing
Four (4) 3/4"-10 x 3-1/2" Hex Bolts

Do not tighten the set screws on the bearing at this time. This can be done after the gear reducer is installed.

Caster assembly only used on all 16" sweeps & 12" sweeps with extensions.

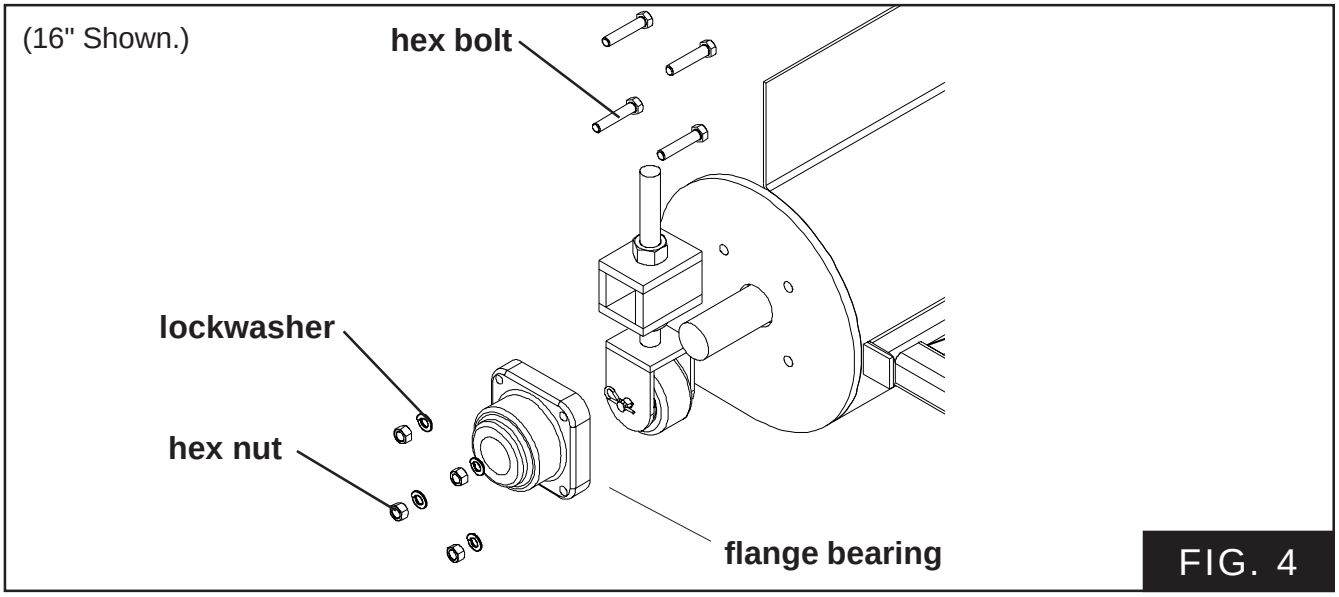

FIG. 4

5. GEAR REDUCER ASSEMBLY

A. Slide the output shaft of the reducer through the end plate of the head section and into the end of the head flight and secure it the shafts with hex bolts and lock nuts. (See Figure 5)

12" Two (2) 5/8"-11 x 3-1/2" Hex Bolts
16" Two (2) 3/4"-10 x 5-1/2" Hex Bolts

B. Bolt the reducer to the end plate of the head section using hex bolts, flat washers, & lockwashers, supplied with the reducer. (See Figure 5)

12" Four (4) 5/8"-11 x 2-1/2" Hex Bolts
16" Four (4) 3/4"-10 x 2-3/4" Hex Bolts

5. GEAR REDUCER ASSEMBLY (CONT.)

The input shaft of the reducer MUST be to the top of the reducer. Refer to the owner's manual supplied with the reducer for proper vent plug, fill plug, and drain plug locations.

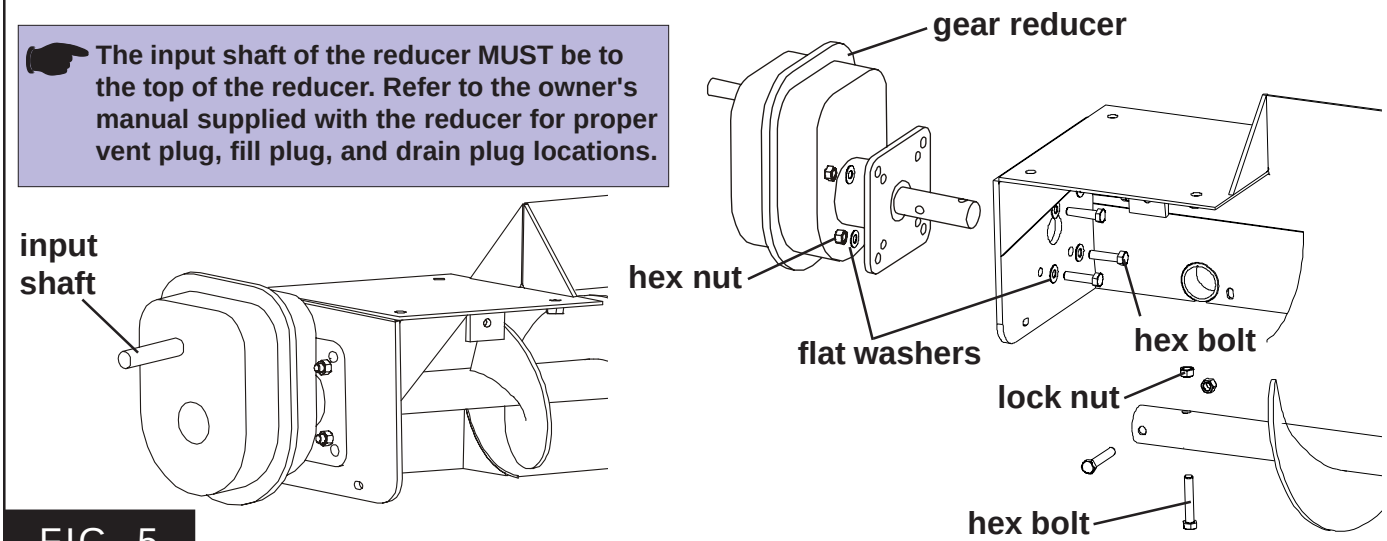

FIG. 5

The gear reducer is NOT filled with oil from the factory. For gear reducer specifications and oil fill recommendations, refer to the lubrication section of this manual.

6. DRIVE AXLE ASSEMBLY & BEARING SUPPORT

A. Loosen set screws on bearings.

B. Replace standard grease zerks with 90° grease zerks on both bearings. Make sure the 90° grease zerk is turned as shown in Fig. 6-B, so the zerks are accessible from the center of the tractor drive stand.

C. Slide the axle assembly between the legs of the tractor drive stand as shown in Fig 6-C.

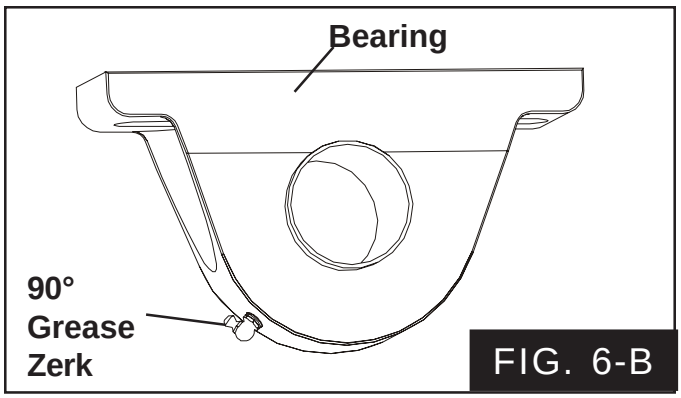

FIG. 6-B

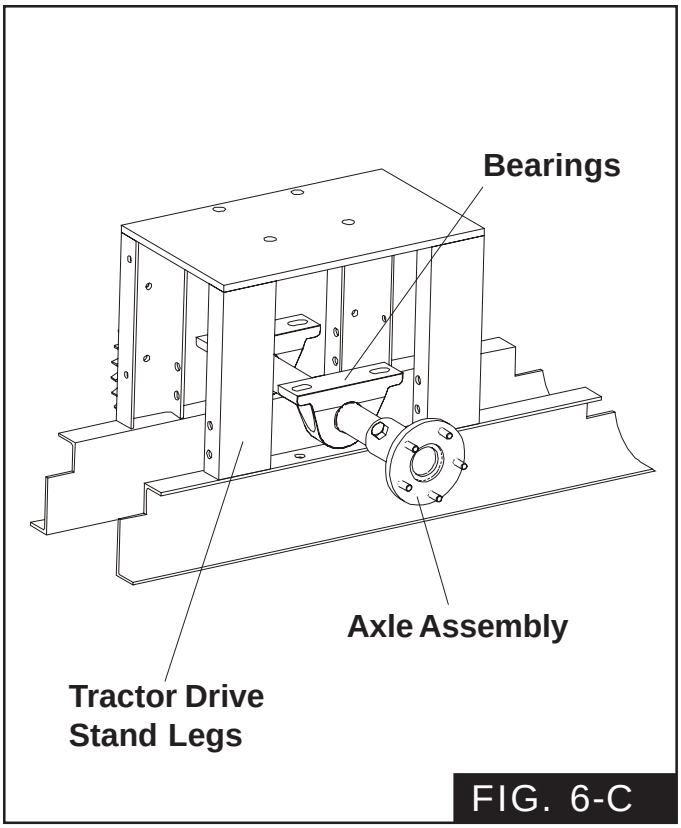

FIG. 6-C

6. DRIVE AXLE ASSEMBLY & BEARING SUPPORT (CONT.)

D. Rotate the pillow block bearings until the bases are facing up. (See Fig 6-C)

E. Bolt the bearing support brackets to the legs of the tractor drive stand using ½" x 1 ¾" bolts, ½" lock washers, ½" bevel washers, and ½" hex nuts. (See Fig. 6-E)

F. Attach pillow block bearings to the bearing brackets using 5/8" x 2 ½" bolts, 5/8" lock and flat washers, and 5/8" hex nuts. (See Fig 6-F)

G. Tighten set screws on pillow block bearings.

H. Tighten all hardware.

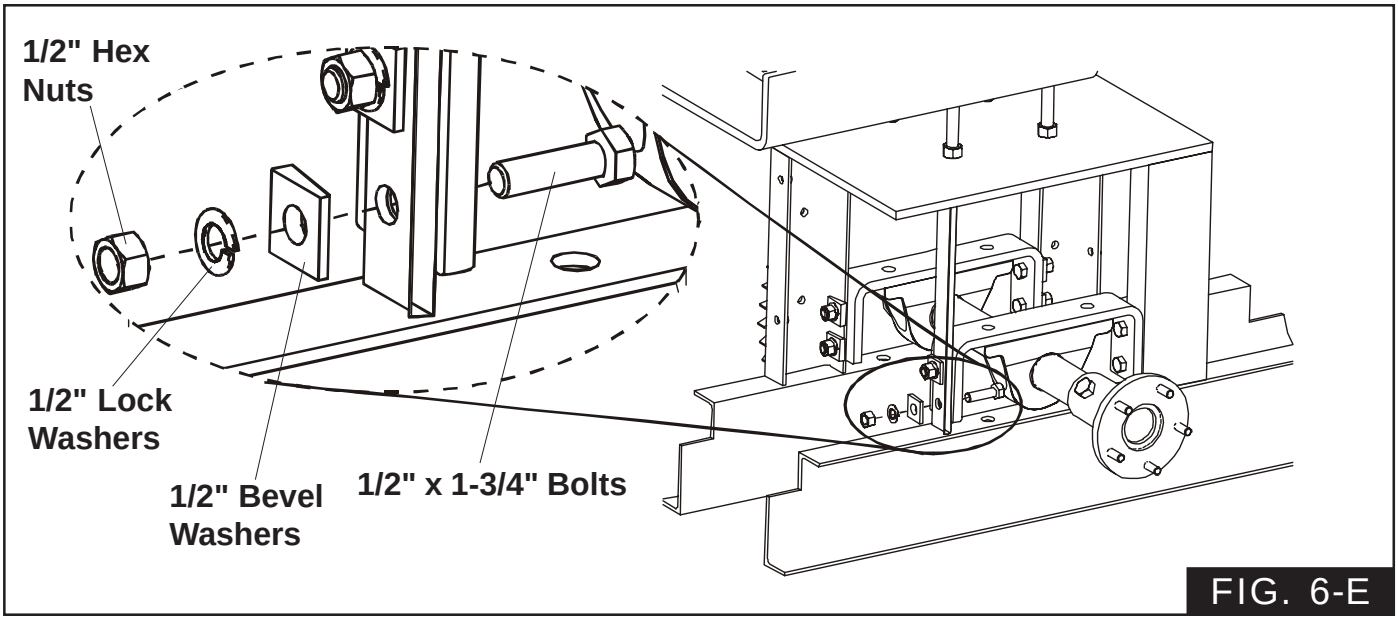

FIG. 6-E

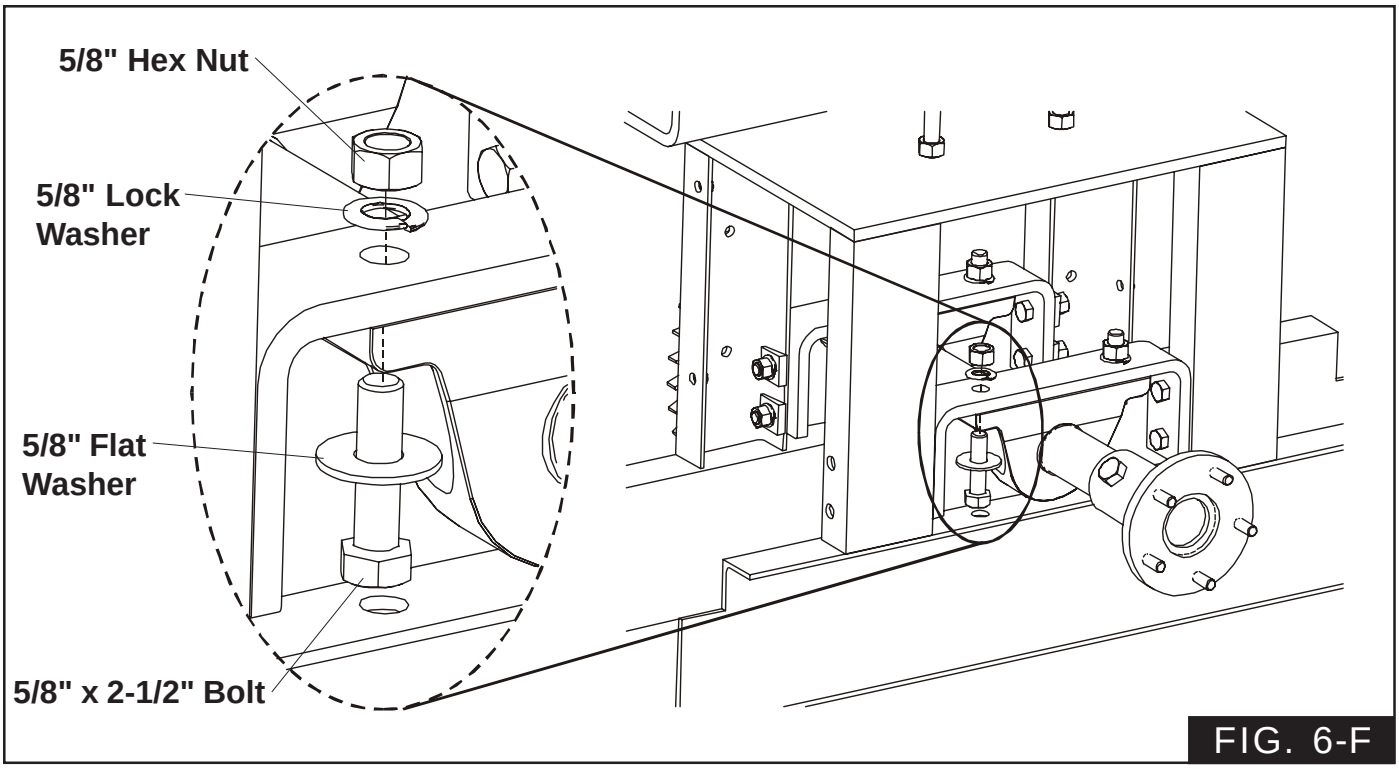

FIG. 6-F

7. INSTALL REDUCER MOUNTING PLATE & REDUCER

A. Attach the C-Face reducer to the mounting plate using four (4) 1/2"-13 x 1-1/4" hex bolts and lockwashers.

B. Fasten the mounting plate to the tail section plate using four (4) 5/8"-11 x 6" all-thread rods and sixteen (16) hex nuts. Adjust the mounting plate as close as possible to the tail section plate.

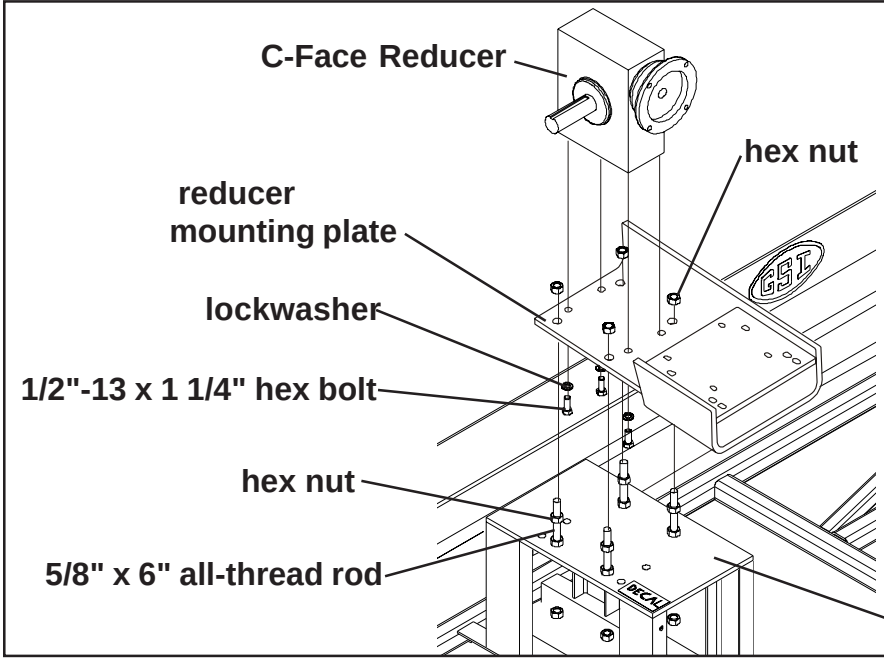

CAUTION

The gear reducer is NOT filled with oil from the factory. For gear reducer specifications and oil fill recommendations, refer to the owners manual supplied with the reducer or the lubrication information in the maintenance section of this manual.

FIG. 7

8-A. KEY ALIGNMENT

CAUTION

All keys should be parallel to the drive shaft. If the key is not straight (parallel) the gearbox quill sleave will crack.

THIS TYPE OF DAMAGE IS NOT COVERED BY WARRANTY.

1. Place key in keyway on drive shaft.

2. Make sure key is flat (parallel to drive shaft) in keyway as in Figure 8A-1 and 8A-2. **NOT** like Figure 8A-3.

3. Line up keyway on shaft with keyway on reducer and insert shaft into motor. (See Figure 8A-4 on page 30.)

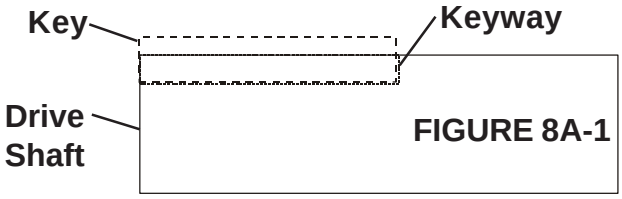

Key correctly positioned in a straight routed keyway. (Profiled keyway)

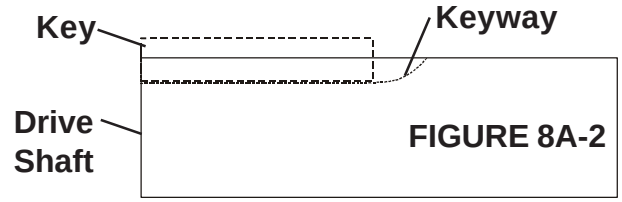

Key correctly positioned in a scalloped routed keyway. (Sled runner keyway)

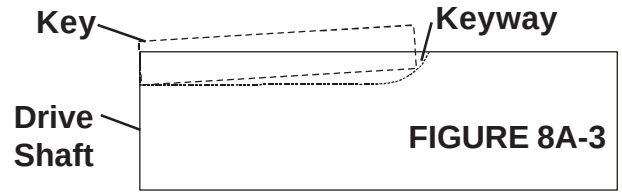

Key **INCORRECTLY** positioned in a scalloped routed keyway. **DO NOT** install key in this position.

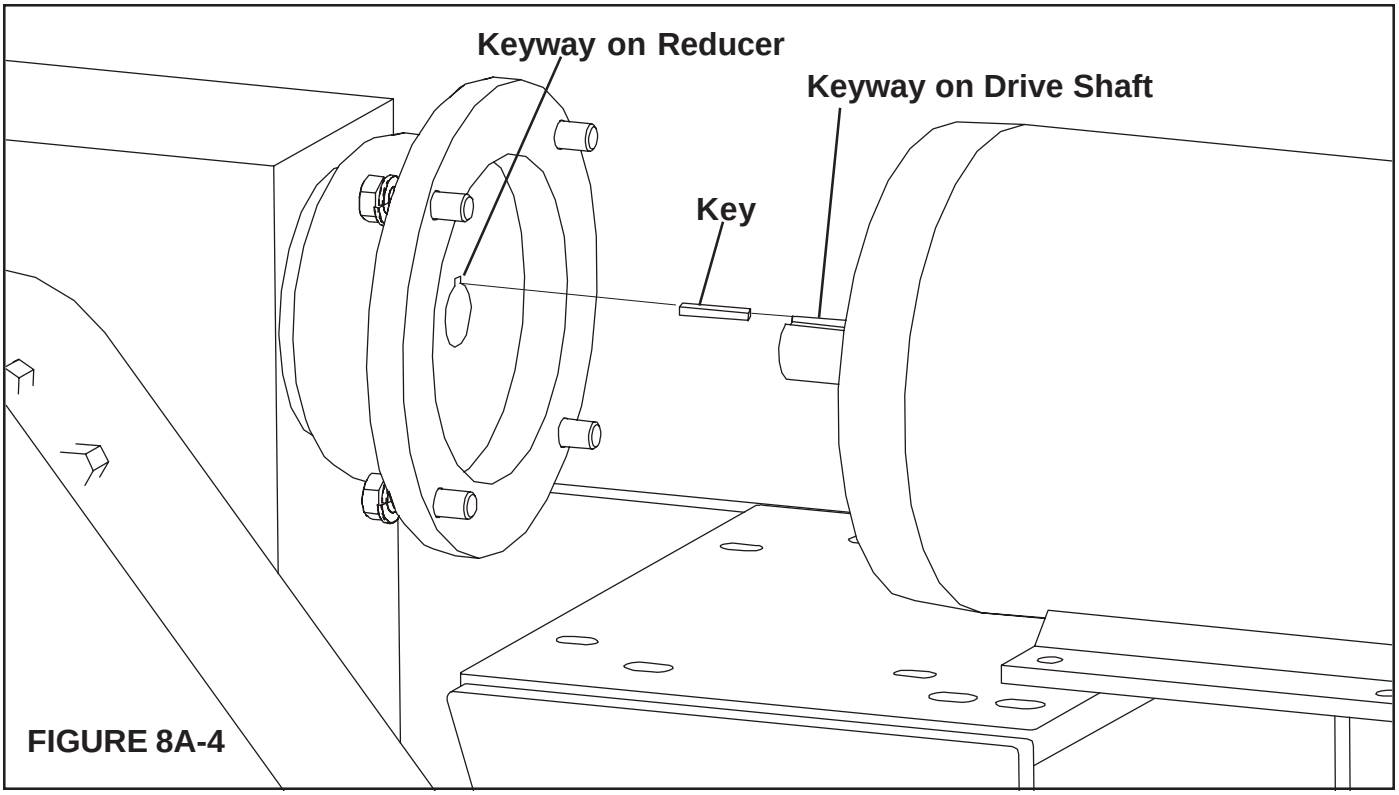

FIGURE 8A-4

8-B. INSTALL TRACTOR DRIVE MOTOR

A. Bolt the C-Face motor to the reducer using hex bolts, lockwashers, and a key. (See note below for bolt size.)

56C Frame	**Four (4) 3/8"-16 x 1 1/4"**	**Hex Bolts & 3/16" x 3/16" x 1"**	**Key**
143TC Frame	**Four (4) 3/8"-16 x 1 1/4"**	**Hex Bolts & 3/16" x 3/16" x 1"**	**Key**
182TC Frame	**Four (4) 1/2"-13 x 1 1/4"**	**Hex Bolts & 1/4" x 1/4" x 1"**	**Key**

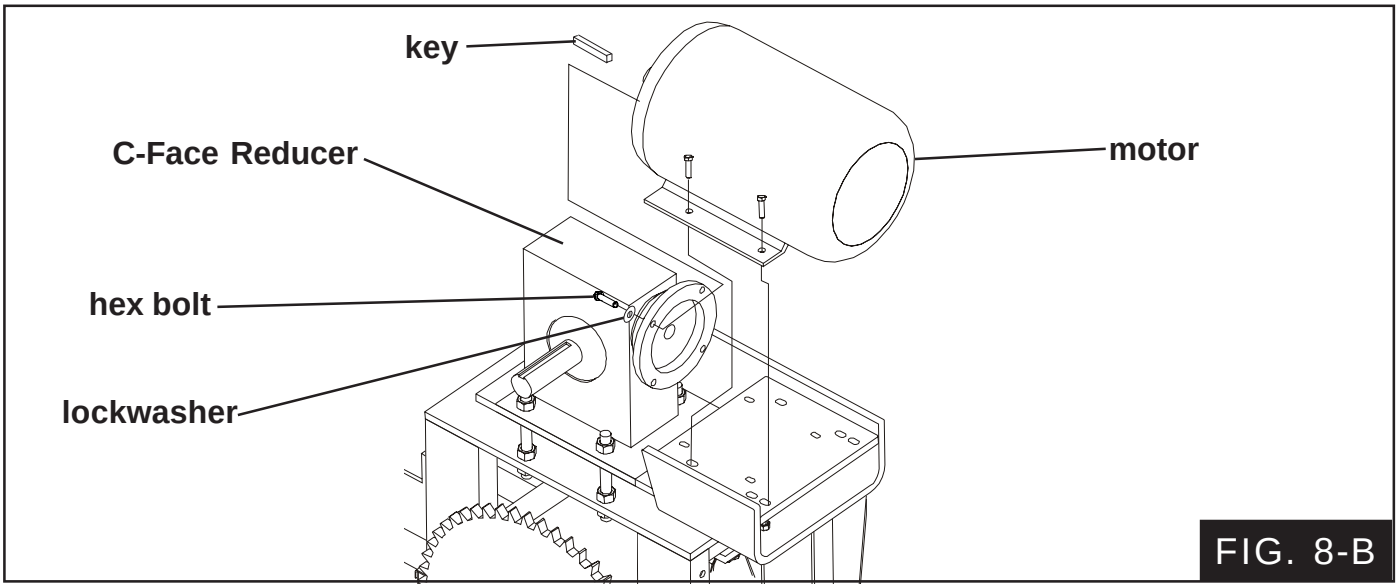

FIG. 8-B

9. GUARD ASSEMBLY

A. Slide the Chain Guard Top Seal (GC11978) over the Gear Reducer Output Shaft before installing any other components. Fig. TD1

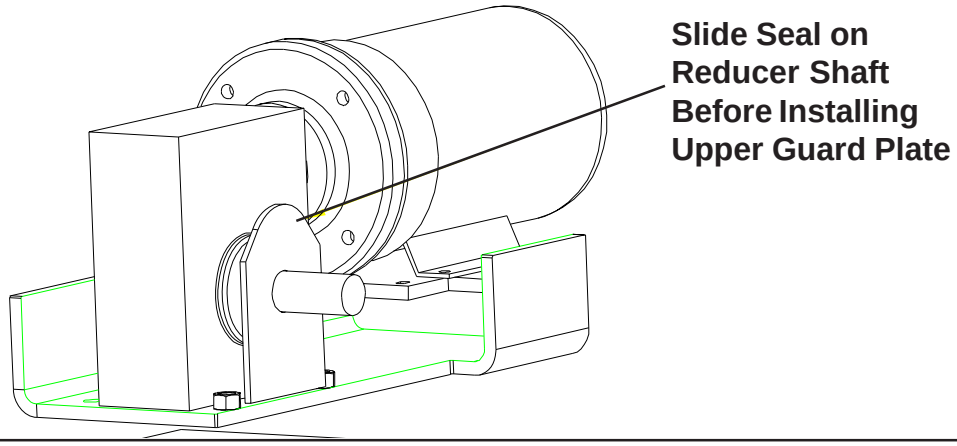

FIG. TD1

B. Attach the Guard Plate to the Tractor Drive Stand Legs using 3/8" bolts, lockwashers, and hex nuts before attaching the Drive Sprocket (See Fig TD2)

C. Remove the Wheel Hub Assembly on the sprocket side only

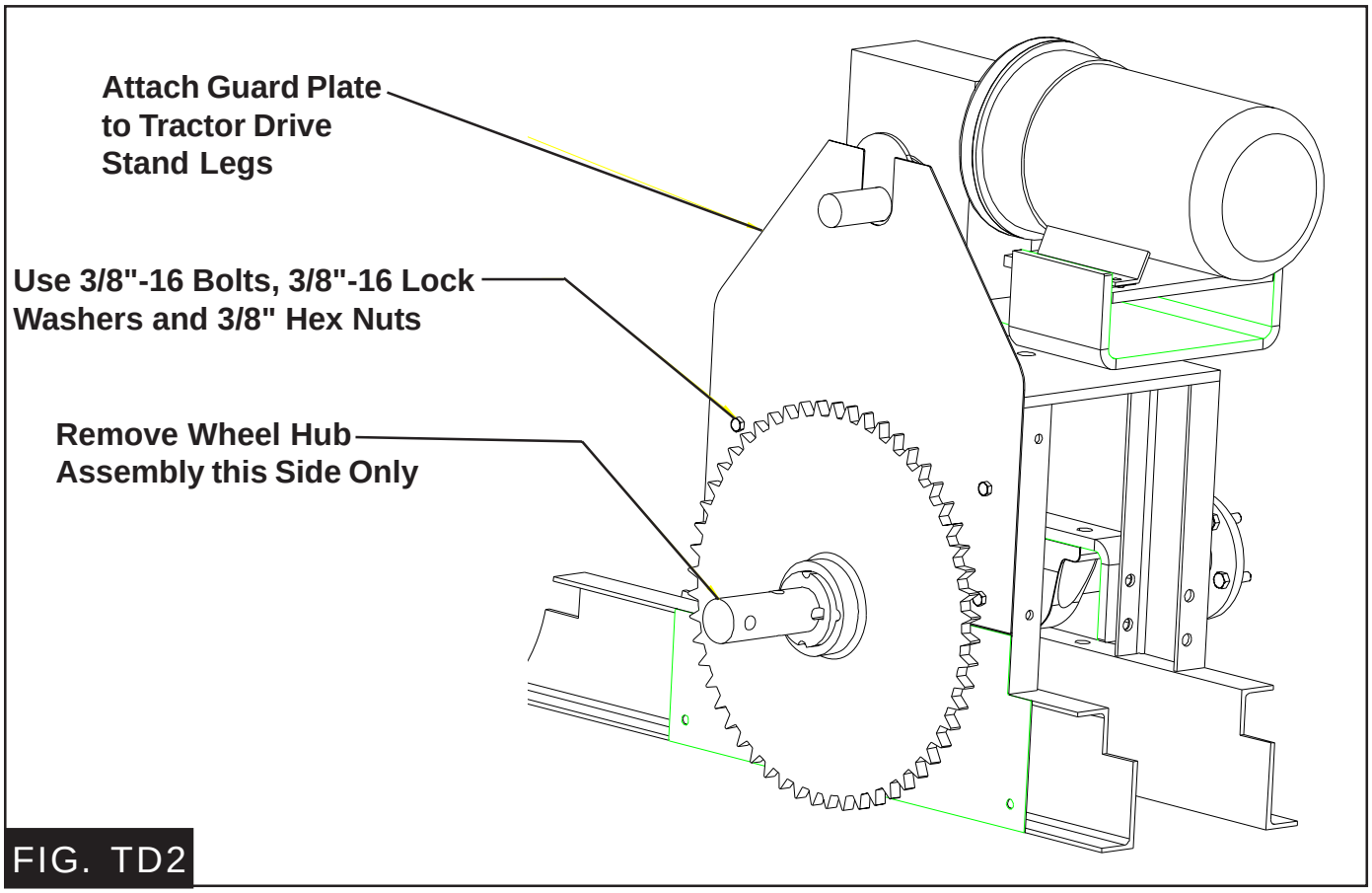

FIG. TD2

9. GUARD ASSEMBLY - (CONT.)

D. Slide the twelve tooth drive sprocket, bushing and key (see the key chart for your key size) onto the output shaft of the reducer, making sure both sprockets line up. (See Fig TD3 & TD4)

Wedging forces in the bushing saw slot, such as that exerted by a narrow edged regular screw driver, may damage or break the bushing. This damage would not be covered under the GSI Warranty

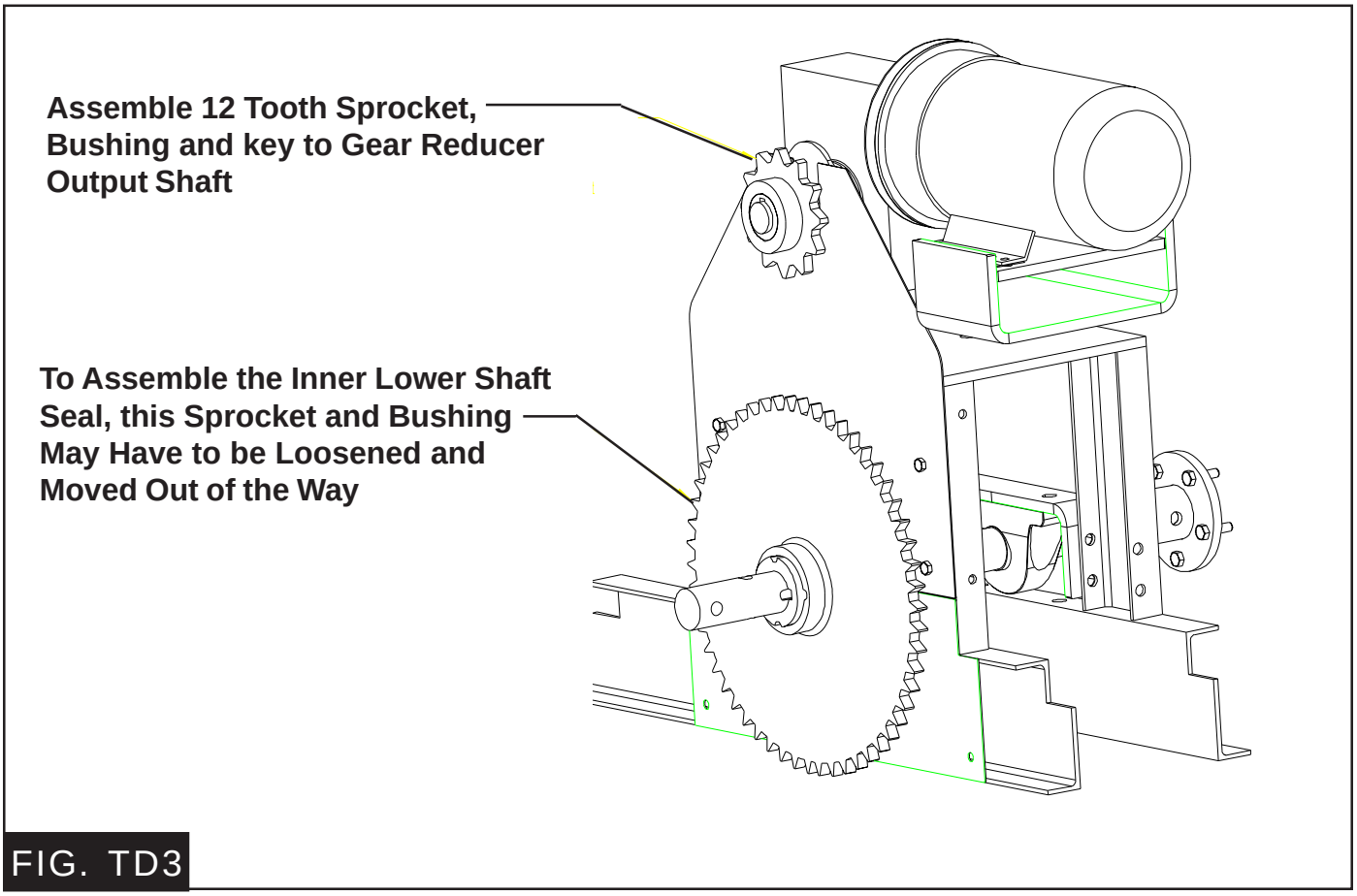

FIG. TD3

KEY CHART
1 HP - 5/16" x 2" Key
2 HP - 3/8" x 3-3/4" Key
3 HP - 3/8" x 3" Key

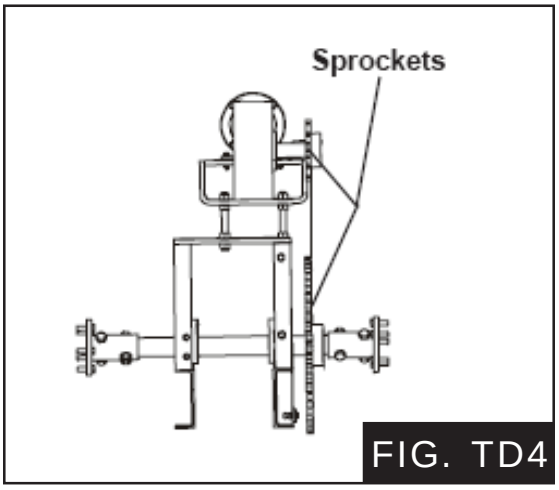

FIG. TD4

9. GUARD ASSEMBLY - (CONT.)

E. Slide the Dust Seal Clips over the studs welded to the Guard Plate, capturing the Upper Shaft Seal.

F. Lock the Dust Seal Clips into position by tightening the 3/8 hex nuts.

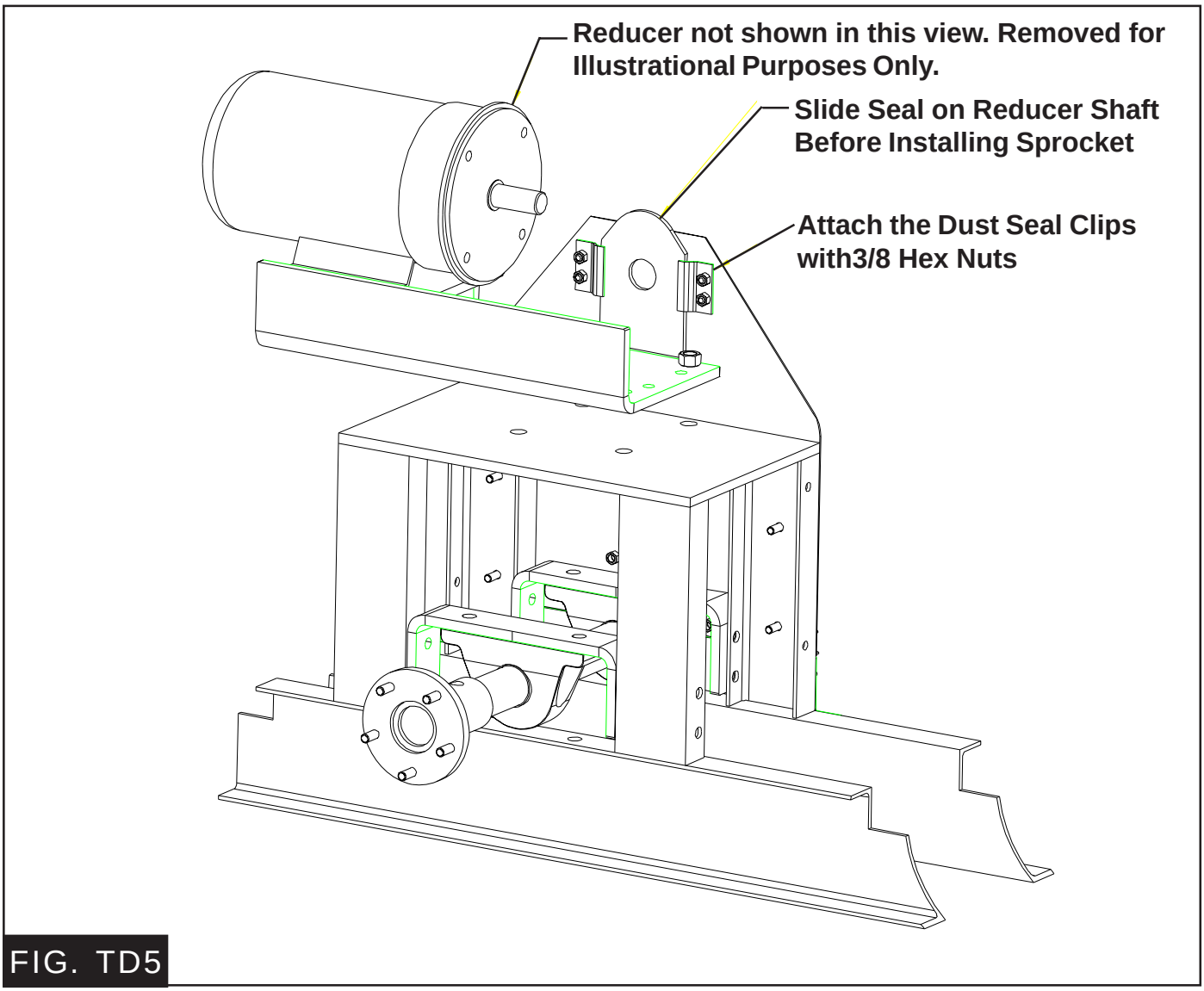

FIG. TD5

G. Attach the Inner Bottom Drive Shaft Seal (GC11974) to the Guard Plate using 3/8-16 x 1 1/4" bolts, hex nuts and flat washers. This seal is designed to fit tight around the Drive Axle Shaft. (See Figure TD6)

9. GUARD ASSEMBLY - (CONT.)

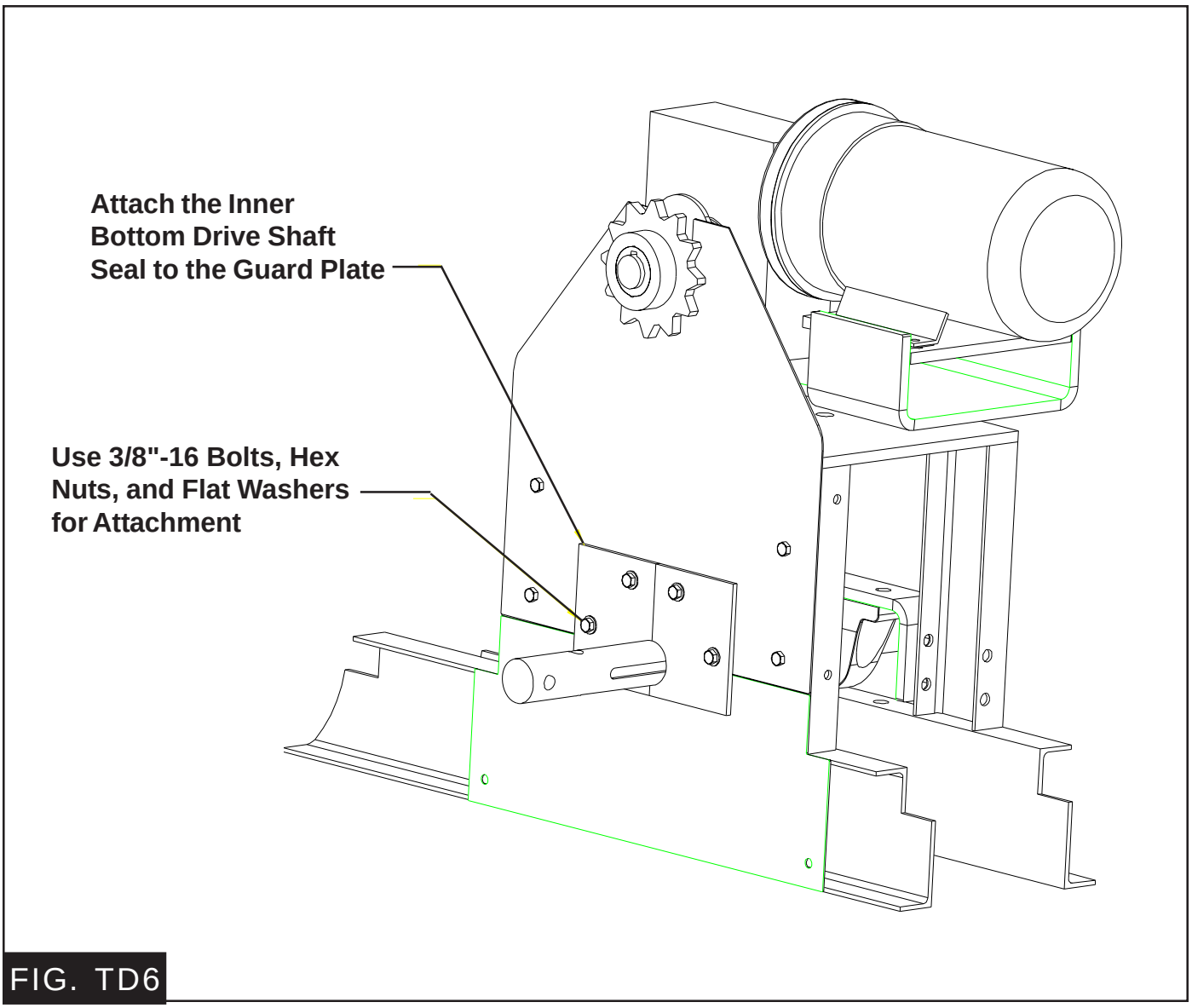

FIG. TD6

G. Move the Bottom Sprocket back into position and lock in place. Make sure the sprockets are lined up as in FIG TD4.

H. **Install the Chain**
Chain Tension-The chain should be installed fairly tight with only a small amount of slack. New chains will loosen up slightly as the joints seat themselves, causing initial elongation. After the first operation, it is advisable to tighten the chain.

I. Assemble the Bottom Chain Guard Trap to the Bottom Chain Guard Weldment using 1/2" x 3" HHCS bolts, 1/2" split lock washers and 1/2" hex nuts

J. Attach the Bottom Chain Guard Weldment to the Tractor Drive Stand using 3/8"-16 x 1 1/4" HHCS bolts, 3/8" split lock washers and 3/8"-16 hex nuts.

9. GUARD ASSEMBLY - (CONT.)

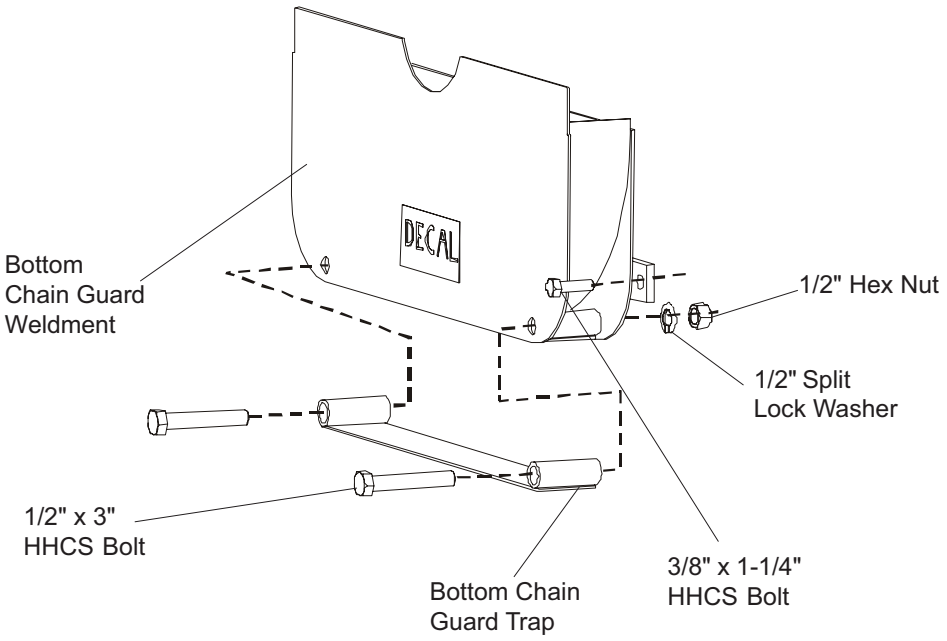

FIG. TD7

K. Attach the Top Chain Guard (GC11984) to the Tractor Drive Stand using 3/8"-16 x 1" bolts, 3/8" split lock washers and 3/8"-16 hex nuts.Attach the Top Chain Guard (GC11984) to the Tractor Drive Stand using 3/8"-16 x 1" bolts, 3/8" split lock washers and 3/8"-16 hex nuts.

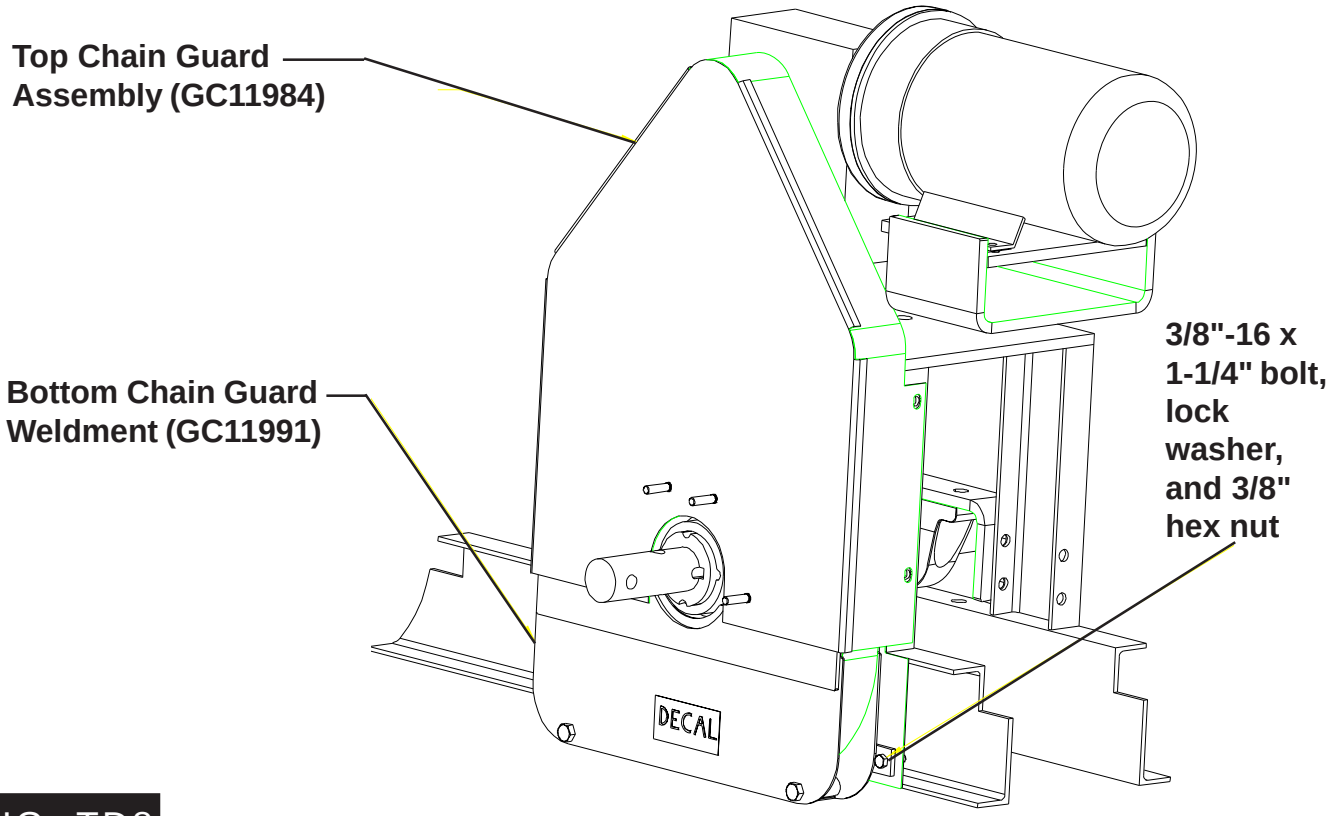

FIG. TD8

9. GUARD ASSEMBLY - (CONT.)

L. Reinstall the Wheel Hub Assembly that was removed during step #C above. Leave the inner bolt out until after the seals are put into place.

M. Slide the Inner Bottom Drive Shaft Seal (GC11986) halves over the studs welded to the Top Chain Guard.

N. Slide the Outer Bottom Drive Shaft Seal (GC11985) halves over the studs welded to the Top Chain Guard and on top of the Inner Bottom Drive Shaft Seal halves.

O. Lock the Bottom Drive Shaft Seals into position using 3/8" flat washers and 3/8"-16 hex nuts.

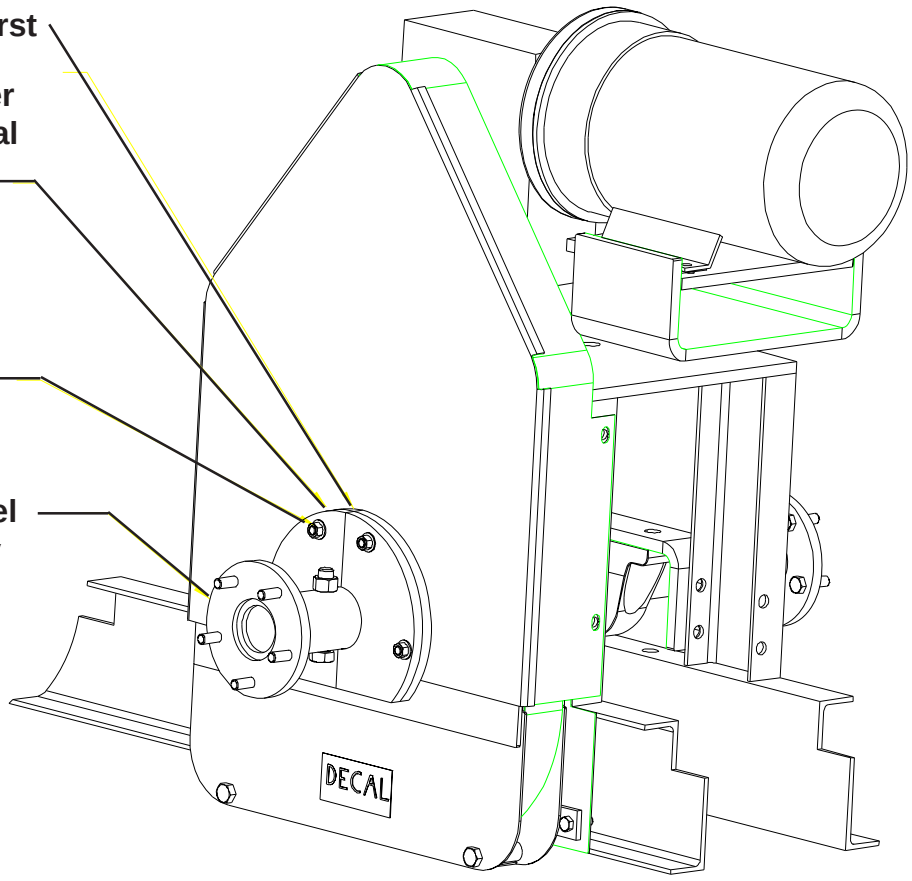

FIG. TD9

NOTES

10. TRACTOR WHEEL ASSEMBLY

A. Assemble the tires to the drive axle assembly using ten (10) 7/16" lockwashers, and hex nuts. (See Fig 10)

NOTE: Tires go on backwards as shown.

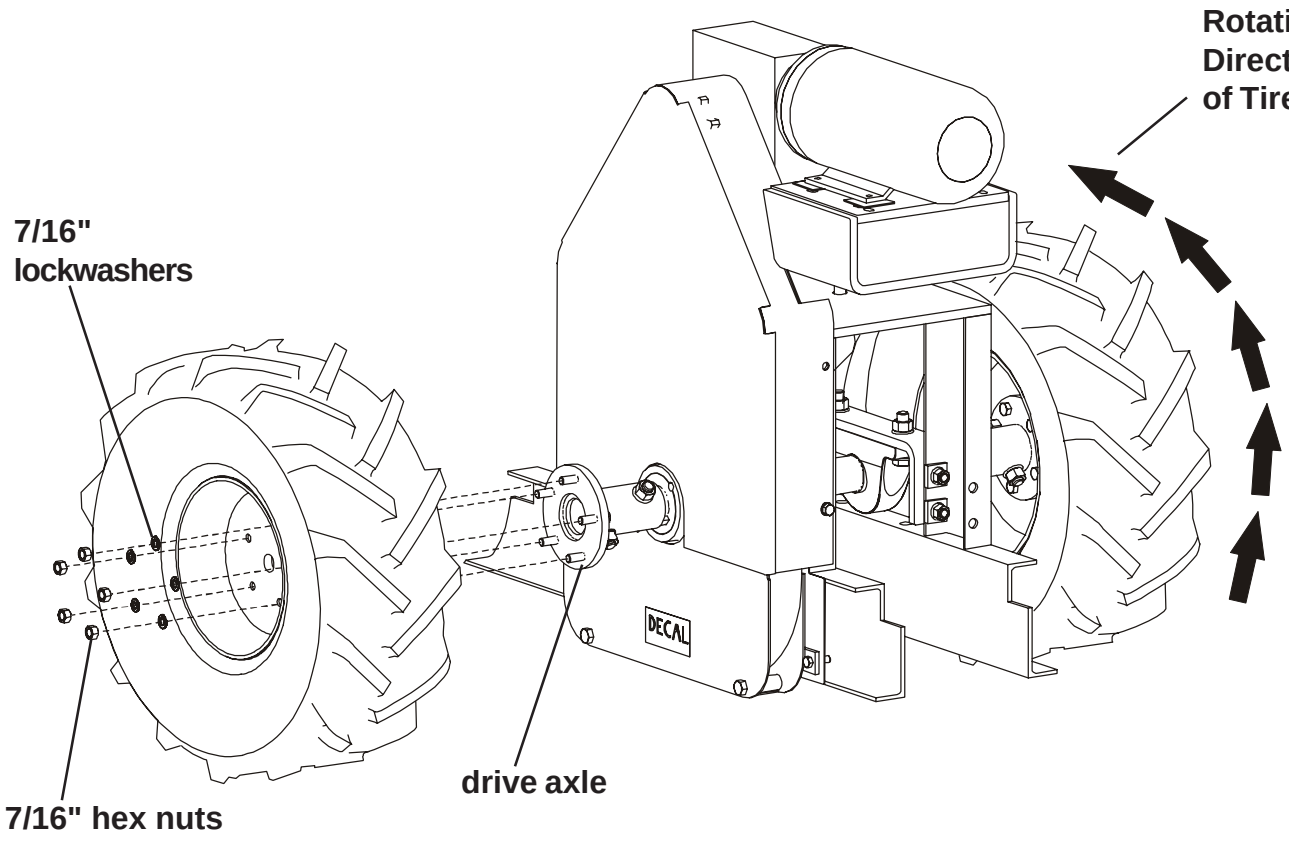

FIG. 10

11-A. COUNTER WEIGHT PLACEMENT

A. Place the equal number of counter weights each side of the drive assembly on the six inch (6") channels that are welded to the tail section.

Caution! Use proper lifting procedures and equipment when lifting counter weights (175 pounds each).

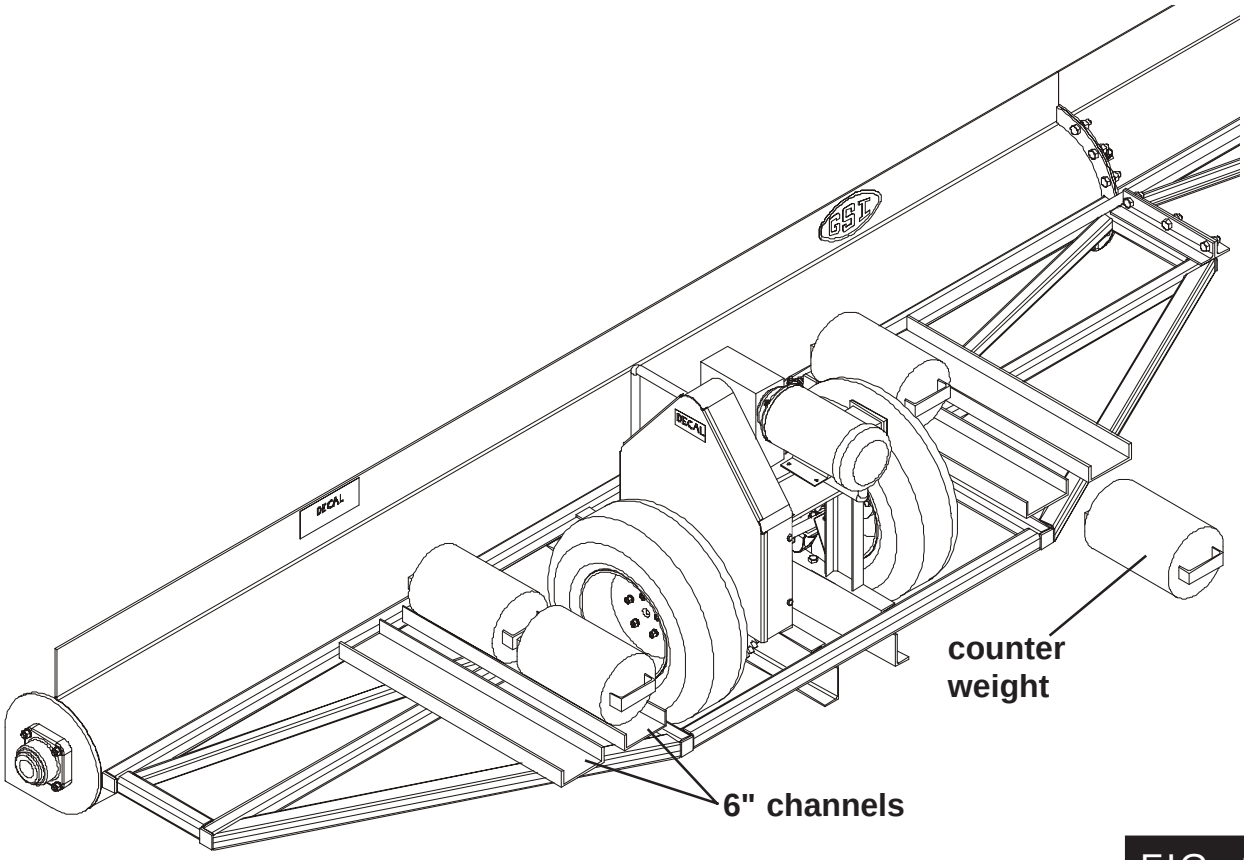

FIG. 11-A

11-B. CHANNEL EXTENSION KIT FOR SWEEPS USED IN 72' DIA. BINS & LARGER

A. 72' sweeps and larger need an extension kit installed.

B. Attach the center weight weldments to the adjustable center weight channel using eight (8) 1/2" x 1-1/4" bolts, split lockwashers, & hex nuts. The adjustable center weight has three sets of holes for the center weight weldments so you can adjust the weights accordingly. (See Fig. 11-B1)

C. Place assembly on top of the back tail section, around the tires. The end of the adjustable center weight should be placed under the tail frame. (See Fig. 11-B2)

D. Fasten assembly to tail section using two (2) 3/8" x 2-7/16" u-bolts, four (4) 3/8" lockwashers, & four (4) 3/8" hex nuts.

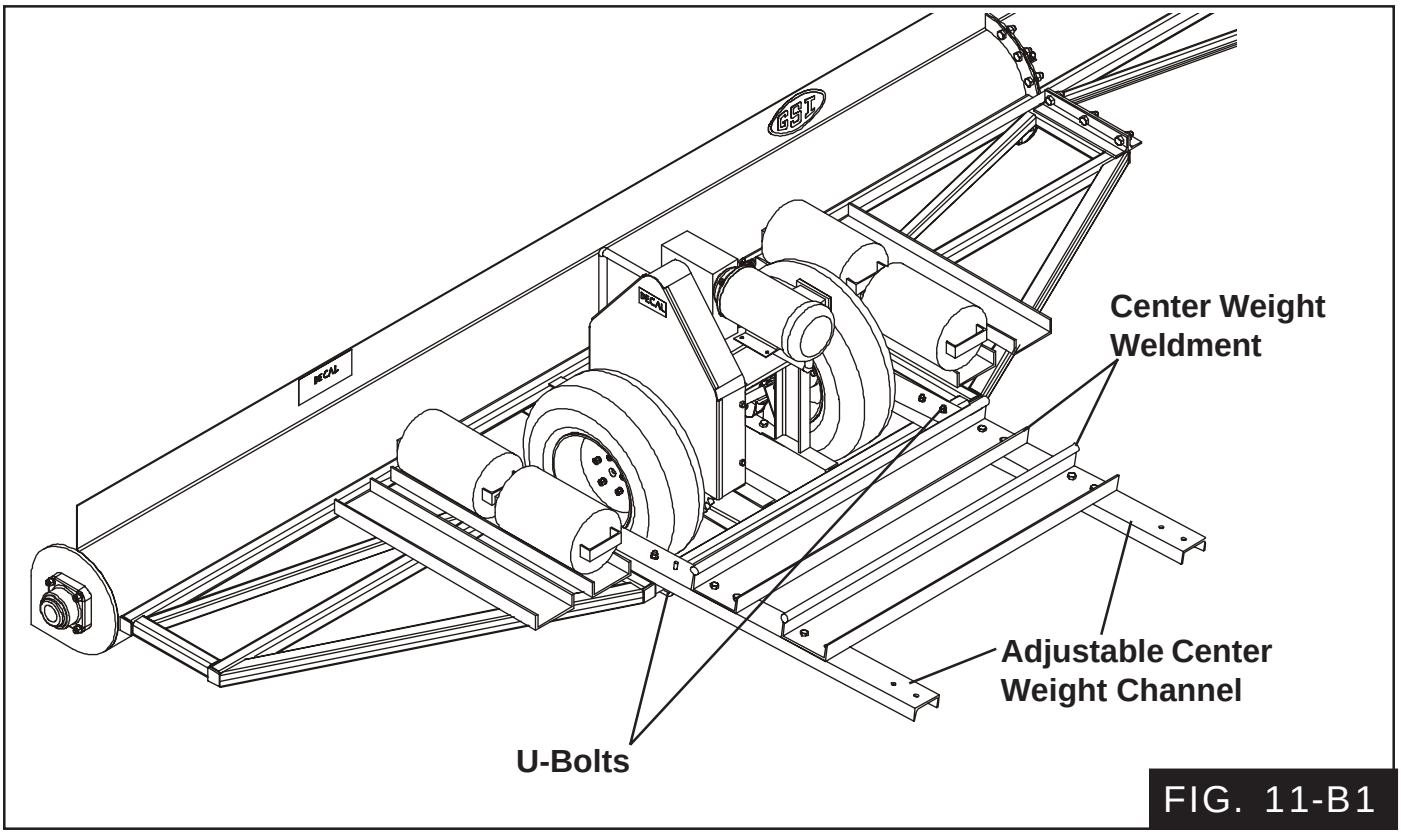

FIG. 11-B1

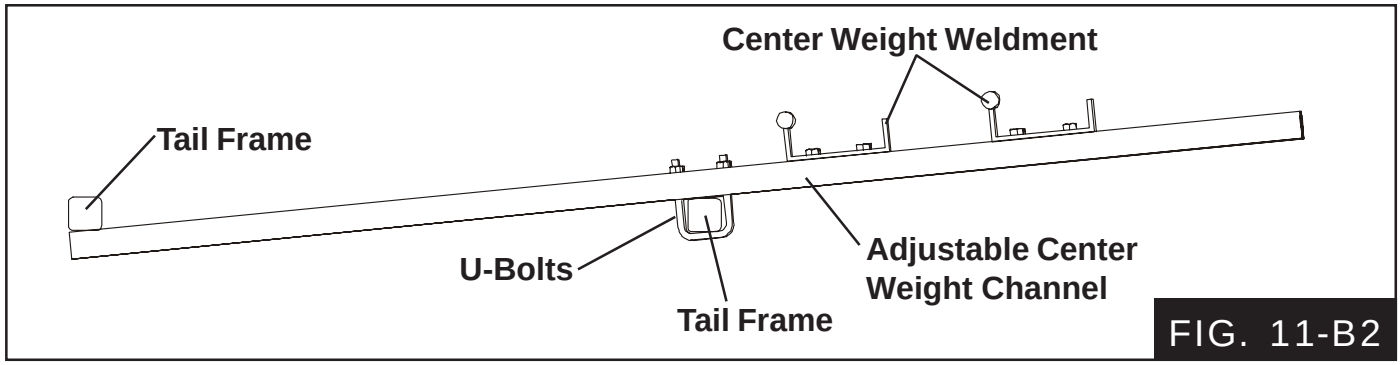

FIG. 11-B2

12. MOTOR JACK AND BASE ASSEMBLY

A. Attach the Motor Mount Base Assembly to the Head Section using four (4) 3/4"x 2"bolts, lock washers and hex nuts. (See Fig 12)

B. Attach the Motor Jack Assembly to the Motor Mount Base Assembly using four (4) 1/2"-13 x 1-1/2" bolts, 1/2" flat washers and 1/2" hex nuts.

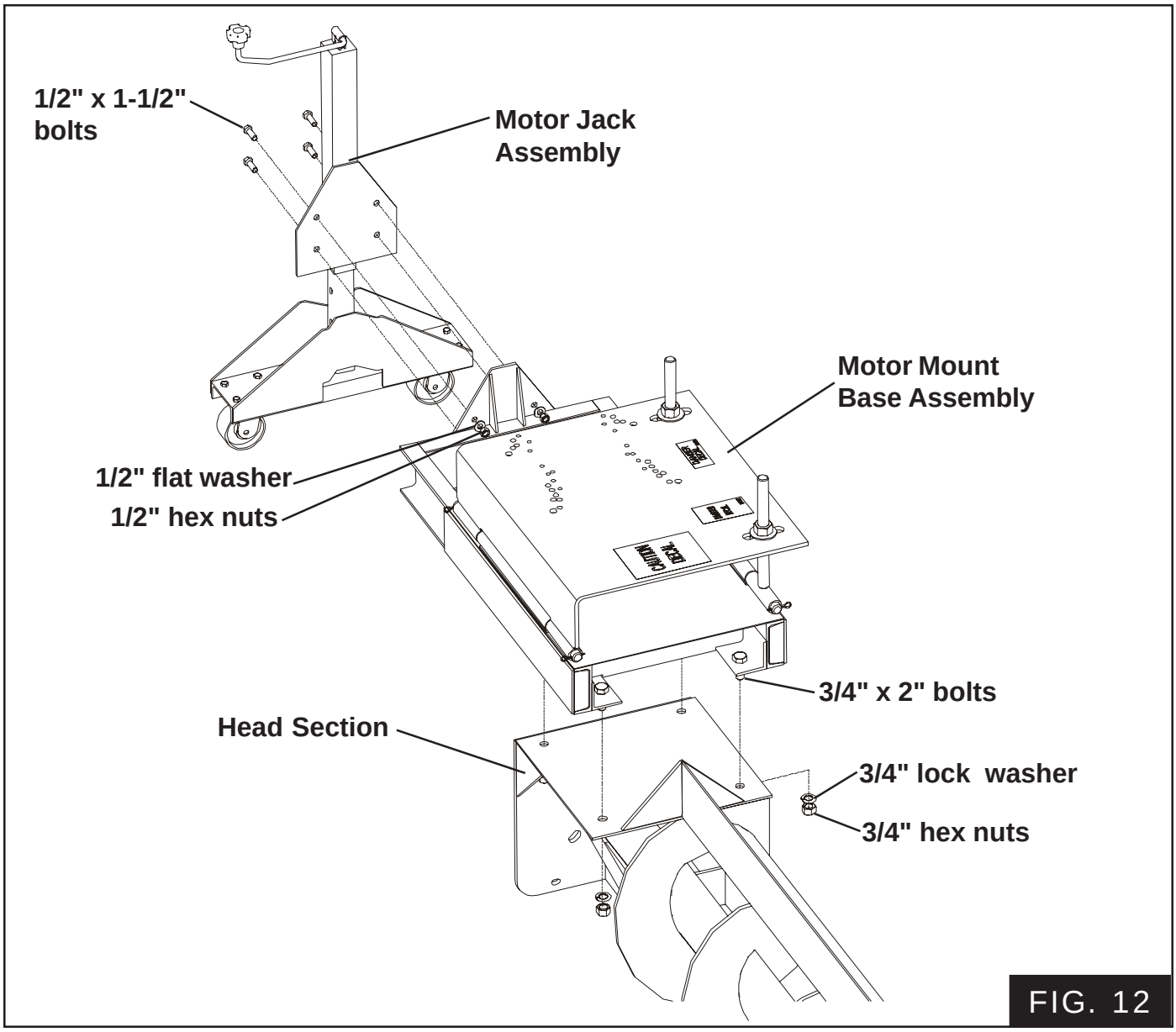

FIG. 12

13. MOTOR INSTALLATION

A. Level the Top Plate Assembly by adjusting the 1" nuts and washers on the adjustment rods. (See Fig 13)

B. Line up the end face of the shafts as closely as possible before bolting motor to mounting plate. (See Fig 13-A)

C. Fasten the motor to the motor mount using hex bolts, lockwashers, and hex nuts. (See Motor Bolt Chart for bolt sizes.)

Motor Bolt Chart		
Motor Size	**Hex Bolt Size**	**Qty.**
213T	3/8"-16 x 1-1/4"	4
215T	3/8"-16 x 1-1/4"	4
254T	1/2"-13 x 1-3/4"	4
256T	1/2"-13 x 1-3/4"	4
284T	1/2"-13 x 1-3/4"	4
286T	1/2"-13 x 1-3/4"	4

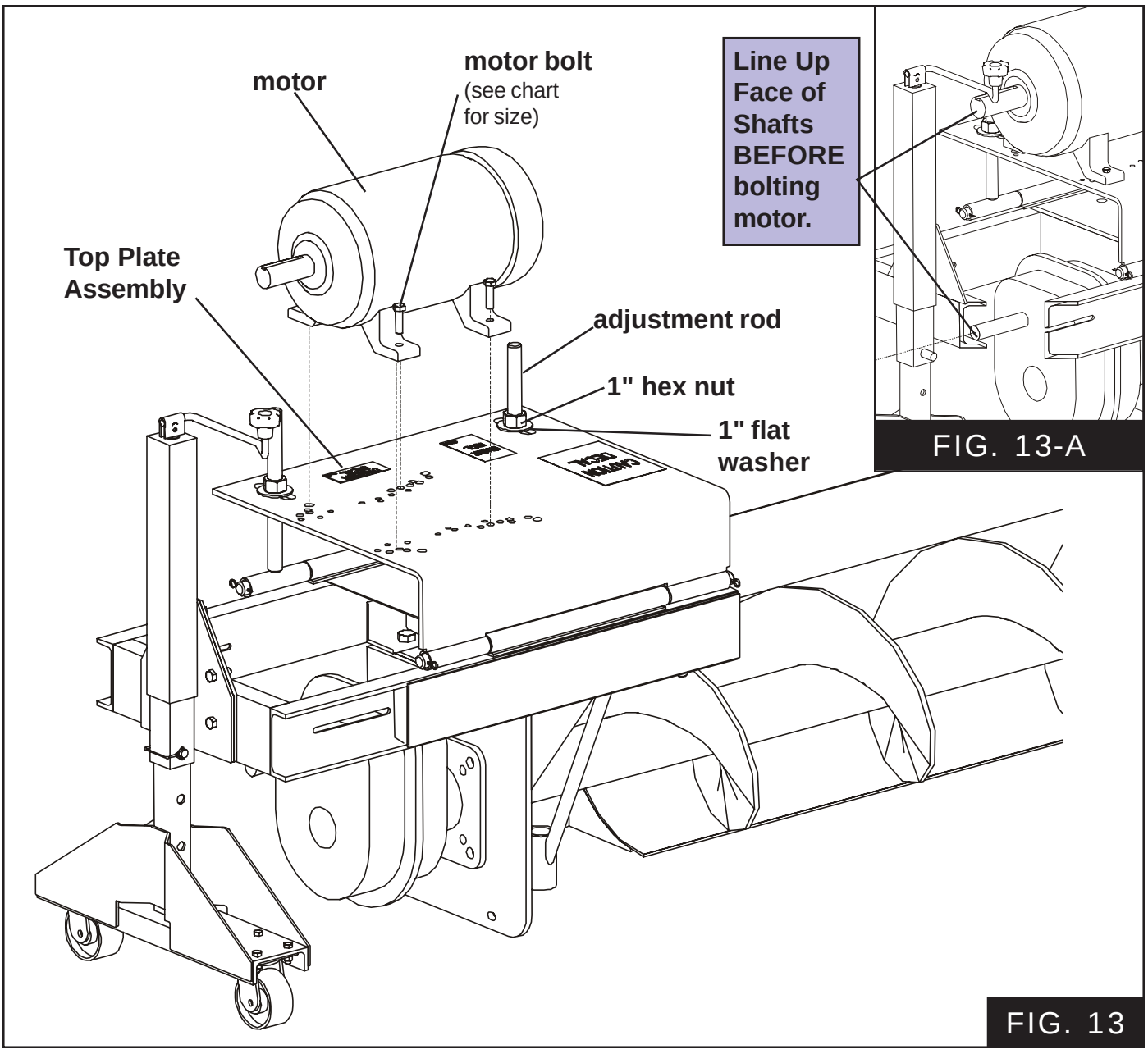

FIG. 13-A

FIG. 13

13. MOTOR INSTALLATION - (CONT.)

D. Insert the upper belt guard seal (Slider) GC12024 into the track on the belt guard fill plate (GC12023.)

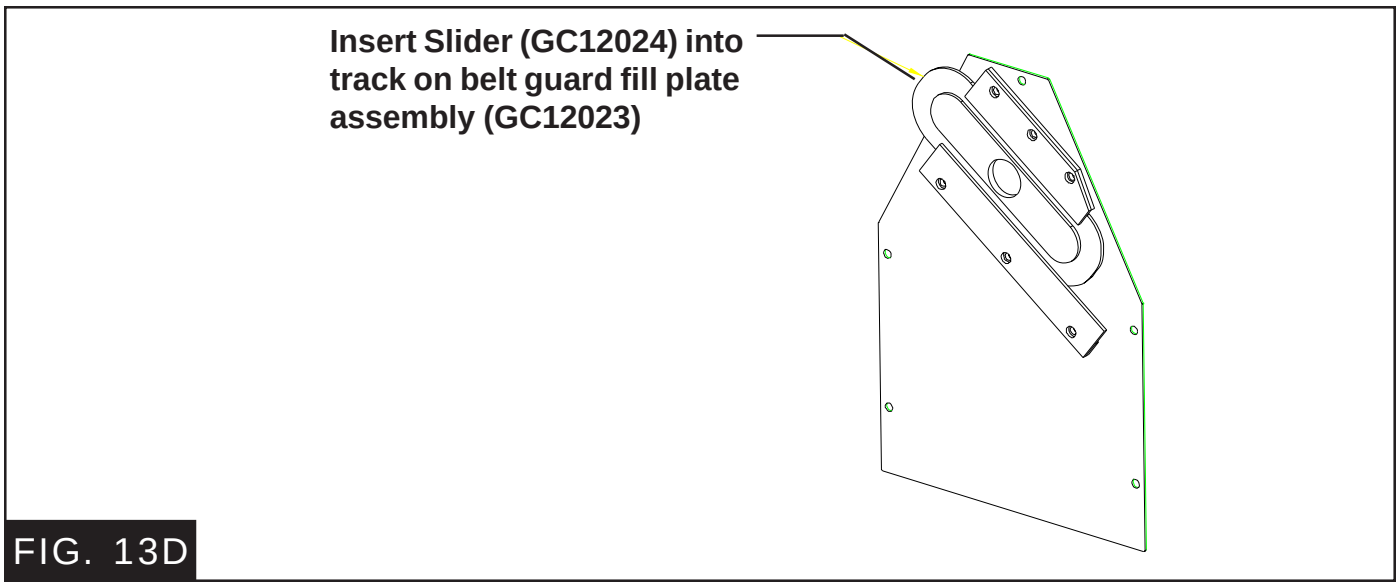

FIG. 13D

E. Install the Slider/fill plate assembly over the motor shaft before mounting the motor sheave and bushing.

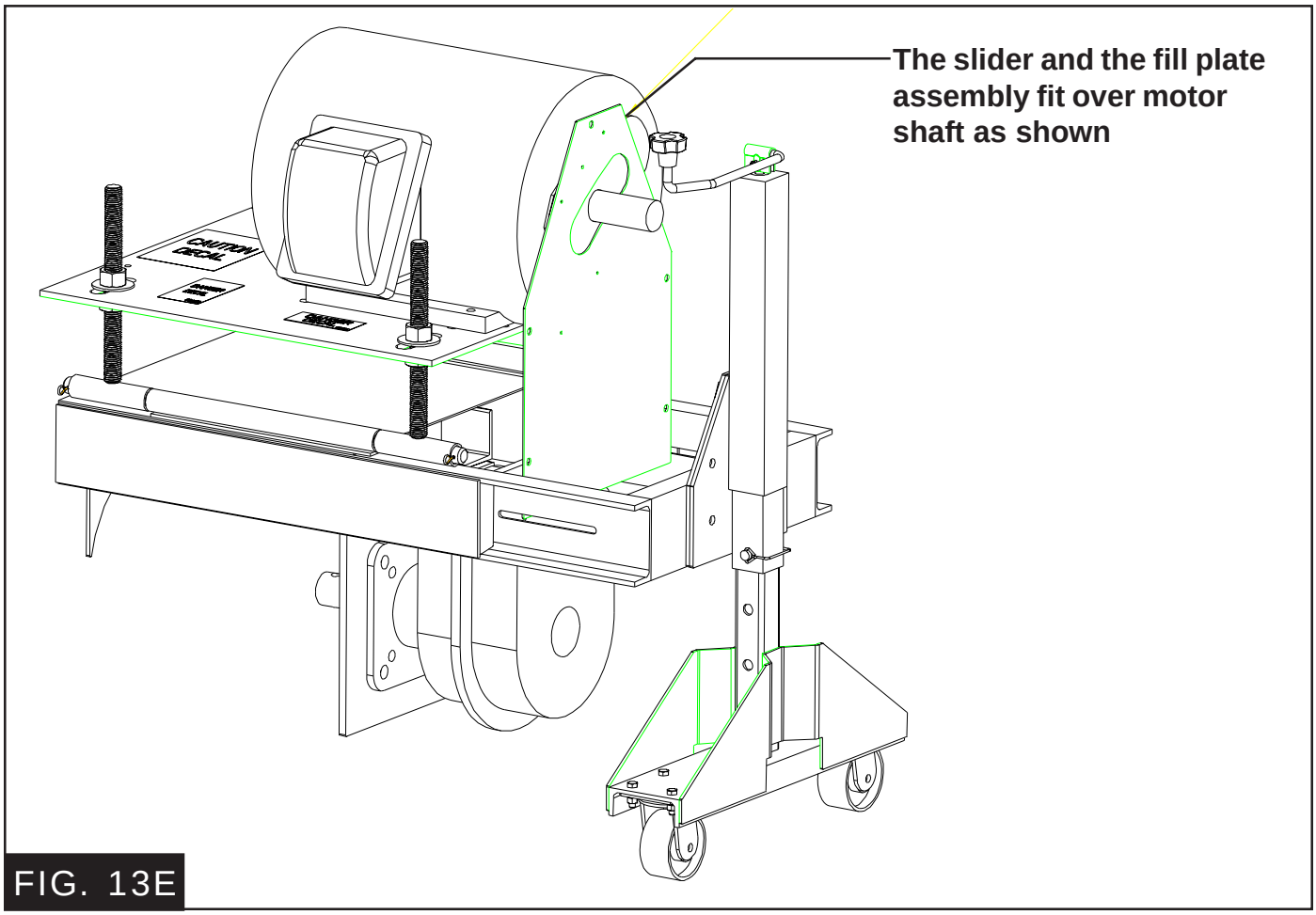

FIG. 13E

NOTES

14. SHEAVE INSTALLATION

Warning! To ensure that the drive is not unexpectedly started, turn off and lock out or tag out the power source before proceeding. Failure to observe these precautions could result in bodily injury.

A. Loosely bolt the bushing and large sheave together with the screws provided with the bushing.

B. Slide the bushing and large sheave onto the auger gear reducer input shaft with a key. (See Fig. 14-A)

CAUTION

Wedging forces in the bushing saw slot, such as that exerted by a narrow edged regular screw driver, may damage or break the bushing. This damage would not be covered under the GSI warranty.

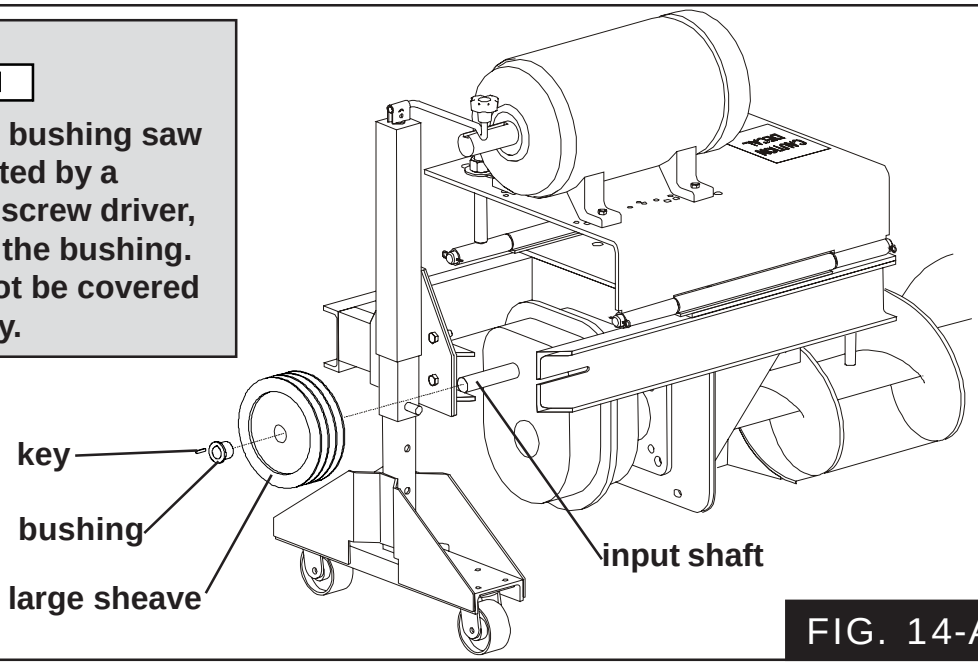

FIG. 14-A

C. Loosely bolt the bushing and small sheave together with the screws provided with the bushing.

D. Slide the bushing and small sheave onto the motor shaft with a key. (See Fig. 14-B)

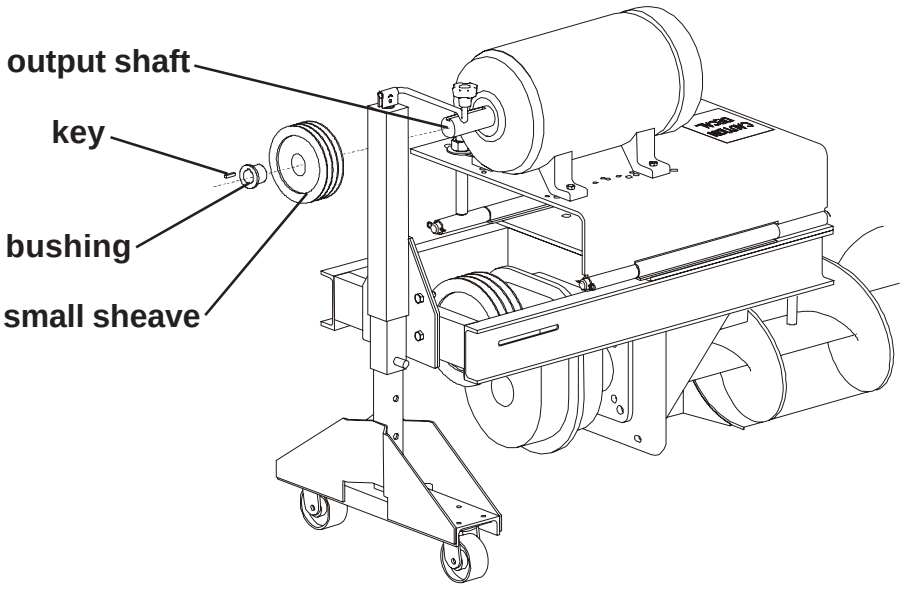

FIG. 14-B

14. SHEAVE INSTALLATION (cont.)

E. Align the sheaves with a straight edge to assure proper alignment and tighten the screws on the bushings.

F. Carefully install the belts.

Adjust the all-thread nuts on the motor mount to attain correct belt tension while making sure the motor mount is level on both rods. This will also affect sheave alignment.

G. Assemble the bottom belt guard assembly. Attach the belt guard back plate assembly (GC12028) to the belt guard bottom shell assembly (GC09764) using 3/8-16 x 1 HHCS and 3/8 lock washers.

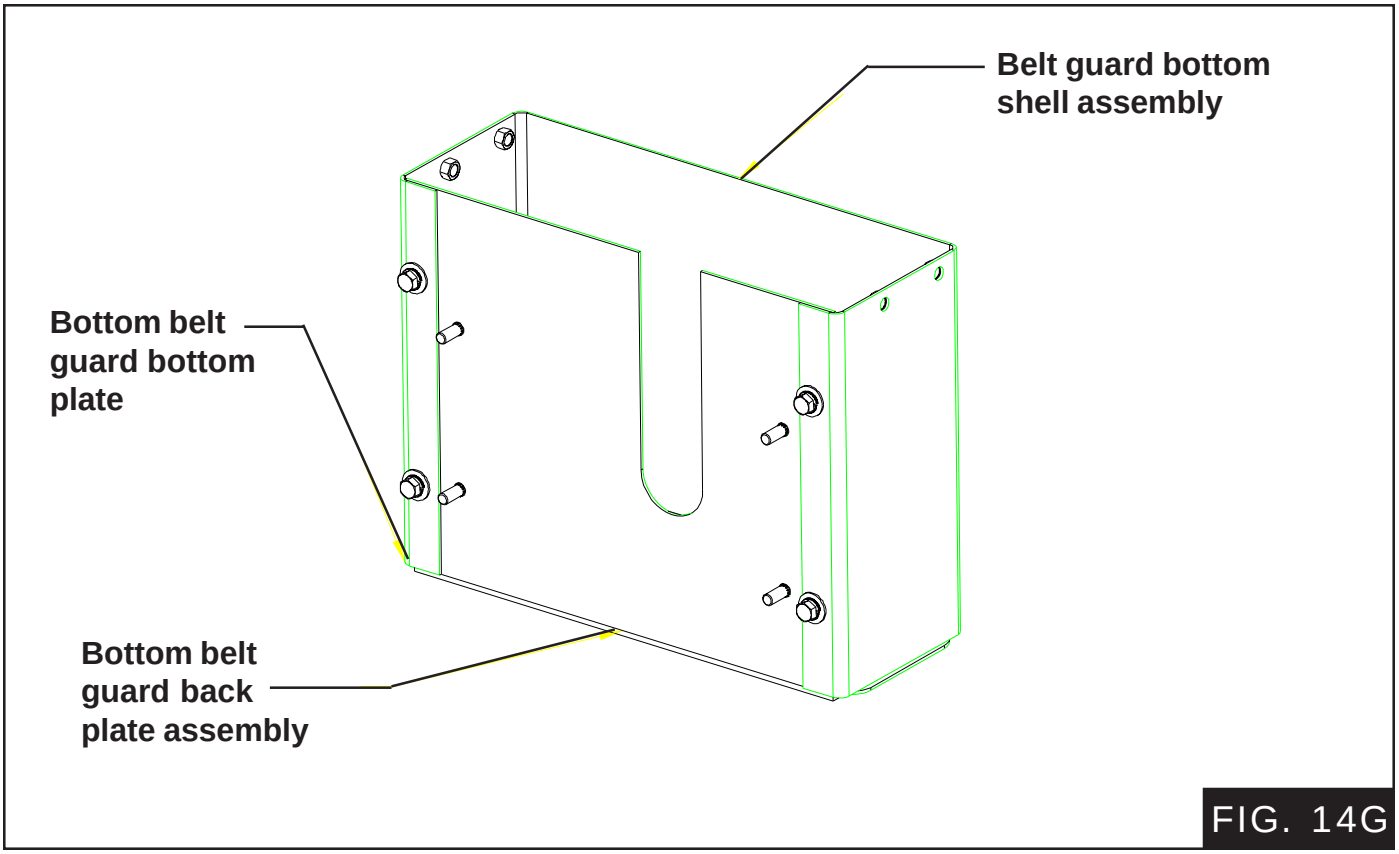

FIG. 14G

14. SHEAVE INSTALLATION (cont.)

H. Attach the bottom belt guard assembly to the motor mount frame with 3/8-16 x 1 HHCS, 3/8 flat washers and 3/8 lock washers. Do not tighten the 3/8 HHCS as the assembly will be adjusted after the top cover is attached.

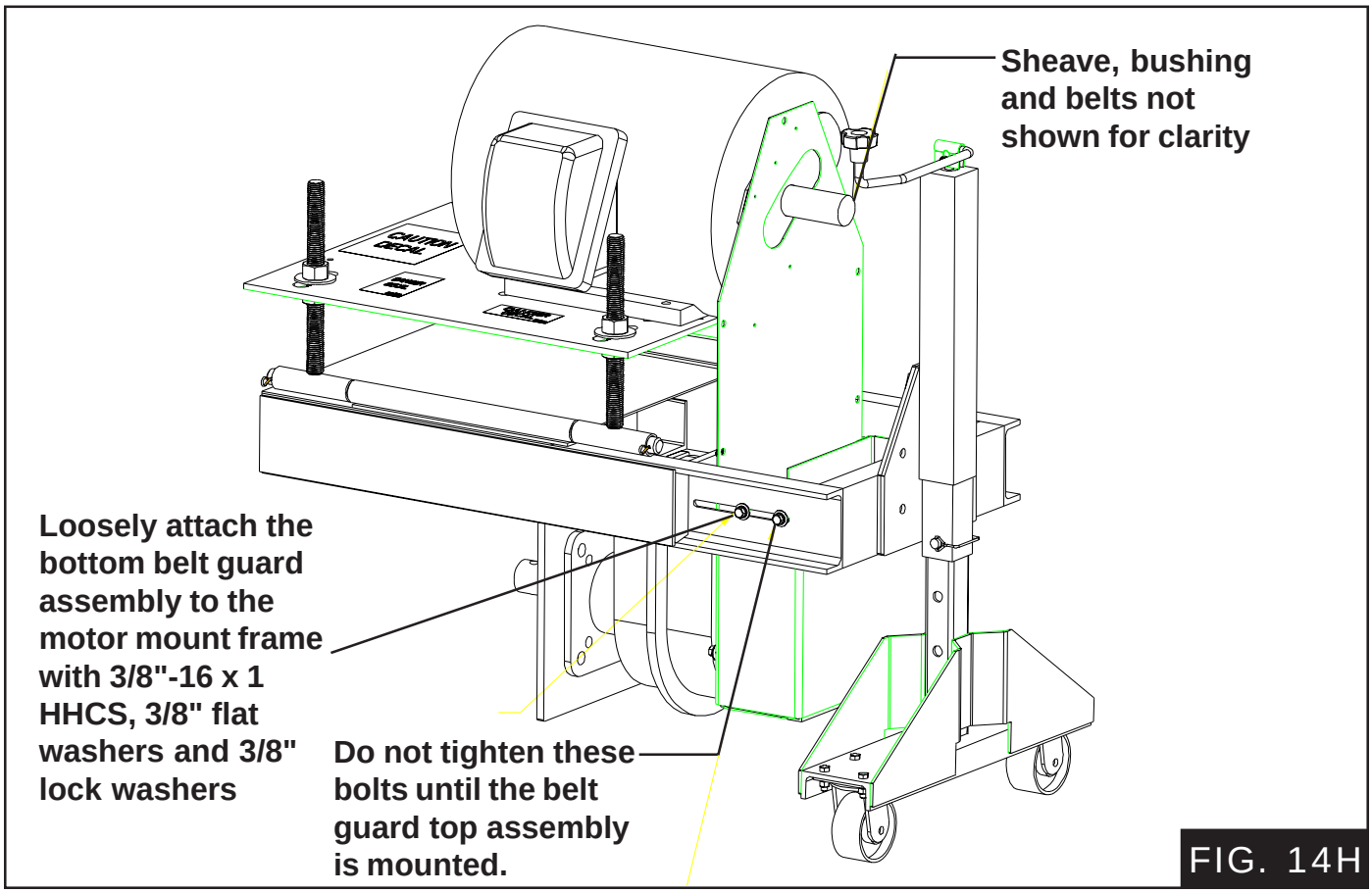

FIG. 14H

I. Attach both the bottom belt guard seals (GC12026 an GC12027) around the reducer shaft and to the bottom belt guard assembly using 3/8-16 x 1 HHCS, 3/8 flat washers and 3/8 lock washers.

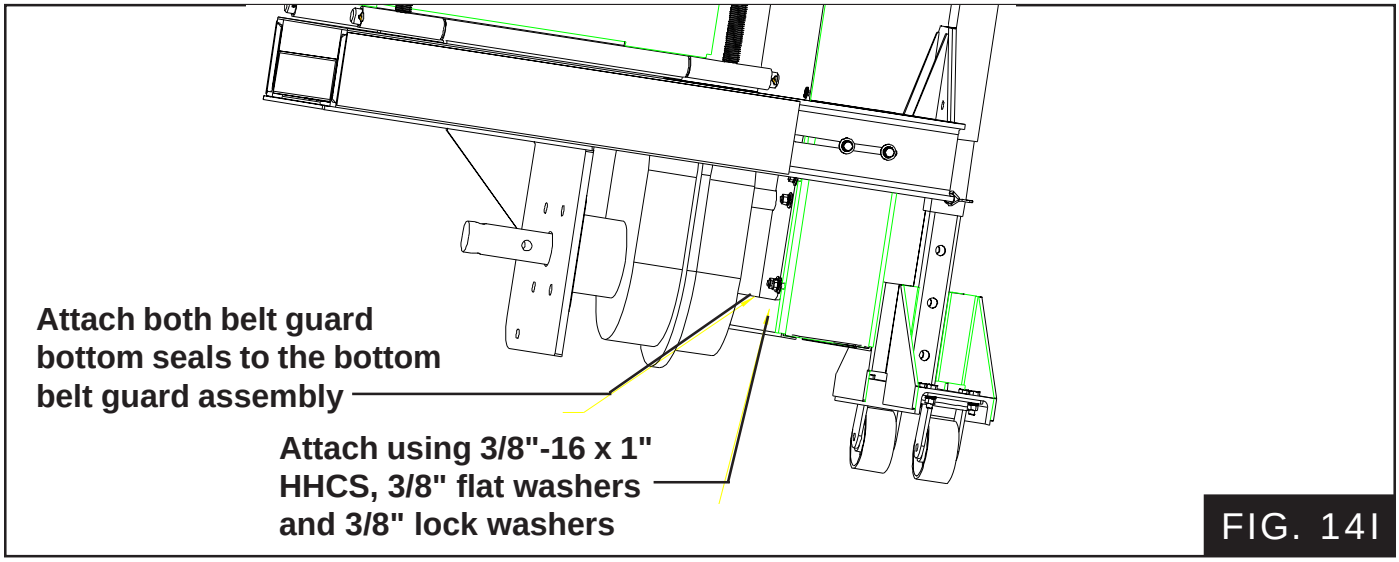

FIG. 14I

14. SHEAVE INSTALLATION (cont.)

J. Slide the belt guard top assembly over the lower belt guard assembly attachment bolts. Attach the belt guard top assembly to the fill plate using 3/8-16 x 1 HHCS, 3/8 flat washers and 3/8 lock washers. Slide the complete belt guard assembly as close to the motor as possible without allowing the sheaves or the belt to rub the steel guard. Tighten the belt guard attachment bolts.

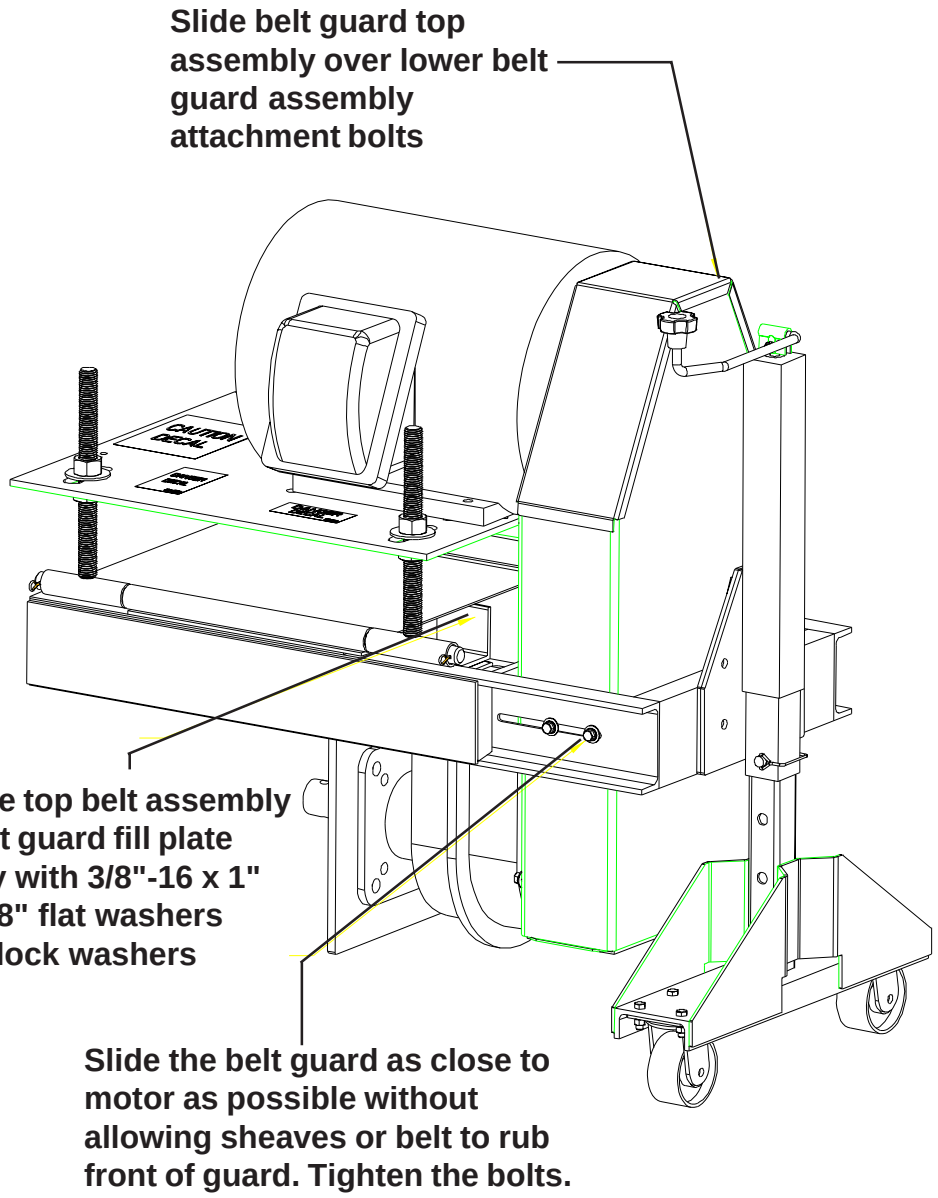

FIG. 14J

14. SHEAVE INSTALLATION (cont.)

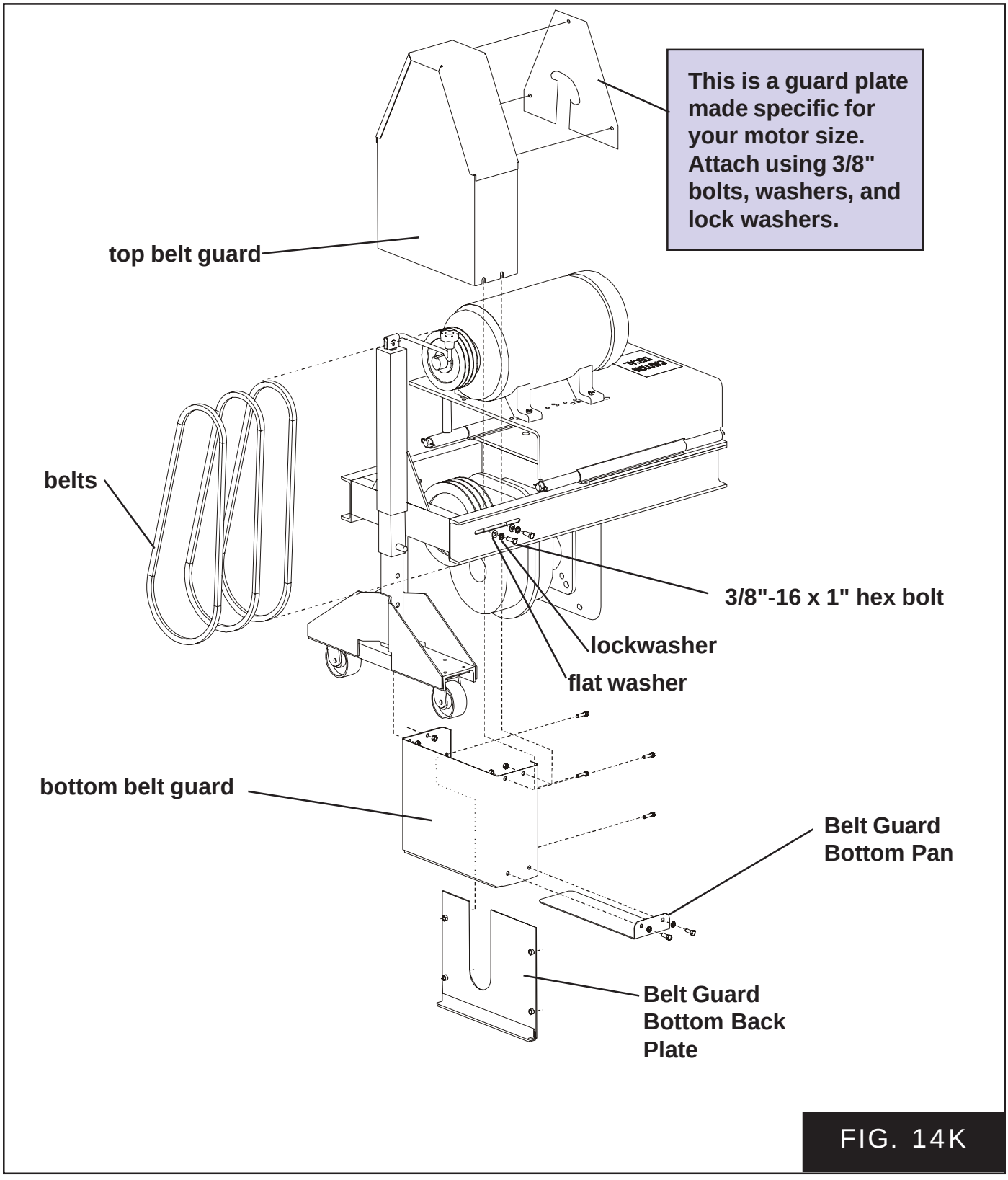

FIG. 14K

NOTES

15. ELECTRICAL ASSEMBLY

Caution! All electrical wiring and service work must be performed by a qualified electrician and must meet all State and Local electrical codes.

See the chart for the correct size of conduit to the corresponding sweep size.

A. Place the 3/4" rigid conduit in order starting with the head section and working towards the tail or extension section.

B. Connect the rigid conduit together using one (1) 3/4" conduit coupling between each piece of conduit.

FIG. 15-B

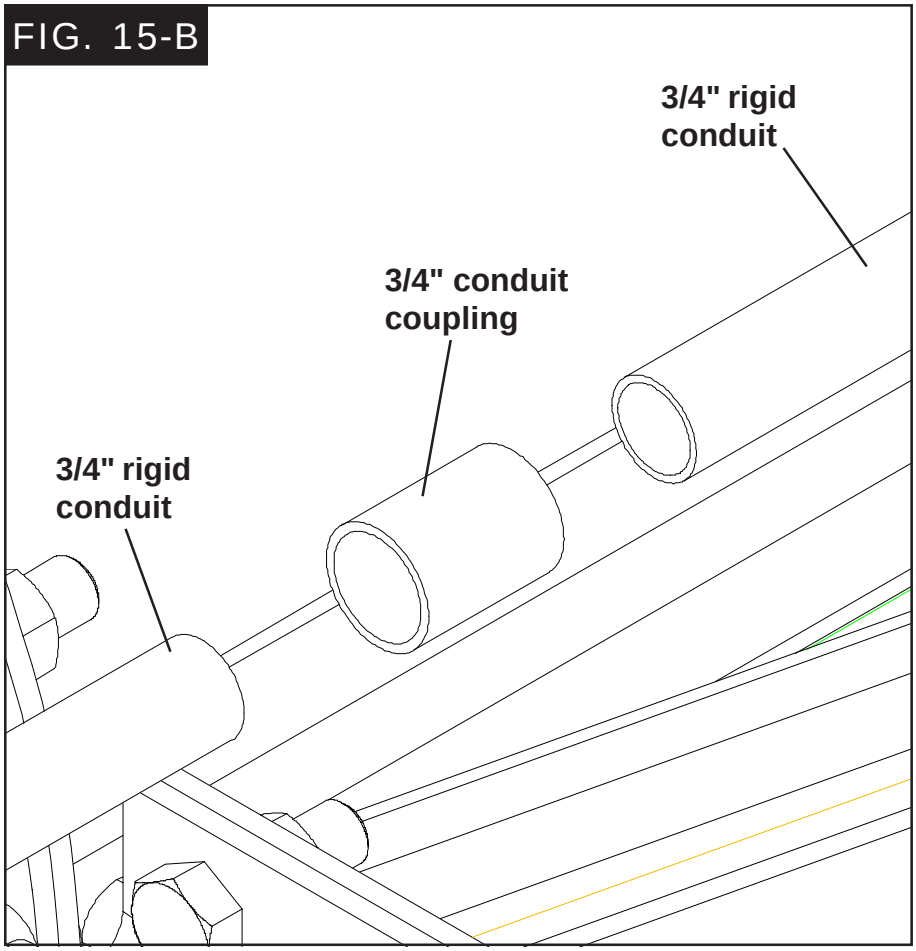

Sweep Section Conduit Sizes

Bin Diameter	10' Conduit Pieces	Other Pieces
36'	N/A	1 @ 9'
37'	1	N/A
39'-40'	1	1 @ 1'
42'	1	1 @ 2'
43'-45'	1	1 @ 3'
48'-49'	1	1 @ 5'
51'	1	1 @ 6'
54'-55'	1	1 @ 8'
57'	1	1 @ 9'
59'	2	N/A
60'	2	1 @ 1'
62'-63'	2	1 @ 2'
66'	2	1 @ 4'
68'-69'	2	1 @ 5'
72'	2	1 @ 7'
75'	2	1 @ 8'
78'	3	N/A
80'-81'	3	1 @ 1'
84'	3	1 @ 3'
87'	3	1 @ 4'
88'	3	1 @ 5'
90'-91'	3	1 @ 6'
92'	3	1 @ 7'
95'	3	1 @ 8'
98'	4	N/A
105'	3	1 @ 9'
113'-120'	4	N/A

15. ELECTRICAL ASSEMBLY (cont.)

C. Connect the 3/4" x 48" liquid-tight flex conduit to the drive end of the 3/4" rigid conduit using one (1) 3/4" conduit coupling and one (1) 3/4" liquid-tight flex conduit coupling.

1. Thread a 3/4" conduit coupling onto the 3/4" rigid conduit.
2. Thread a 3/4" flex conduit coupling body onto the 3/4" conduit coupling.
3 Slide a 3/4" flex conduit coupling cap onto the 3/4" flex conduit followed by a plastic ring.
4. Thread a steel ring into the 3/4" flex conduit.
5. Thread the 3/4" flex conduit coupling cap onto the 3/4" flex conduit coupling body.

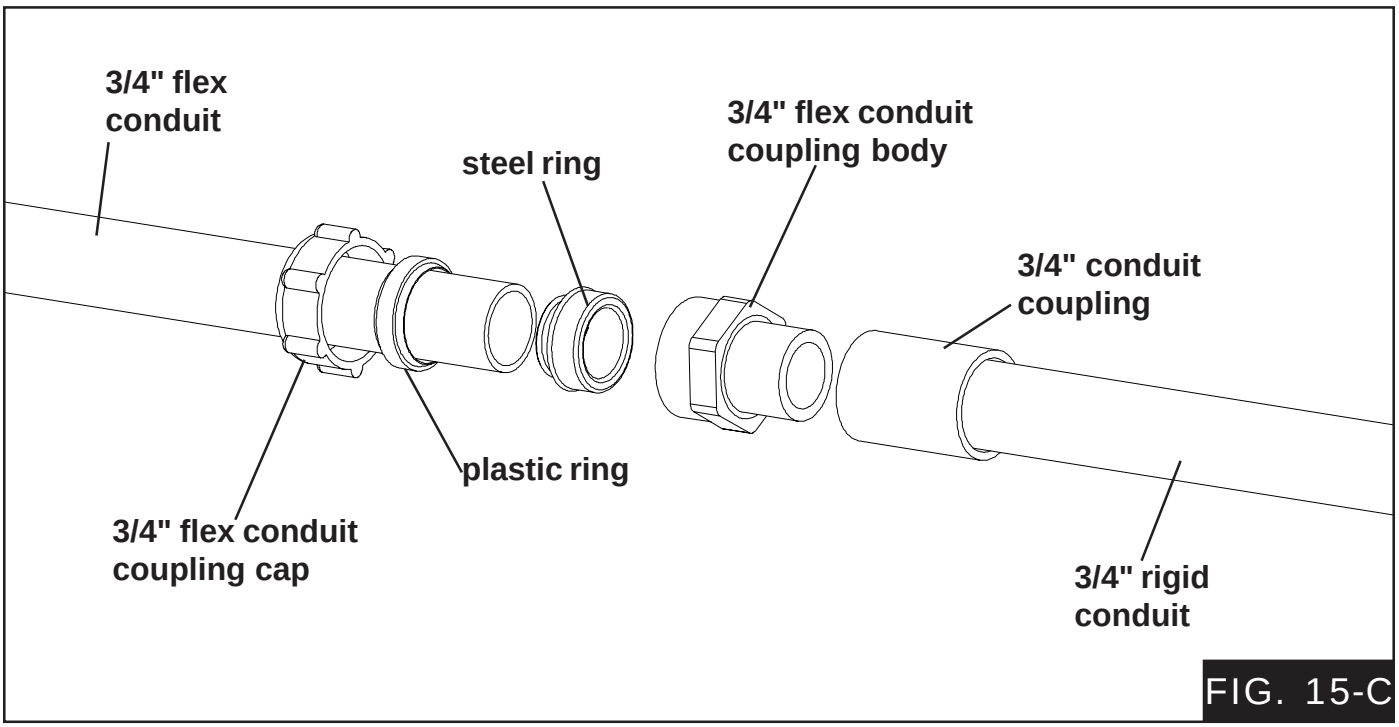

FIG. 15-C

15. ELECTRICAL ASSEMBLY (cont.)

D. Attach the 3/4" x 12" liquid-tight flex conduit to the other end of the rigid conduit using one (1) 3/4" conduit coupling and one (1) 3/4" liquid-tight flex conduit coupling.

E Connect the two (2) junction boxes together using the 1" x 4 3/4" conduit nipple.

F. Connect the 3/4" x 12" liquid-tight flex conduit to the left junction box using one (1) 3/4" liquid-tight flex conduit coupling and one (1) 1" to 3/4" reducer bushing.

G. Attach the 3/4" x 40" liquid-tight flex conduit to the right junction box using one (1) 3/4" liquid-tight flex conduit coupling and one (1) 1" to 3/4" reducer bushing.

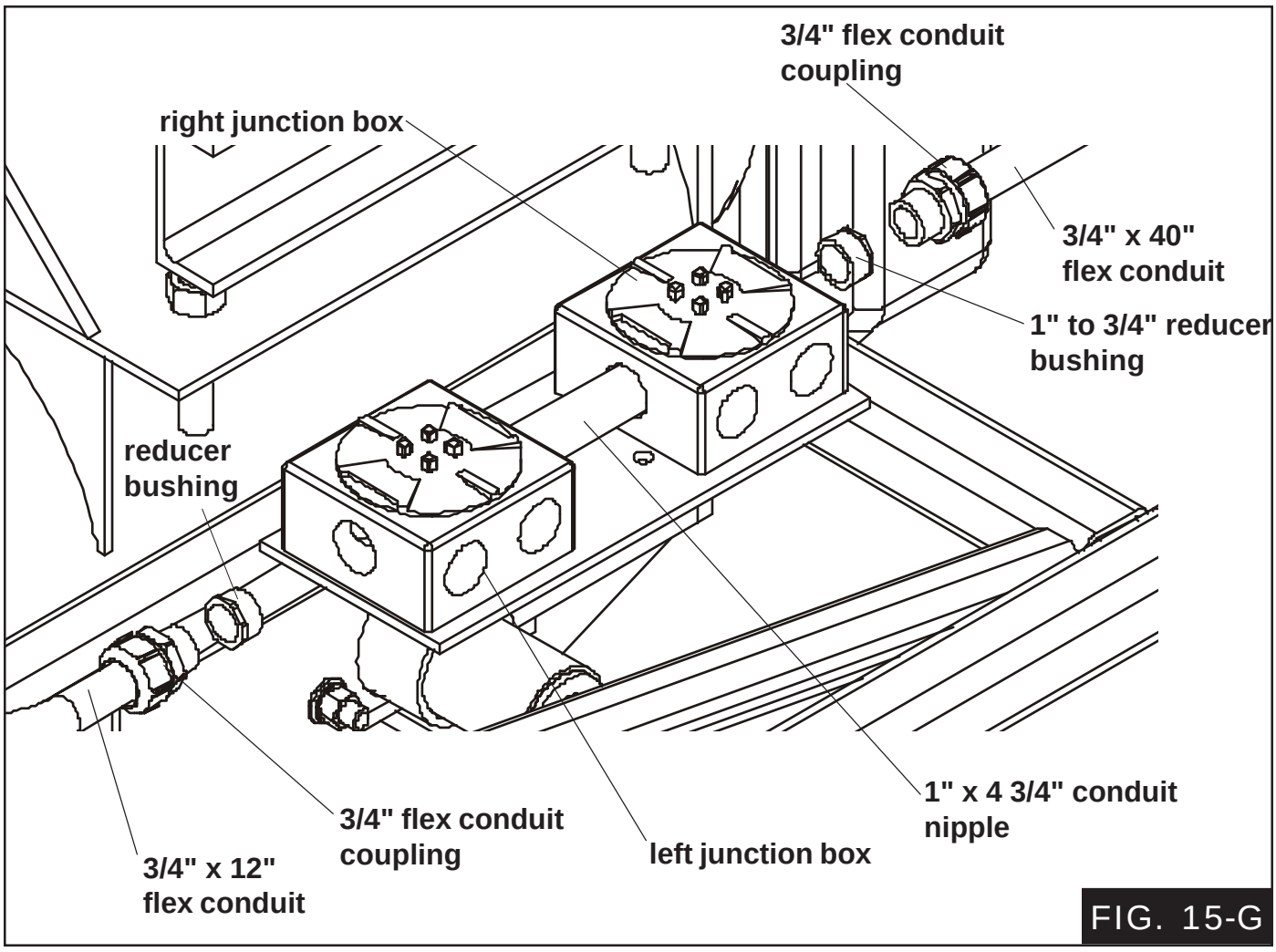

FIG. 15-G

H. Feed each of the six (6) 14 AWG stranded wires through the 3/4" rigid conduit assembly and cut them off, leaving six inches (6") at both the left junction box and drive motor.

I. Feed each of the six (6) 10 AWG stranded wires cord through the 3/4" x 40" liquid tight flex conduit and cut four (4) of them off, leaving six inches (6") at both the right junction box and auger motor. Cut the 10 AWG blue and yellow wires longer so they can be connected to the 14 AWG blue and yellow wires in the left junction box.

15. ELECTRICAL ASSEMBLY (cont.)

J. Place the 3/4" rigid conduit assembly onto the back frame of the sweep between the connecting angle and connecting flange.

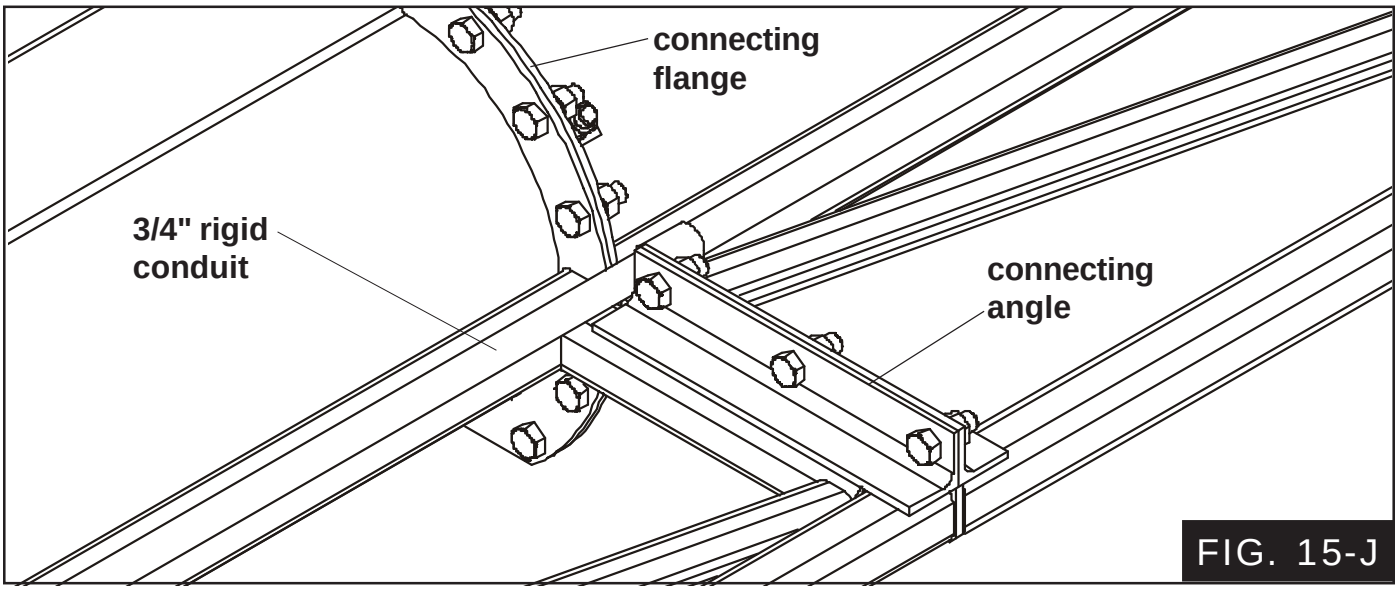

FIG. 15-J

K. Fasten the junction boxes to the mounting plate using two (2) 3/8"-16 x 1 3/8" u-bolts, four (4) lockwashers, and hex nuts.

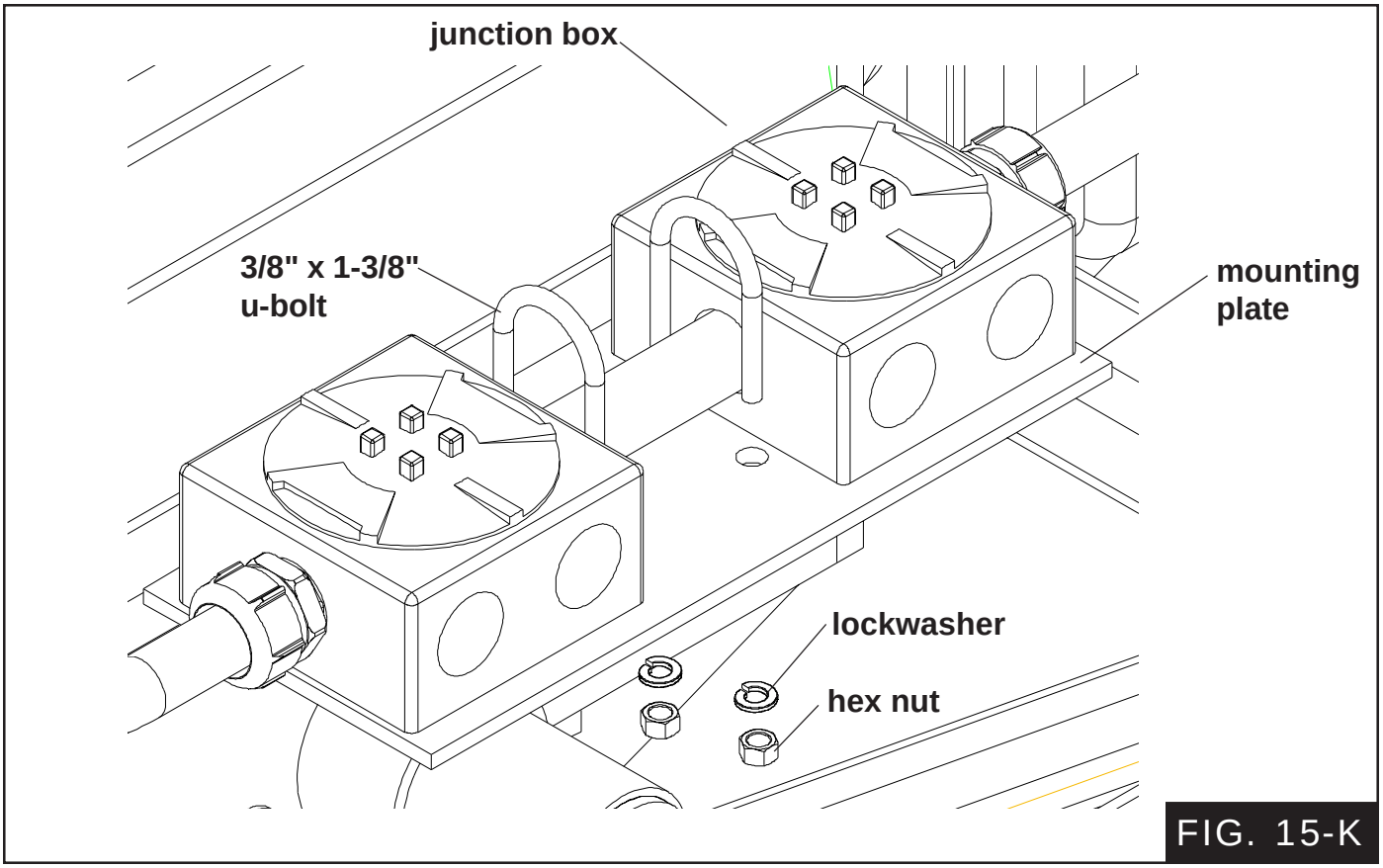

FIG. 15-K

15. ELECTRICAL ASSEMBLY (cont.)

L. Attach the 3/4" rigid conduit assembly to the sweep using the 5/16"-18 x 3/4" studs welded to the sweep using 1" conduit clamps, lockwashers, and hex nuts.

M. Run the 14 AWG stranded wires into the drive motor and fasten the 3/4" x 48" liquid-tight flex conduit to the motor using one (1) 3/4" liquid-tight flex conduit coupling. Some motors may require a reducer bushing not supplied with the sweep. Connect the leads as required.

N. Run the 10 AWG stranded wires into the auger motor and fasten the 3/4" x 40" liquid-tight flex conduit to the motor using one (1) 3/4" liquid-tight flex conduit coupling. Some motors may require a reducer bushing not supplied with the sweep. Connect the leads as required.

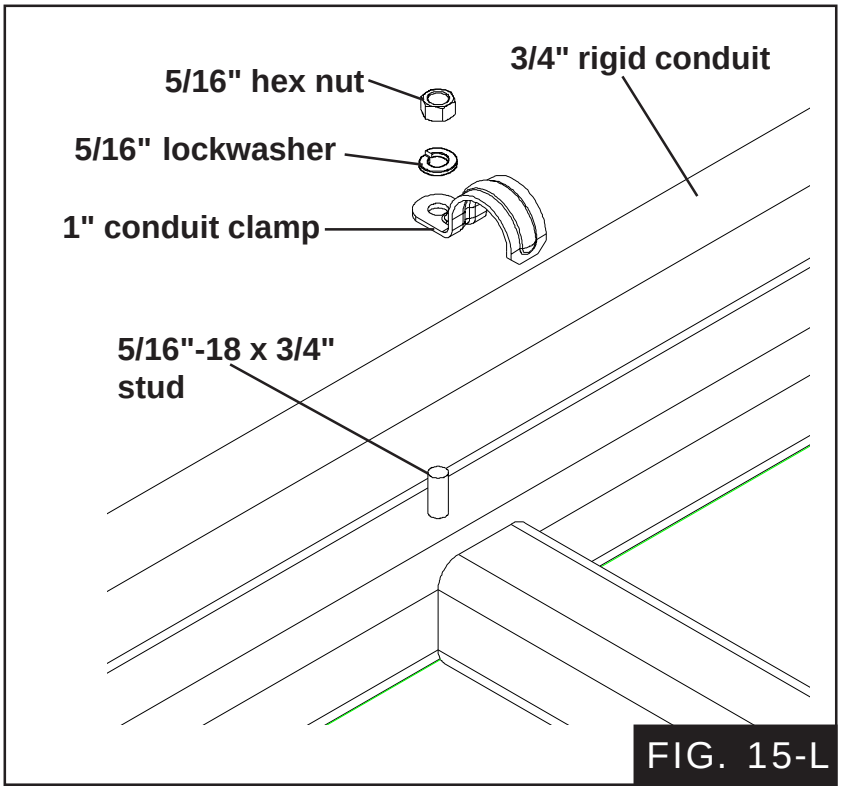

FIG. 15-L

If you are using the pivot kit, skip to page 47 and refer to step "17A".

O. **Tractor Drive:**
Slide a 5/8" to 3/4" cord connector six inches (6") onto one (1) end of the 14 AWG/4 wire cords and fasten it to the junction box using one (1) 1" to 3/4" reducer bushings. Connect the leads as required.

Sweep Drive all 12" and 16" under 105 Model:
Slide a 5/8" to 3/4" cord connector six inches (6") onto one (1) end of the 10 AWG/4 wire cords and fasten it to the junction box using one (1) 1" to 3/4" reducer bushings. Connect the leads as required.

Sweep Drive all 16" 105 Model and over:
Slide a 5/8" to 3/4" cord connector six inches (6") onto one (1) end of the 8 AWG/4 wire cords and fasten it to the junction box using one (1) 1" to 3/4" reducer bushings. Connect the leads as required.

P. Slide a 1/2" to 5/8" cord connector six inches (6") onto the end of the 14 AWG/3 wire cord and fasten it to the junction box using one (1) 1" to 3/4" reducer bushings. Connect the leads as required.

Q. Use the plugs provided with the junction boxes to close the holes not being used.

15. ELECTRICAL ASSEMBLY (CONT.)

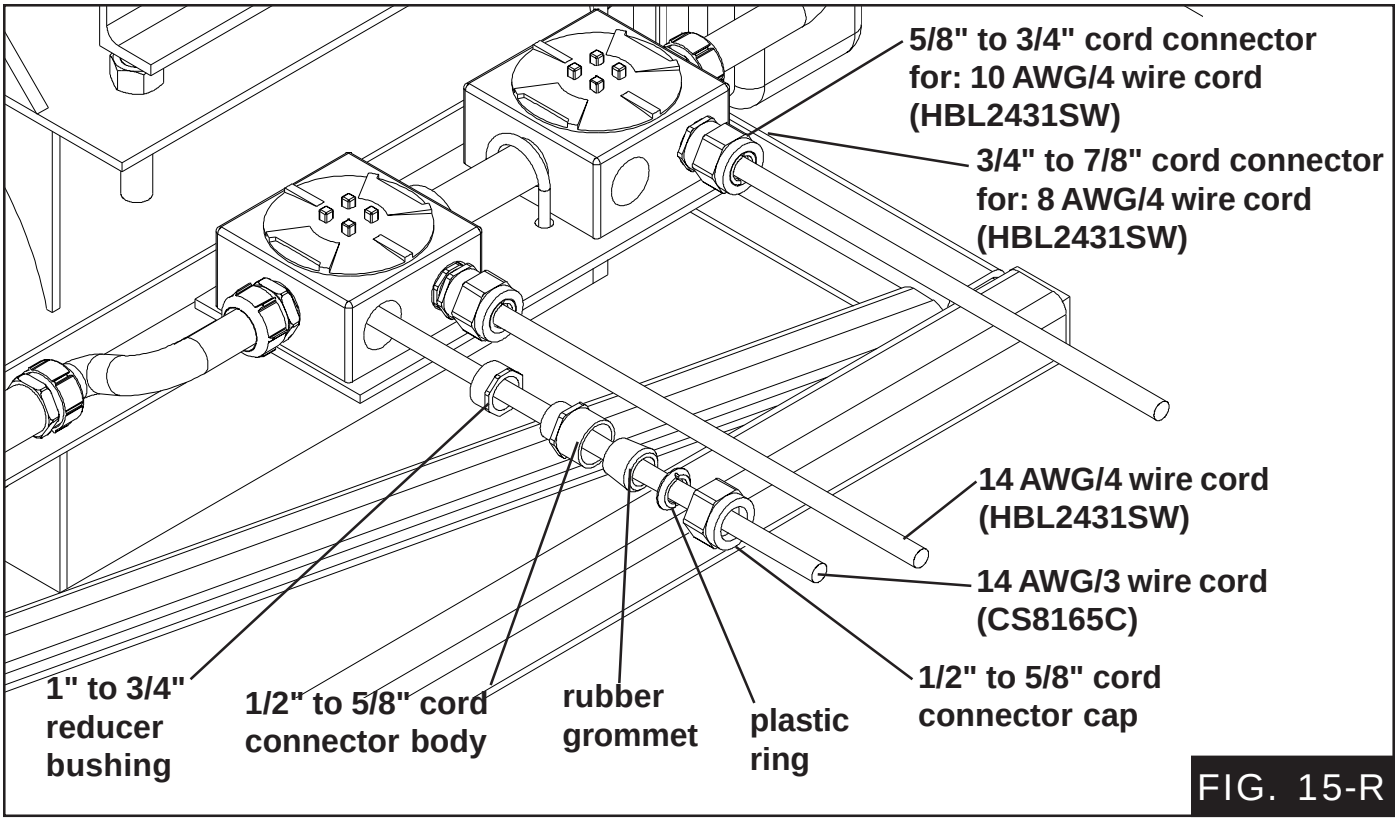

FIG. 15-R

R. Assemble the cord plugs to the other end of each cord. The 14 AWG/4 wire cord requires the "HBL2431SW" plug. The 10 AWG/4 and 8 AWG/4 wire cord requires the "CS8165C" plug. The 14 AWG/3 wire cord requires the "HBL2311SW" plug.

The plugs are different for each cord and MUST be assembled correctly. This is done so the cords can not be plugged into the control panel incorrectly.

S. Mount the control panel outside the bin near the door.

The control panel MUST be mounted OUTSIDE the bin near the door. The foot switch has to be plugged into the control panel and depressed before the sweep is operational. It has a 10' cord so the sweep can only be monitored from OUTSIDE the bin.

16. JACK SUPPORT ASSEMBLY

Be sure to use the spanner bushings, supplied with the caster wheels, between the caster and the caster plate on each side. (12" Sweeps Only.)

All Current Production and Old Style 12" Jack Support (See fig. 16-A & 16-C)

A. Attach one (1) caster wheel to the jack caster assembly using one (1) 3/4" x 5-1/2" hex bolt, lockwasher, and hex nut.

B. Locate the 2" x 2" x 12" tube to the right of each connecting angle and fasten the jack mount assembly to the sweep frame using one (1) jack mount plate, four (4) 1/2"-13 x 3-3/4" hex bolts, lockwashers, and hex nuts.

C. Attach the jack caster assembly to the jack assembly using one (1) pin.

D. Bolt the jack assembly to the jack mount assembly using four (4) 1/2"-13 x 2" hex bolts, lockwashers, and hex nuts.

All Old Style 16" Jack Support (See fig. 16A & 16-C)

A. Attach one (1) caster wheel to the jack caster assembly using one (1) 3/4" x 5-1/2" hex bolt, lockwasher, and hex nut.

B. Locate the 2" x 2" x 12" tube to the right of each connecting angle and fasten the jack mount assembly to the sweep frame using one (1) jack mount plate, four (4) 1/2"-13 x 3-3/4" hex bolts, lockwashers, and hex nuts.

C. Attached 16" Jack Caster Assembly to the swivel caster wheel using four (4) 1/2" x 1-1/2" HHCS bolts, lockwashers, & hex nuts.

D. Attach the jack caster assembly to the jack assembly using one (1) pin.

E. Bolt the jack assembly to the jack mount assembly using four (4) 1/2"-13 x 2" hex bolts, lockwashers, and hex nuts.

CURRENT PRODUCTION SWEEP SHOWN

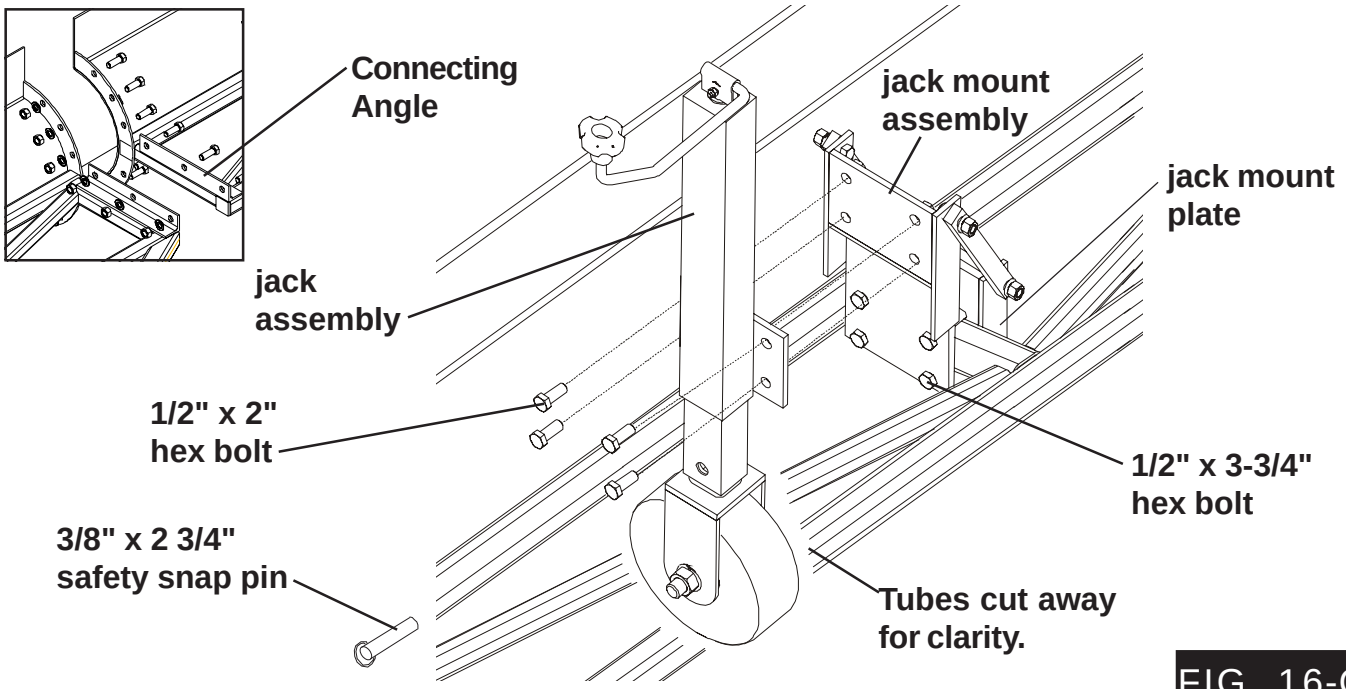

FIG. 16-C

FIG. 16-A

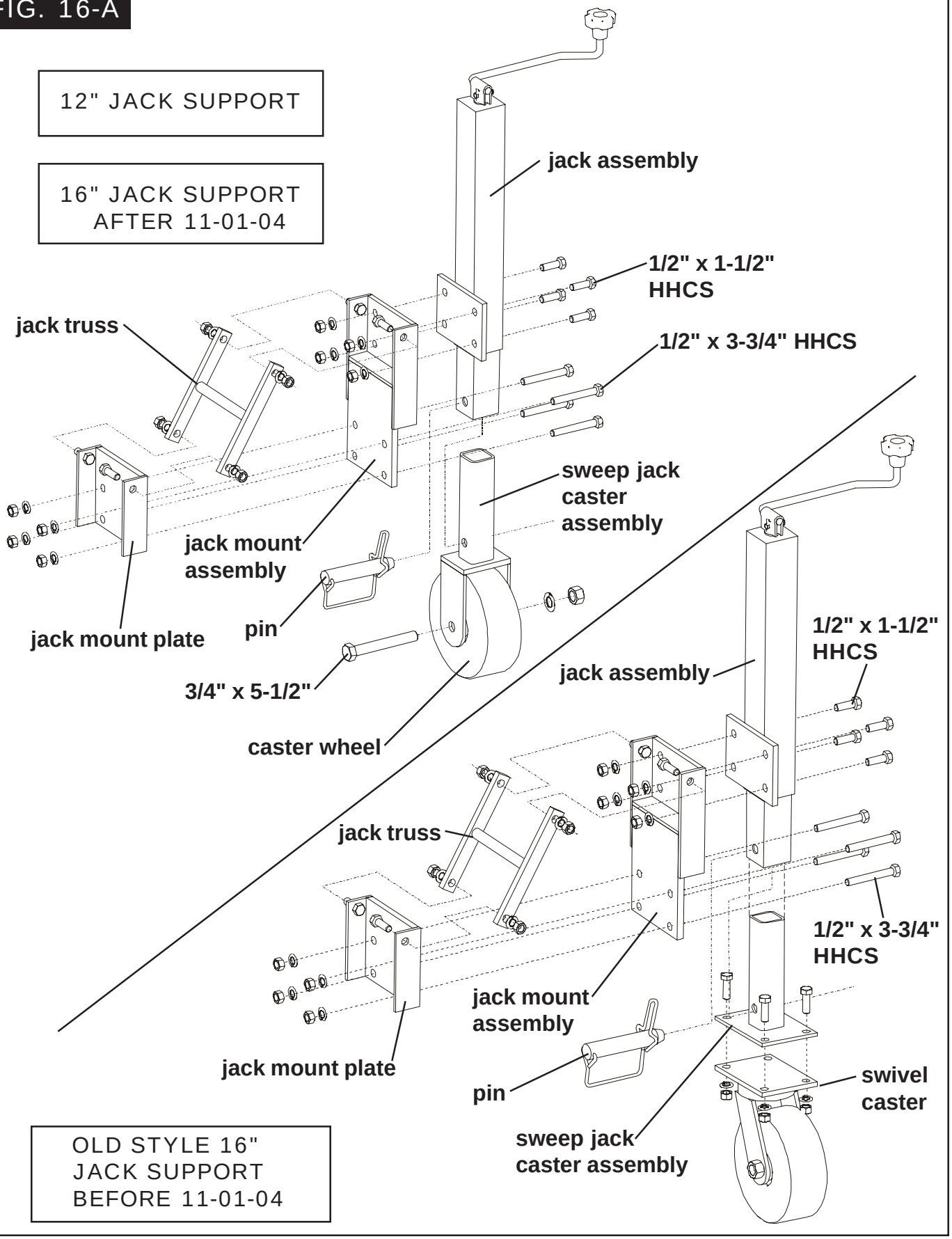
12" JACK SUPPORT
16" JACK SUPPORT AFTER 11-01-04
jack assembly
1/2" x 1-1/2" HHCS
jack truss
1/2" x 3-3/4" HHCS
sweep jack caster assembly
jack mount assembly
pin
jack mount plate
3/4" x 5-1/2"
caster wheel
jack assembly
1/2" x 1-1/2" HHCS
jack truss
1/2" x 3-3/4" HHCS
jack mount assembly
jack mount plate
pin
swivel caster
sweep jack caster assembly
OLD STYLE 16" JACK SUPPORT BEFORE 11-01-04

17. CENTER PIVOT INSTALLATION

If you are only running the cords across the floor, you may skip step 17A and go to step 17B.

A. Center Pivot With Pivot Kit

1. Use the pivot assembly supplied with the sweep pivot kit and cut it to fit, if needed.

The center pipe of the pivot assembly MUST be in the center of the bin. If it is not, the sweep could hit the bin wall.

2. Feed the multi-conductor cord through the hole in the back of the sweep head section leaving five feet (5') of cord outside the hole.

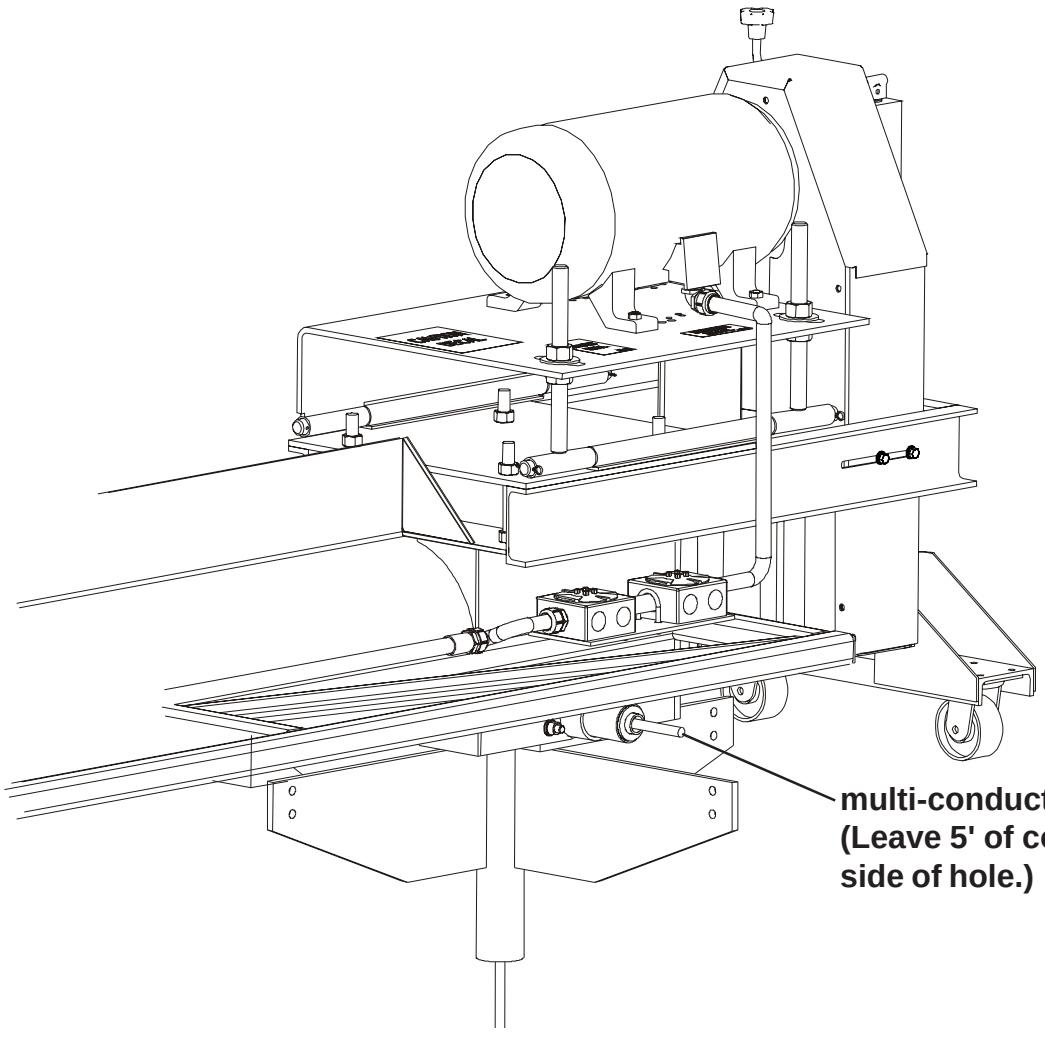

FIG. 17-A2

17. CENTER PIVOT INSTALLATION (cont.)

3. Feed the power cord through the pivot tube.

4. Align the hole in the backshield with the pivot tube and push the sweep onto the pivot tube.

5. Connect the pivot plate to the backshield using two (2) 1/2"-13 x 1-3/4" hex bolts, flat washers, lockwashers, and hex nuts.

6. Fasten the pivot rod to the backshield and pivot plate using two (2) 1/2"-13 x 2" hex bolts, lockwashers, and hex nuts.

7. Screw the 45 degree grease fitting into the pivot assembly pipe.

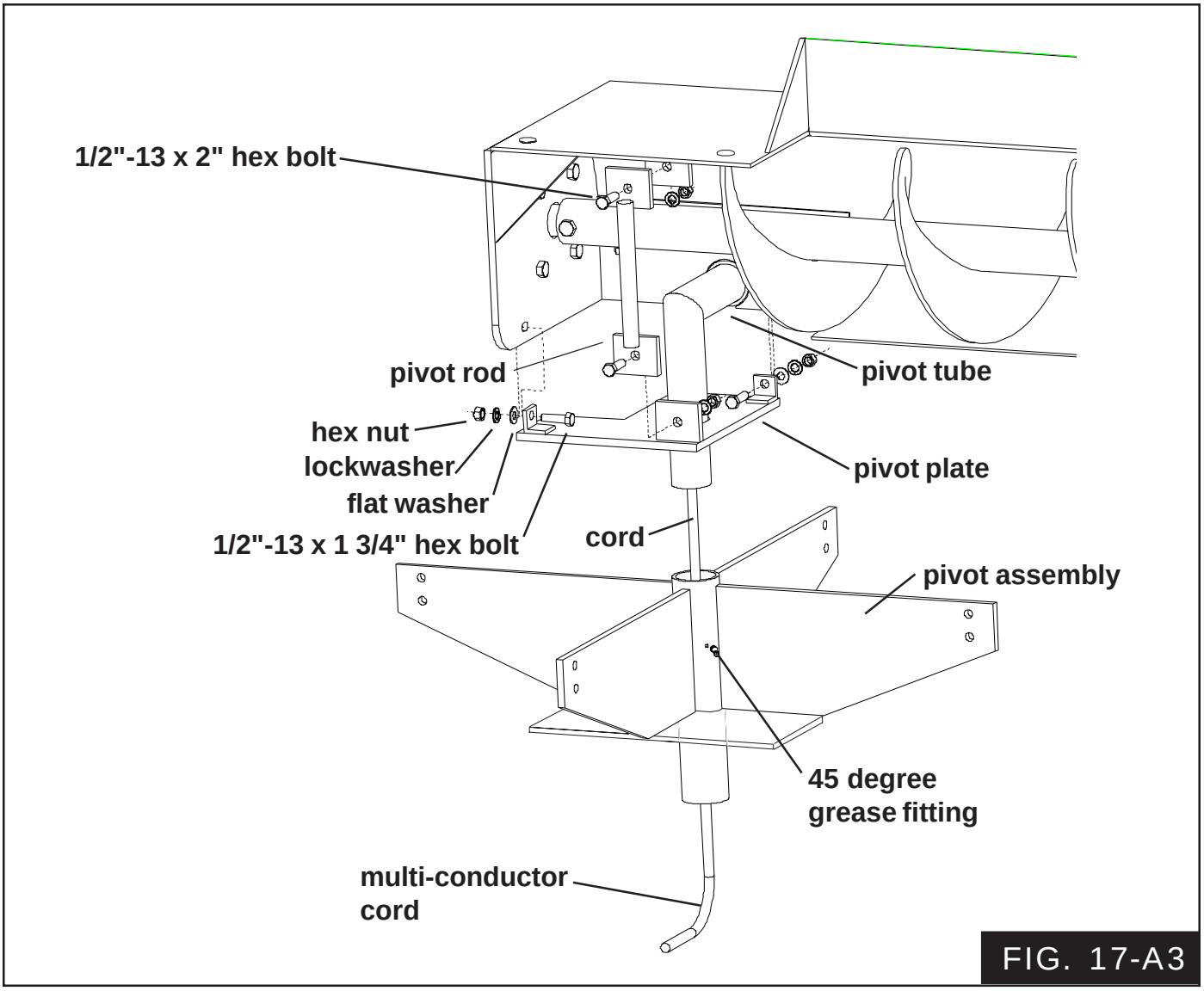

FIG. 17-A3

17. CENTER PIVOT INSTALLATION (cont.)

9. Connect the 1" x 48" liquid-tight flex conduit to the pivot tube using one (1) 1" conduit coupling and one (1) 1" liquid-tight flex conduit coupling.

10. Connect the 1" x 48" liquid-tight flex conduit to one of the junction boxes using one (1) 1" liquid-tight flex conduit coupling. Connect the leads as required.

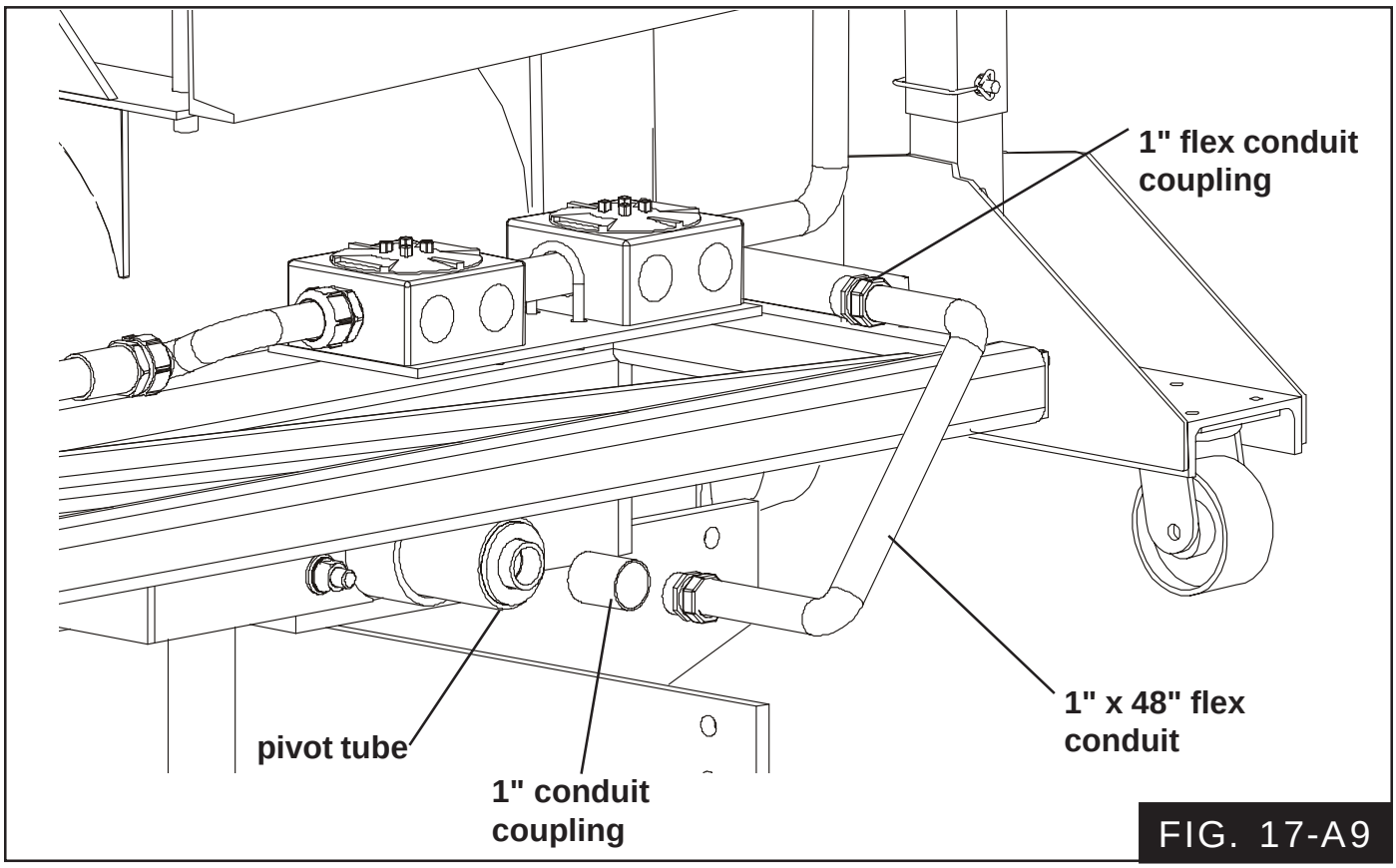

FIG. 17-A9

11. The customer is to provide proper power cord protection between the pivot assembly and the sump transition.

12. The multi-conductor power cord can be connected with the 14 AWG/3 wire, 14 AWG/4 wire, and 10 AWG/4 wire cords in an explosion proof junction box .

13. Use the plugs provided with the junction box to close the holes not being used.

14. Assemble the cord plugs to the other end of each of the cords. The 14 AWG/4 wire cord requires the "HBL2431SW" plug. The 8AWG/4 & the 10 AWG/4 wire cord requires the "CS8165C" plug. The 14 AWG/3 wire cord requires the "HBL2311SW" plug.

The plugs are different for each cord and MUST be assembled correctly. This is done so the cords can not be plugged into the control panel incorrectly.

17. CENTER PIVOT INSTALLATION (cont.)

B. Center Pivot For Standard Sweep

The center pivot for a standard sweep must be supplied by the customer. The following are requirements for installation.

The pivot pin MUST be in the center of the bin. If it is not, the sweep could hit the bin wall.

1. The cross braces must be 1/2" steel plate.

2. The pivot pin must be 1-1/2" diameter steel bar and extend approximately 4" above floor elevation.

18. CONTROL PANEL SETUP

The bin must have grain in it to be able to properly program the control panel.

The Series 2 Sweep is supplied with adjustable overlaods that are not set at the factory. These should be set slightly higher than the full load amp (FLA) value listed on the motor nameplates.

A. Find the desired "High" amp and "Low" amp set points.

1. **High Amp Set Point**: The amp load the auger draws when the auger flighting is 90% loaded. This will turn off the tractor drive motor. Initially, set the value to 90% of the Full Load Amps (FLA) listed on the motor nameplate.

2. **Low Amp Set Point:** The amp load the auger motor draws the auger flighting 10% loaded. This will turn on the drive motor. Initially, set this value to 10% over the amp draw of the sweep running empty.

NEVER program the "High Amp Set Point" greater than the full load running amps of the auger motor.

B. Programming the Amp Meter

1. Setting Input
   a. Press "PRGM" to "inPut".
   b. Press "ENTER".
   c. Press "PRGM" to "i4-20".
   d. Press "ENTER" to RUN MODE.

2. Setting Setup
   a. Press "PRGM" to "SEtuP".
   b. Press "ENTER" to "rdEC"
      Use arrow buttons to change the decimal placement. Show .0 Amps.
   c. Press "ENTER" to "SETLO"
   d. Press "ENTER"
      Value = 0.0
   e. Press "ENTER" to "SEtHi".

18. CONTROL PANEL SETUP (CONT.)

f. Press "Enter"
Value = 50
Use arrow buttons to change value.
g. Press "ENTER" to "LoCut".
This value = 0
h. Press "ENTER" to RUN MODE.

3. Setting Presets
a. Press "Pre A".
b. Press "PRGM"
This value = "High Amp Set Point".
Use arrow buttons to change value.
c. Press "ENTER".

4. Setting Relays
a. Press "PRGM" to "rELAYS".
b. Press "ENTER" to "HYS A".
c. Press "PRGM"
This value = "High Amp Set Point" - "Low Amp Set Point"
Use arrow buttons to change value.
d. Press "ENTER" to RUN MODE.

EXAMPLE: Full Load Running Amps = 21 Amps
High Amp Set Point = 20 Amps
Low Amp Set Point = 12 Amps

Then "HYS A" = 8 Amps (NOTE: This is the difference between the High Amp Set Point and the Low Amp Set Point. *[20 Amps - 12 Amps = 8 Amps]*)
And "Pre A" = 20 Amps

C. Locking the Amp Meter

1. Locking the amp meter is not required, but does prevent the meter from being tampered with once it is programmed.

2. In RUN MODE press "LOCK" three (3) times within five (5) seconds.
This value = A number that is easily remembered.
Use arrow buttons to change value.
a. Press "ENTER".

D. Unlocking the Amp Meter

1. In RUN MODE press "LOCK" three (3) times within five (5) seconds.
a. Enter the "LoC" value.
Use arrow buttons to change value.
b. Press "ENTER".

☛ **It is recommended to write down the "LoC" value and keep it in a safe place in case it is forgotten.**

1. PERFORM PRE-START CHECKS

Warning! To ensure that the drive is not unexpectedly started, turn off and lock out or tag out the power source before proceeding. Failure to observe these precautions could result in bodily injury.

Danger! Failure to perform any or all of these pre-start checks may cause damage to the equipment and/or cause SERIOUS INJURY or DEATH to those in the work area.

Failure to perform any or all of these pre-start checks may also be a misuse of the equipment. Any misuse of the equipment may void the warranty.

A. Make sure ALL shields are in place.

ALWAYS keep ALL guards and shields in place, until all the power is disconnected and locked out.

B. Inspect the drive unit for any problems or potential problems.

C. Be aware of any emergency shutdown procedures. Two (2) people must always be in a position where the operation of the equipment can be monitored.

D. Before starting the auger for the first time, make sure that all parts are assembled correctly according to the instructions in this manual.

Be sure to remove the grain from the drive chain and sprockets. If this is not done, damage can occur to the drive system.

Make certain ONLY trained operators are in the work area before operating or moving the machine. Two (2) people must always be in a position where the operation of the equipment can be monitored.

2. START THE AUGER

A. Plug the two (2) motors, foot switch, and thermal protection cords into the bottom of the control panel while making sure they are locked into the recepticles. Each plug is different and can only be plugged into one (1) receptacle to prevent accidental electric shock and/or overloads.

B. Step on the foot switch and press the "Start" button.

DO NOT start or stop the auger while it is under load.

B. Run the auger through a “break-in” period, if it is being used for the first time or for the first time of the season.

C. "Polish" the flighting by running the auger at partial capacity until it is smooth, before attempting full capacity.

Failures may occur if the auger is run full before it has been “polished” during the “break-in” period.

NEVER operate the auger empty. Operating augers empty for any length of time will cause excessive wear. NEVER operate the auger at speeds higher than recommended. Auger flight speed in excess of recommended speed causes excessive wear.

Be aware of any unusual vibration or noises during the initial start-up and “break-in” period. If anything unusual is detected, immediately shutdown the auger, and disconnect and lockout the power supply before servicing.

1. OPERATING THE SWEEP AUGER

Caution! Gear Reducer is shipped without oil. Add the proper amount of the recommended lubricant before operating. Failure to observe these precautions could result in damage to, or destruction of, the equipment.

Danger! Keep out of the bin while the bin sweep auger is in operation. The rapidly moving sweep auger can cause SERIOUS INJURY or DEATH!

The auger capacity can fluctuate greatly under varying conditions. Moisture content, different commodities, amount of foreign matter, and speeds all play a part in the performance of the auger. Twenty-five percent (25%) moisture may cut capacity by as much as 40% under some conditions.

A. Make certain there are at least two (2) people in the work area to monitor operations at all times.

B. Start the bin unloading equipment before starting the bin sweep auger.

Be alert for any unusual vibrations, noises, and the loosening of any fasteners. If anything unusual is detected, immediately shutdown the auger, disconnect and lockout the power source before servicing.

C. Shutdown the auger as soon as the bin is empty.

D. Consideration should be given to the proper size auger for any intermittent type operations. When augers are stopped and restarted under full load, it may result in damage to the auger. Using a larger diameter auger and reducing its load level will be far better than subjecting a smaller diameter auger to big loads. If an auger is kept from absolute filling, it will make start-up easier and will convey more efficiently.

1. OPERATING THE SWEEP AUGER (cont.)

NEVER enter the bin while the bin sweep is in operation.

NEVER attempt to control the operation of the bin sweep by depressing the operating controls with shovels, brooms or any other objects.

DO NOT attempt to restrain movement of the bin sweep with ropes, bars or other devices.

NEVER allow an operator to attempt to manually restrain the bin sweep.

2. OPERATING THE SWEEP AUGER CONTROL PANEL

A. The sweep operates in two (2) different "modes".

1. Automatic (The auger motor runs and the drive motor runs using the Amp Meter in the control panel.)

   Step on the footswitch and press the "Start" button. The auger motor will turn on and the drive motor will turn on only if the Amp Meter reaches the "Low" set point.

2. Manual (Overrides the Amp Meter and allows the operator to manually move the sweep.)
   a. Idle (Allows the auger motor to run, but does not move the sweep forward or reverse.)
   b. Forward (Auger motor will run and moves the sweep towards the grain.)
   c. Reverse (Stops the auger motor and moves the sweep away from the grain.)

   Step on the footswitch and press the "Start" button. The auger motor will turn, but the sweep will not move. Turn the "Manual" switch to "Forward" and the sweep will move forward towards the grain. Turn the "Manual" switch to "Reverse" and the auger motor will shut off and move the sweep backwards away from the grain.

   The "Start" button MUST be pressed to start the auger motor again.

The footswitch MUST be depressed and the thermal protection cord plugged in before the sweep will operate.

1. NORMAL SHUTDOWN

A. Before shutting down the unit, be sure the sumps and unload conveyor are empty.

B. Press the “Stop” button on the control panel.

2. EMERGENCY SHUTDOWN

A. Know how to shut down the auger in case of an emergency.

B. Step off the footswitch and press the “Stop” button.

C. Disconnect and lockout the power source.

NEVER start the equipment under load. Doing so may cause damage. This type of damage is considered a misuse of the equipment. Any misuse of the equipment may void the warranty.

3. STORAGE PREPARATION

A. Be sure the sumps and unload conveyor are empty.

B. Close the sump control gates.

C. Park the sweep behind the intermediate sumps, so that the sumps are on the auger side of the sweep.

D. Shut down the auger.

E. Make sure all fasteners are tight.

F. Cover the motors with the tarps supplied with the sweep after first allowing the motors to cool down.

G. Place blocks under the frame of the sweep to help support the sweep during storage.

1. MAINTAIN THE AUGER

ALWAYS shut down and disconnect the power supply before adjusting, servicing or cleaning the equipment.

A. Use caution when repairing or replacing equipment parts.

B. Make sure ALL decals are legible and tightly attached to the auger. If necessary, replace them **FREE OF CHARGE** by contacting GSI at:

GSI
P.O. Box 20
1004 E. Illinois St.
Assumption, IL 62510
(217) 226-4421

C. Ensure that ALL electric motors, etc. are operating at the proper speed.

D. Make sure ALL electrical wiring is not damaged, and that it meets proper wiring codes.

E Make sure ALL components are in good working condition before use.

Caution! ALL SPEED REDUCERS ARE SHIPPED DRY. OIL MUST BE ADDED PRIOR TO OPERATION. Do not operate the unit without making sure it contains the correct amount of oil. Do not overfill or underfill with oil, or injury to personnel, unit, or other equipment may result.

Caution! Do not mix non-synthetic and synthetic oil in the unit.

2. LUBRICATION

A. LUBRICATION – ELECTRIC MOTORS

Electric motors supplied for use on Series 2 Sweeps are properly lubricated at the time of their manufacture. It is not necessary to lubricate them at the time of installation unless the motor has been in storage for a long period of time, 1 year or longer. Some motors may be factory lubricated and sealed for the life of the bearings. Overgreasing the bearings can cause premature failure of the motor. The amount of grease added must be carefully controlled.

B. PROCEDURE FOR LUBRICATION OF ELECTRIC MOTORS

1.) Stop motor. Disconnect and lock out of service.
2.) Follow all safe bin entry procedures and wear all required personal protective equipment.
3.) Remove contaminants from grease inlet area.
4.) Remove filler and drain plugs.
5.) Check filler and drain holes for blockage and clean as necessary.
6.) Add proper type and amount of grease. See the following chart for amount of lubricant. Too much grease or injecting grease too quickly can cause premature bearing failure. Take one minute or so to slowly inject the recommended amount of grease.
7.) Wipe off excess grease and replace filler and drain plugs. Do not run motor without the grease and drain plugs installed.

Note: It is very important to keep the grease clean. Mixing dissimilar grease is not recommended.

C. TYPE OF LUBRICATION

A polyurea mineral oil NGLI grade 2 type grease is to be used for lubrication of the electric motors. Grease meeting this specification include:

1.) Chevron	SRI #2
2.) Exxon-Mobile	Polyrex EM
3.) Texaco	Polystar RB

D. FREQUENCY OF LUBRICATION

Motors should be relubricated after storage of one year or more or at the beginning of each season. The following chart gives the amount of grease to be added.

2. LUBRICATION (CONT.)

Lubrication - Electric Motors
Quantity of Grease per Frame Size

For Baldor Brand Electric Motors		
NEMA	Volume	
Frame Size	cu. In.	fluid oz
56C		
143TC	0.25	0.14
182TC	0.5	0.28
184TC	0.5	0.28
213T	0.75	0.42
215T	0.75	0.42
254T	1	0.55
256T	1	0.55
284T	1.25	0.69
286T	1.25	0.69
324T	1.5	0.83

For Marathon Brand Electric Motors				
NEMA	Volume			
Frame Size	cu. In.	ounce	gram	teaspoon
56C				
143TC	0.6	0.3	8.4	2
182TC	0.6	0.3	8.4	2
184TC	0.6	0.3	8.4	2
213T	0.6	0.3	8.4	2
215T	0.6	0.3	8.4	2
254T	1.2	0.61	17.4	3.9
256T	1.2	0.61	17.4	3.9
284T	1.2	0.61	17.4	3.9
286T	1.2	0.61	17.4	3.9
324T	1.5	0.81	23.1	5.2

2. LUBRICATION (CONT.)

E. Lubrication – Reducers (Gear Boxes)

Reducers supplied for use on Series 2 Sweeps are shipped without lubricant (dry). The proper lubricant must be added at the time of installation. Over lubrication may cause premature failure of the reducer. The amount of lubricant must be carefully controlled.

F. Procedure for Initial Filling of Reducers

1.) Disconnect and lock motor out of service. Do not run gearbox without lubricant.
2.) Follow all safe bin entry procedures and wear all required personal protective equipment.
3.) Remove contaminants from inlet area.
4.) Remove filler and oil level fill plugs.
5.) Check filler holes for blockage and clean as necessary.
6.) Clean the magnetic drain plug if one was supplied.
7.) Add proper type of lubricant to fill level or until oil runs out of oil level fill hole. See the lubrication chart for amounts and types of lubricant.
8.) Wipe off excess lubricant and replace filler and oil level fill plugs.

NOTE: It is very important to keep the lubricant clean. Also, mixing dissimilar lubricants is not recommended.

G. Procedure for Changing of Lubricant

1.) Stop motor. Disconnect and lock out of service.
2.) Follow all safe bin entry procedures and wear all required personal protective equipment.
3.) Remove contaminants from inlet and drain area.
4.) Remove filler, oil level fill, and drain plugs. Drain old lubricant from reducer.
5.) Flush reducer with a nonflammable solvent such as Lubriplate Pure Flush or Whitmore's Flushing Oil.
6.) Clean the magnetic drain plug if installed.
7.) Carefully replace drain plug.
8.) Add proper type of lubricant to fill level or until oil runs out of oil level fill hole. See the lubrication chart for amounts and types of lubricant.
9.) Wipe off excess lubricant and replace filler and oil level fill plugs.

NOTE: It is very important to keep the lubricant clean. Also, mixing dissimilar lubricants is not recommended.

H. Frequency of Lubrication

Lubricant should be changed after storage of one year or more or at the beginning of each season.

I. Type of Lubrication

The type and quantity of lubrication required, for each type and size of reducer, is listed in the following chart.

2. LUBRICATION (CONT.)

Lubrication - Gear Boxes
Quantity and Type of Lubricant per Box Size

Foote-Jones (Screw Drive) Reducer		
Box Size	**Volume**	
	Quarts	**Liters**
8115	0.75	0.7
8203	1	0.95
8207	1.5	1.4
Lubrication Specification		
	Temp 15-60 deg F.	**Temp 50-125 deg F**
	AGMA 3	**AGMA 4**
Chevron Oil Company	OC Turb. Oil 100	EP Machine Oil 150
Exxon Oil Company	Terrestic 100	Terrestic 150
Marathon Oil Company	Endurance Oil 30	Endurance Oil 40
Mobile Oil company	DTE-18M	DTE Oil Extra Heavy
	Or Equal	

Hub City (Tractor Drive) Reducer		
Box Series	**Volume**	
	Pints Worm Top	**Pints Worm Bottom**
320	2.65	1.9
380	3.9	3.2
Lubrication Specification		
Mobile	SHC634-SYNTHETIC	
	Or Equal	

EPT Browning (Screw Drive)		
Box Size	**Volume (Quarts)**	
107-09	2 Approx.	
115-09	2.56 Approx.	
203-09	4 Approx.	
207-09	6.3 Approx.	
215-09	9 Approx.	
Lubrication Specification		
Mineral Oil	Temp 15-60 deg F.	Temp 50-125 deg F
	AGMA 4	AGMA 5
Mobile Oil company	DTE Oil Extra Heavy	DTE-Oil BB

Synthetic Oil	Temp 0-90 deg F.	Temp 15-125 deg F
	AGMA 4	AGMA 5
Mobile Oil company	Mobile SHC 629	Mobile SHC 630

2. LUBRICATION (CONT.)

J. LUBRICATION – BEARINGS, CASTERS, JACKS

The flange bearings, pillow block bearings, and casters supplied for use on Series 2 Sweeps are shipped from the factory lubricated. From time to time a small amount of the proper lubricant must be added. Over lubrication may cause premature failure of the components.

K. PROCEDURE FOR LUBRICATING FLANGE AND PILLOW BLOCK BEARINGS

1.) Disconnect and lock motors out of service.
2.) Follow all safe bin entry procedures and wear all required personal protective equipment.
3.) Remove contaminants from the grease zerk and surrounding area.
4.) Add proper type of lubricant. See the lubrication chart for types of lubricant.
5.) Wipe off excess lubricant.

NOTE: It is very important to keep the lubricant clean.

L. PROCEDURE FOR LUBRICATING CASTERS.

1.) Disconnect and lock motors out of service.
2.) Follow all safe bin entry procedures and wear all required personal protective equipment.
3.) Remove contaminants from the grease zerk and surrounding area.
4.) Add proper type of lubricant. See the lubrication chart for the types of lubricant.
5.) Wipe off excess lubricant.

NOTE: It is very important to keep the lubricant clean.

M. PROCEDURE FOR LUBRICATING JACKS

1.) Disconnect and lock motors out of service.
2.) Follow all safe bin entry procedures and wear all required personal protective equipment.
3.) Lubricate the gears using the grease zerk at the top of the jack. Rotate the jack handle to distribute the grease.
4.) Lightly grease the inner tube of the jack using the same type grease.
5.) Apply a light weight oil to the handle unit at both sides of the tube.
6.) Apply a light weight oil to the small hole at the upper end of the jack to lubricate the nut and screw assembly.

N. FREQUENCY OF LUBRICATION

The tractor drive pillow block bearings and the end flange bearing, along with the casters, should be lubricated after each use of the Series 2 Sweep. If possible, lubricate all the components at the beginning of each season, or after long term storage.

O. TYPE OF LUBRICATION

The type of lubrication required, for each component, is listed in the following chart.

2. LUBRICATION (CONT.)

Lubrication - Bearings, Casters and Misc. Equipment Type of Lubricant		
Equipment	**Lubrication Specification**	
Tractor Drive Pillow Blocks	Shell Oil Company	Alvania #2 **(or equivalent)**
End Flange Bearing	Shell Oil Company	Alvania #2 **(or equivalent)**
Nylon Flight Bearings	**None Required**	**None Required**
Head End Casters	Shell Oil Company	Alvania #2 **(or equivalent)**
Jack Casters	Shell Oil Company	Alvania #2 **(or equivalent)**
Jacks	Shell Oil Company	Alvania #2 **(or equivalent)**

Caution! Too much oil will cause overheating and too little will result in gear failure. Check oil level regularly.

Caution! Extreme pressure (EP) lubricants are not recommended for average operating conditions. Failure to observe these precautions could result in damage to, or destruction of, the equipment.

Under extreme operating conditions, such as rapid rise and fall of temperatures, dust, dirt, chemical particles, chemical fumes, or oil sump temperatures above 200°F, the oil should be changed every one to three months, depending on severity of conditions.

Caution! If the unit is used in the food or drug industry (including animal food) consult the petroleum supplier for recommendations on lubricants which meet the specifications of the FDA, USDA, and/or other authoritative bodies having jurisdiction. Standard lubricants are not suitable for these applications or these industries.

The pour point of the lubricant selected should be at least 10°F lower than the expected minimum ambient starting temperature. Extreme pressure (EP) lubricants are not recommended for average operating conditions.

Warning! Oil, housings, and other components can reach high temperatures during operation, and can cause severe burns. Use extreme care when removing lubrication plugs and vents while servicing the unit.

1. CONTROL PANEL SCHEMATIC (460/3/60)

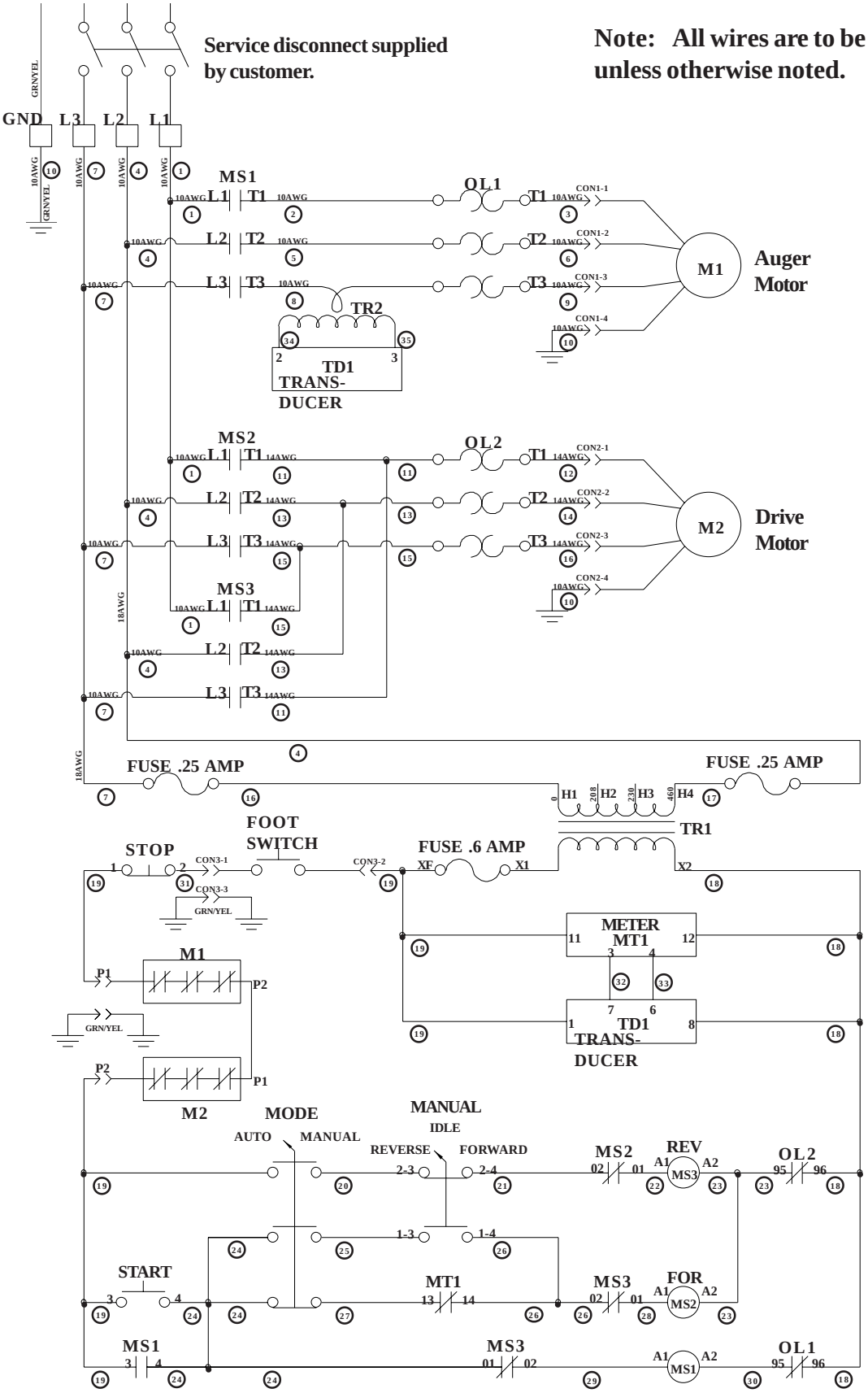

2. CONTROL PANEL SCHEMATIC (230/3/60)

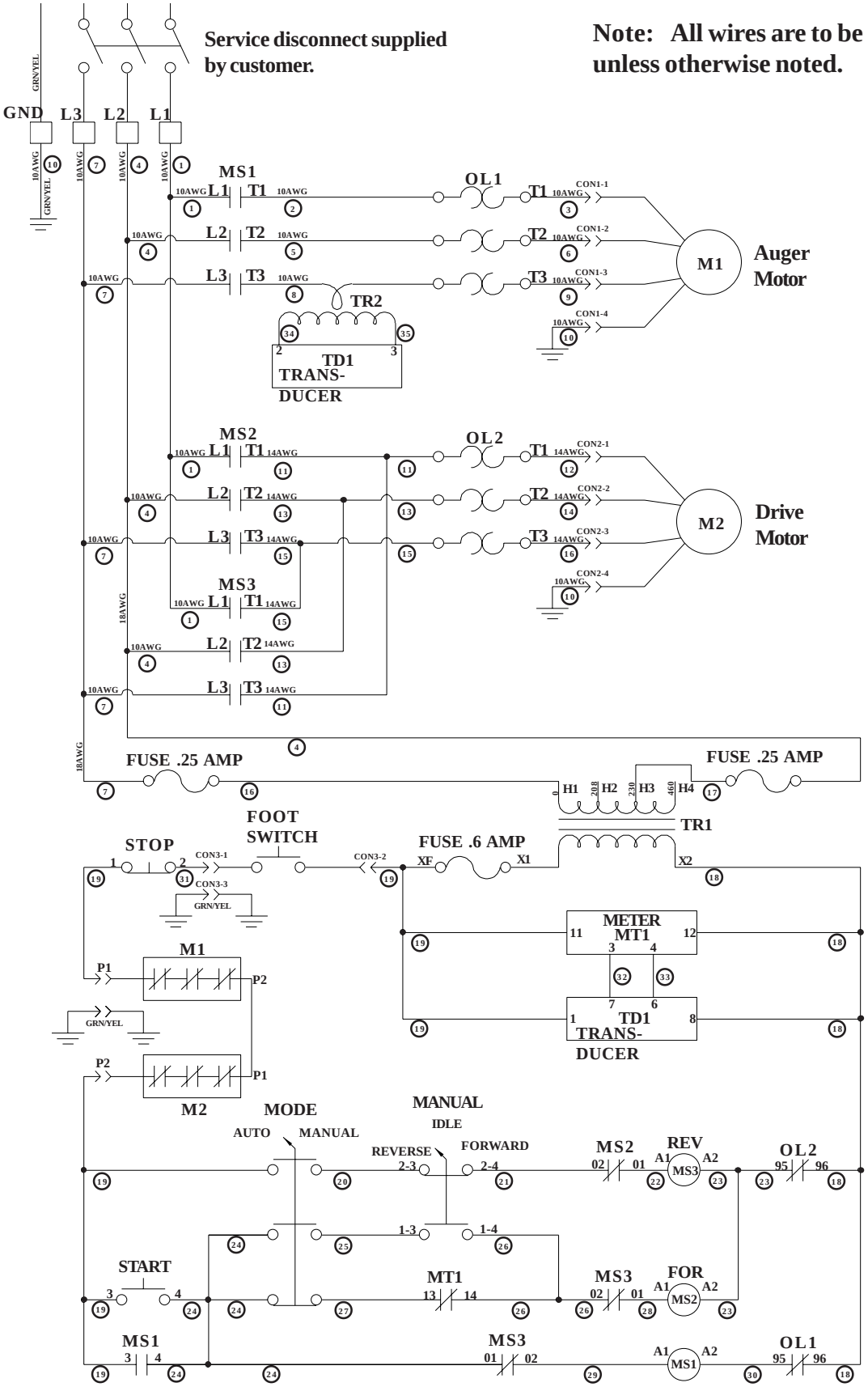

3. CONTROL PANEL SCHEMATIC (380/3/50)

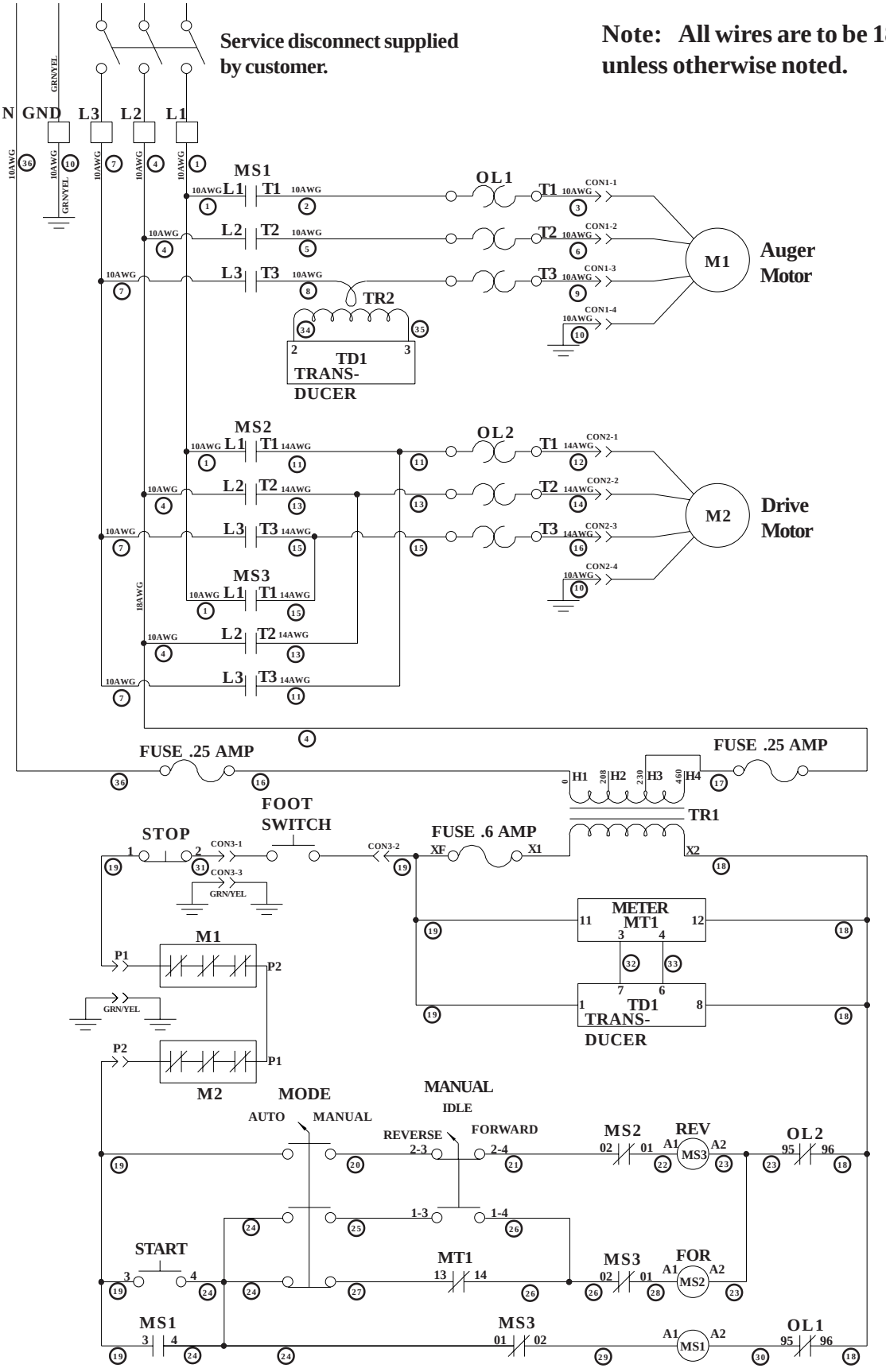

Problem	Possible Cause	Solution
1 Sweep will not run.	a.) Power cords may be unplugged.	a.) Plug in the power cords.
	b.) Foot switch may not be actuated.	b.) Make sure the foot switch is depressed and the switch is operating properly.
	c.) Overloads may be tripped.	c.) Reset the overloads.
	d.) Adjustable overloads not set correctly	d.) Set overload to value listed on motor name plate for Full Load Amps.
2 Low capacity.	a.) The auger may not be fully loaded.	a.) Make sure the grain is flowing into the auger, making it fully loaded.
	b.) The auger is moving too slowly.	b.) Check the auger speed. Low capacity will result from speeds slower than recommended.
3 Sweep will not move around the bin.	a.) The control panel may not be in "Automatic Mode".	a.) Turn the switch to "Automatic Mode".
	b.) Tha amp meter is not properly adjusted.	b.) Set the amp meter so the running amps of the auger motor will turn on the drive motor.
	c.) The drive chain may be broken.	c.) Repair the drive chain.
4 The sweep is vibrating.	a.) The auger may have foreign materials in it.	a.) Remove the foreign material.
	b.) The hanger bearings may be worn.	b.) Replace the hanger bearing.
	c.) The flight connections may be loose.	c.) Tighten all of the flight connecting bolts.
	d.) The flighting may be worn.	d.) Replace all the flighting sections that are worn.

MAIN AUGER COMPONENTS

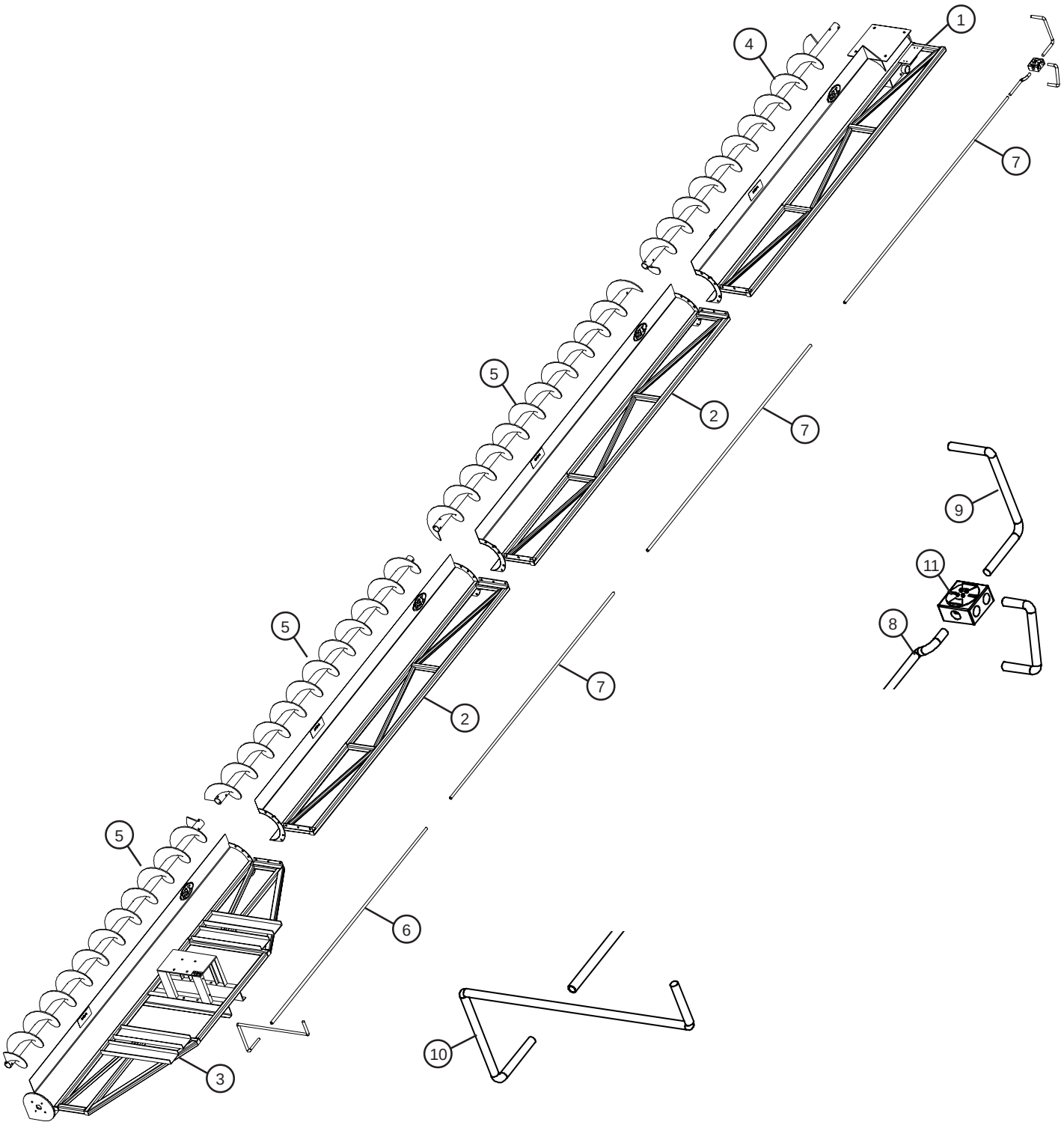

MAIN AUGER COMPONENTS

Ref #	Part #	Description
1	GC07282	S2 Sweep Head Section 12" X 60" Std
	GC07250	S2 Sweep Head Section 12" X 72" Std
	GC07251	S2 Sweep Head Section 12" X 84" Std
	GC07252	S2 Sweep Head Section 12" X 96" Std
	GC07253	S2 Sweep Head Section 12" X 108" Std
	GC10319	S2 Sweep Head Section 12" X 120" Std
	GC07125	S2 Sweep Head Section 12" X 132" Std
	GC07079	S2 Sweep Head Section 12" X 144" Std
	GC07254	S2 Sweep Head Section 12" X 60" Pvt
	GC07255	S2 Sweep Head Section 12" X 72" Pvt
	GC07256	S2 Sweep Head Section 12" X 84" Pvt
	GC07531	S2 Sweep Head Section 12" X 96" Pvt
	GC07258	S2 Sweep Head Section 12" X 108" Pvt
	GC10320	S2 Sweep Head Section 12" X 120" Pvt
	GC07077	S2 Sweep Head Section 12" X 132" Pvt
	GC07078	S2 Sweep Head Section 12" X 144" Pvt
	GC07285	S2 Sweep Head Section 16" X 60" Std
	GC07260	S2 Sweep Head Section 16" X 72" Std
	GC07261	S2 Sweep Head Section 16" X 84" Std
	GC07262	S2 Sweep Head Section 16" X 96" Std
	GC07263	S2 Sweep Head Section 16" X 108" Std
	GC10822	S2 Sweep Head Section 16" X 120" Std
	GC07264	S2 Sweep Head Section 16" X 132" Std
	GC07081	S2 Sweep Head Section 16" X 144" Std
	GC07265	S2 Sweep Head Section 16" X 60" Pvt
	GC07266	S2 Sweep Head Section 16" X 72" Pvt
	GC07267	S2 Sweep Head Section 16" X 84" Pvt
	GC07268	S2 Sweep Head Section 16" X 96" Pvt
	GC07269	S2 Sweep Head Section 16" X 108" Pvt
	GC10823	S2 Sweep Head Section 16" X 120" Pvt
	GC07270	S2 Sweep Head Section 16" X 132" Pvt
	GC07080	S2 Sweep Head Section 16" X 144" Pvt
2	GC07061	S2 Sweep Inter. Section 12" X 60"
	GC07062	S2 Sweep Inter. Section 12" X 72"
	GC07063	S2 Sweep Inter. Section 12" X 84"
	GC07064	S2 Sweep Inter. Section 12" X 96"
	GC07065	S2 Sweep Inter. Section 12" X 108"
	GC07066	S2 Sweep Inter. Section 12" X 120"
	GC07067	S2 Sweep Inter. Section 12" X 132"
	GC07068	S2 Sweep Inter. Section 12" X 144"
	GC07069	S2 Sweep Inter. Section 16" X 60"
	GC07070	S2 Sweep Inter. Section 16" X 72"
	GC07071	S2 Sweep Inter. Section 16" X 84"
	GC07072	S2 Sweep Inter. Section 16" X 96"
	GC07073	S2 Sweep Inter. Section 16" X 108"
	GC07074	S2 Sweep Inter. Section 16" X 120"
	GC07075	S2 Sweep Inter. Section 16" X 132"
	GC07076	S2 Sweep Inter. Section 16" X 144"
3	GC10193	S2 Sweep Tail Section 12" X Std
	GC10194	S2 Sweep Tail Section 12" X Ext
	GC10191	S2 Sweep Tail Section 16" X Std
	GC10192	S2 Sweep Tail Section 16" X Ext
N/S	GC07086	S2 Sweep Ext Section 12" X 48"
	GC07271	S2 Sweep Ext Section 12" X 84"
	GC07272	S2 Sweep Ext Section 12" X 132"
	GC07160	S2 Sweep Ext Section 16" X 48"
	GC07087	S2 Sweep Ext Section 16" X 84"
	GC07273	S2 Sweep Ext Section 16" X 132"

Ref #	Part #	Description
4	GC06608	S2 Sweep Head Flight 12" X 56 3/4"
	GC06609	S2 Sweep Head Flight 12" X 68 3/4"
	GC06610	S2 Sweep Head Flight 12" X 80 3/4"
	GC07528	S2 Sweep Head Flight 12" X 92 3/4"
	GC06612	S2 Sweep Head Flight 12" X 104 3/4"
	GC06613	S2 Sweep Head Flight 12" X 116 3/4"
	GC06614	S2 Sweep Head Flight 12" X 128 3/4"
	GC06465	S2 Sweep Head Flight 12" X 140 3/4"
	GC06755	S2 Sweep Head Flight 16" X 55 5/8"
	GC06757	S2 Sweep Head Flight 16" X 67 5/8"
	GC06758	S2 Sweep Head Flight 16" X 79 5/8"
	GC06760	S2 Sweep Head Flight 16" X 91 5/8"
	GC06759	S2 Sweep Head Flight 16" X 103 5/8"
	GC06761	S2 Sweep Head Flight 16" X 115 5/8"
	GC06756	S2 Sweep Head Flight 16" X 127 5/8"
	GC06637	S2 Sweep Head Flight 16" X 139 5/8"
5	GC06622	S2 Sweep Inter. Flight 12" X 58"
	GC06623	S2 Sweep Inter. Flight 12" X 70"
	GC06624	S2 Sweep Inter./Ext Flight 12" X 82"
	GC06582	S2 Sweep Inter. Flight 12" X 94"
	GC06626	S2 Sweep Inter. Flight 12" X 106"
	GC06627	S2 Sweep Inter. Flight 12" X 118"
	GC06467	S2 Sweep Inter./Ext Flight 12" X 130"
	GC06466	S2 Sweep Inter./Tail Flight 12" X 142"
	GC06762	S2 Sweep Inter. Flight 16" X 57"
	GC06764	S2 Sweep Inter. Flight 16" X 69"
	GC06768	S2 Sweep Inter./Ext Flight 16" X 81"
	GC06638	S2 Sweep Inter. Flight 16" X 93"
	GC06763	S2 Sweep Inter. Flight 16" X 105"
	GC06766	S2 Sweep Inter. Flight 16" X 117"
	GC06644	S2 Sweep Inter./Ext Flight 16" X 129"
	GC06639	S2 Sweep Inter./Tail Flight 16" X 141"
N/S	GC06468	S2 Sweep Ext Flight 12" X 46"
	GC06767	S2 Sweep Ext Flight 16" X 45"
6	GC06722	Conduit 3/4" Rigid X 12"
	GC07533	Conduit 3/4" Rigid X 24"
	GC09815	Conduit 3/4" Rigid X 36"
	GC06934	Conduit 3/4" Rigid X 48"
	GC03798	Conduit 3/4" Rigid X 60"
	GC06075	Conduit 3/4" Rigid X 72"
	GC06877	Conduit 3/4" Rigid X 84"
	GC03492	Conduit 3/4" Rigid X 96"
	GC03797	Conduit 3/4" Rigid X 108"
7	S-6197	Conduit 3/4" Rigid X 120"
8	GC07523	Conduit 3/4" Flex X 12"
9	GC04862	Conduit 3/4" Flex X 40"
10	GC03800	Conduit 3/4" Flex X 48
N/S	S-6196	Conduit Coupling X 3/4"
N/S	S-6198	Conduit Coupling Flex X 3/4"
N/S	S-8411	Conduit Clamp 1 Hole ZN 1"
N/S	S-4422	Conduit Flex 90D Elbow X 3/4"
N/S	S-8513	Conduit Reducer Bushg 1" to 3/4"
N/S	GC07744	Conduit Nipple 1" x 4 3/4"
N/S	1EL0428	Connector Cord (8/4 Cable) 3/4" x 7/8"
N/S	S-4284	Connector Cord (10/4Cable) 5/8 to 3/4"
N/S	S-4283	Connector Cord (14/4Cable) 1/4 to 5/8"
11	GC07521	Junction Box-Expl Proof

FLIGHT CONNECTION COMPONENTS

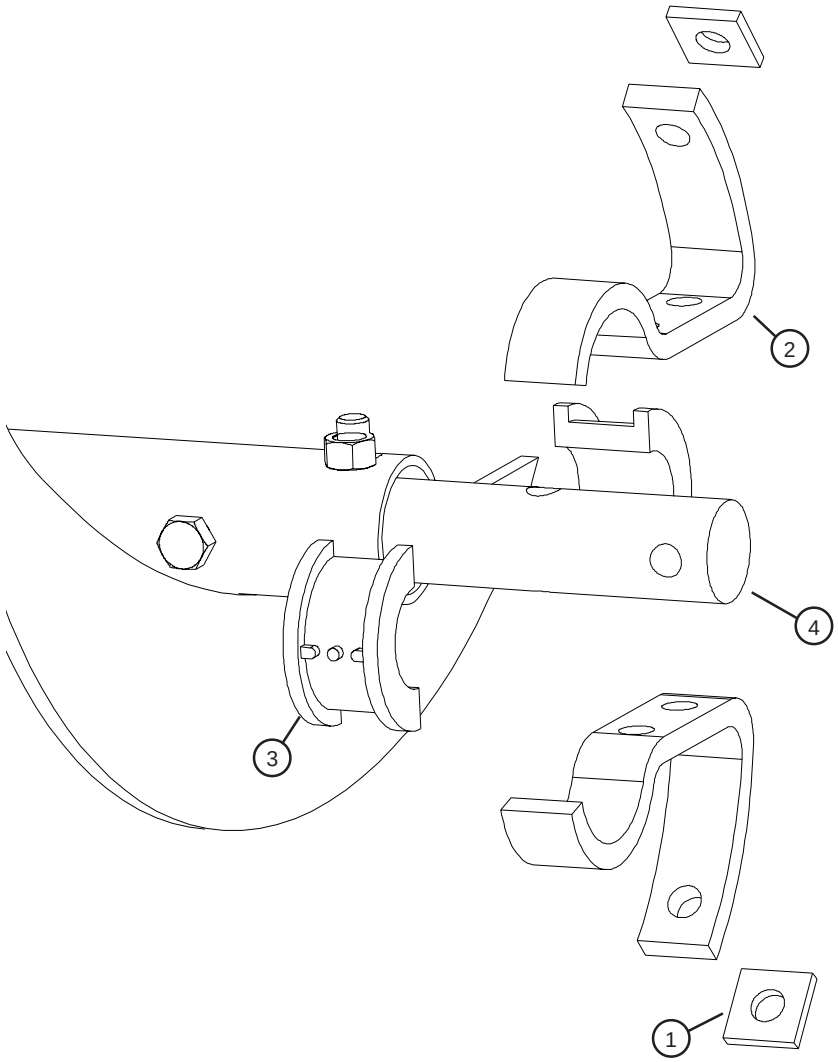

Ref. #	Part #	Description
1	S-8423	Washer, Flat Square 5/8" ZN
2	GC06000	Hanger Bracket, 2" (12" Sweeps)
	GC04064	Hanger Bracket, 3" (16" Sweeps)
3	GC07701	Nylon Bearing Insert Half 2" (12" Sweeps)
	GC07702	Nylon Bearing Insert Half 3" (16" Sweeps)
4	GC03956	Connecting Stub 2" x 11 1/2" (12" Sweeps)
N/S	S-7011	Bolt HHCS 5/8"-11 x 3 1/2" ZN GR8 (12" Flighting)
N/S	S-6494	Nut Lock 5/8"-11 ZN GR2 (12" Flighting)
4	GC03559	Connecting Stub 3" x 13" (16" Sweeps)
N/S	S-6638	Bolt HHCS 3/4"-10 X 5 1/2" ZN GR8 (16" Flighting)
N/S	S-6639	Nut Lock 3/4"-10 ZN GR2 (16" Flighting)

END BEARING COMPONENTS

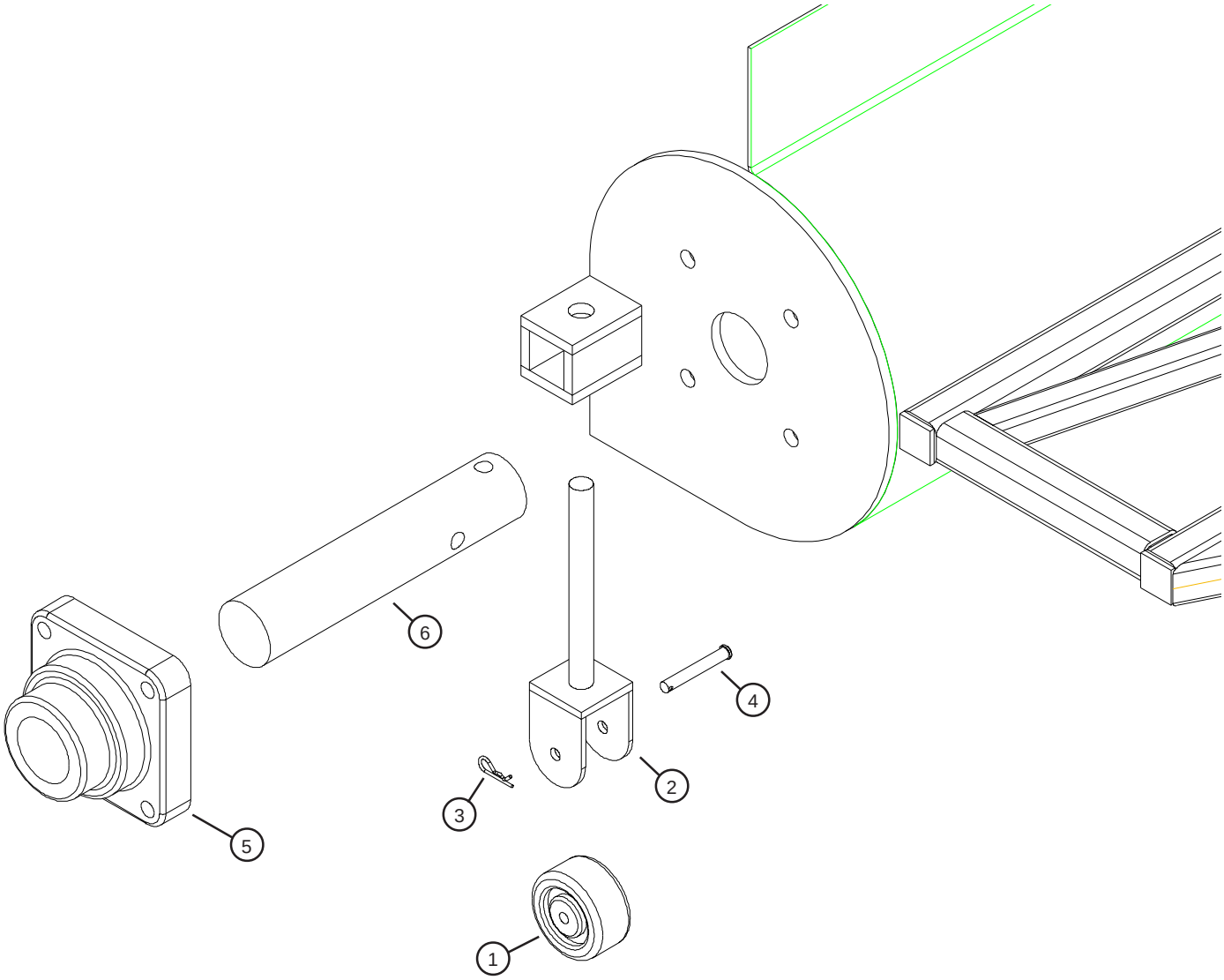

Ref. #	Part #	Description
1	GC03385	Caster 2" x 4" x 1/2" Axle (16" Sweeps)
2	GC03480	End Caster Assembly (16" Sweeps)
3	GC03387	Hairpin, 1 15/16" x .125" Wire (16" Sweeps)
4	GK1522	Washer Head Pin 1/2" Dia. x 3 1/2" (16" Sweeps)
5	GC06870	Flange Bearing 2" End Cap (12" Sweeps)
	GC03577	Flange Bearing 3" End Cap (16" Sweeps)
6	GC03957	End Stub 2" x 12" (12" Sweeps)
	GC03556	End Stub 3" x 14 7/8" (16" Sweeps)

AUGER DRIVE COMPONENTS

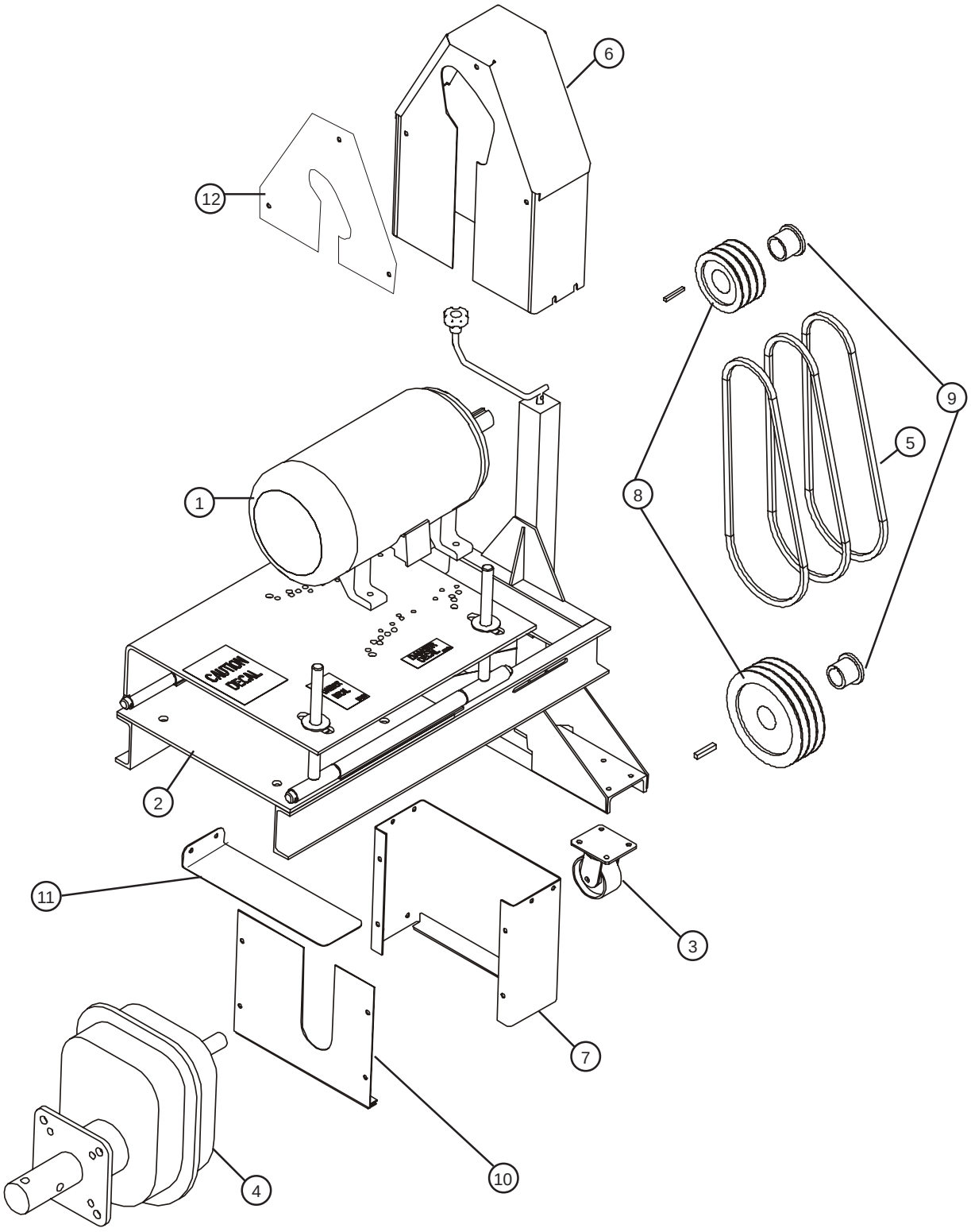

AUGER DRIVE COMPONENTS

Ref #	Part #	Description
1	NA	Motor:XPFC, Class 2 Group F & G
	GK3663	7.5 hp - 213T Frame
	GK3655	10 hp - 215T Frame
	GK3536	15 hp - 254T Frame
	GK3659	20 hp - 256T Frame
	GK4023	25 hp - 284T Frame
2	GC09993	Motor Mount Assembly w/Jack
	GC09986	Motor Mount Base Assembly
	GC09992	Motor Jack Assembly
3	GC03436	Swivel Caster 1 1/2" x 4"
4	NA	Reducer:w/CEMA Adapter and Output Shaft
	GC09585	107 - 2"
	GC09587	203 - 2"
	GC09809	115 - 2"
	GC09586	107 - 3"
	GC09810	115 - 3"
	GC09588	203 - 3"
	GC09589	207 - 3"
	GC09591	215 - 3"
5	NA	Belt BX Style
6	GC09770	Belt Guard Assembly, Top
7	GC09764	Belt Guard Assembly, Bottom
8	NA	Sheave
9	NA	QD Bushing
N/S	GC03654	Motor Cover 39" x 35" x 20"
10	GC09762	Belt Guard Bottom Back Plate
11	GC09759	Belt Guard Bottom Pan
12	N/A	Belt Guard Motor Specific Plate
	GC09875	184T Frame
	GC09876	213/215T Frames
	GC09877	254/256T Frames
	GC09878	284/286T Frames
	GC09879	324T Frame

DRIVE ASSEMBLY

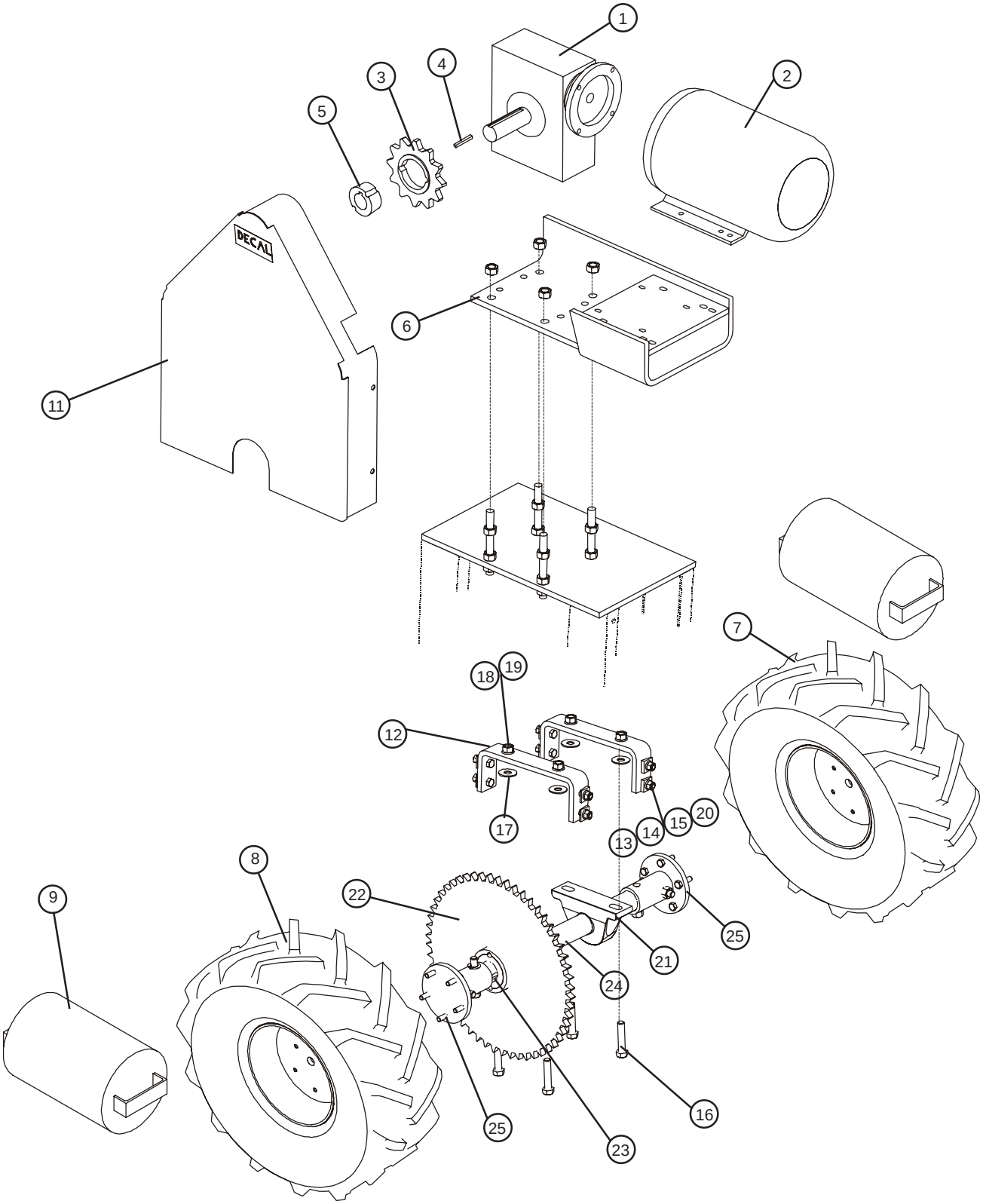

DRIVE ASSEMBLY

Item #	P/N	Qty	Description
1	GC06631	1	Reducer, 324 Model, 40:1 Style B, 56C Frame (Used with 1 HP Motors, 56C Frame)
	GC03651	1	Reducer, 384 Model, 40:1 Style B, 143TC Frame (Used with 2 HP Motors, 143TC Frame)
	GC06477	1	Reducer, 384 Model, 40:1 Style B, 182TC Frame (Used with 3 HP Motors, 182TC Frame)
2	GC09775	1	Motor: XPFC, Class 2 Group F & G, 1 HP 1760 RPM 460/3/60 56C Frame w/Feet
	GC09743	1	Motor: XPFC, Class 2 Group F & G, 2 HP 1760 RPM 460/3/60 143TC Frame w/Feet
	GC09776	1	Motor: XPFC, Class 2 Group F & G, 3 HP 1760 RPM 460/3/60 182TC Frame w/Feet
	GC09932	1	Motor: XPFC, Class 2 Group F & G, 5 HP 1760 RPM 460/3/60 184TC Frame w/Feet (380V Only)
3	GC07467	1	Sprocket, #80 12 Tooth
4	GC04494	1	Key, Square 3/8" x 3" (for Model 384 Reducer)
	S-8430	1	Key, Square 5/16" x 2" (for Model 324 Reducer)
5	GC07468	1	Bushing, 1615 x 1 3/8" Bore Taper Lock
	GC07469	1	Bushing, 1615 x 1 1/2" Bore Taper Lock
6	GC09827	1	324 Reducer Mount Plate (for 1 HP Motor)
	GC09670	1	384 Reducer Mount Plate (for 2 HP Motor)
	GC09661	1	384 Reducer Mount Plate (for 3 & 5 HP Motors)
7	GC03476	1	Tire, Mounted, 12-8x23" Right Hand Tractor Tread-Foam Filled
8	GC06508	1	Tire, Mounted, 12-8x23" Left Hand Tractor Tread-Foam Filled
9	GC03490		175 Lb Counter Weight
10	GC10195	1	Drive Axle Assembly - Bolt on Hubs
11	GC10044	1	Top Chain Guard Assembly
12	GC09899	2	Bearing Support Bracket
13	S-3883	8	Bolt HHCS 1/2-13 X 1 3/4
14	S-236	8	Washer Lock Split 1/2
15	S-3729	8	Nut Hex 1/2-13
16	S-8429	4	Bolt HHCS 5/8-11 X 2 1/2
17	S-858	4	Washer Flat 5/8
18	S-3208	4	Washer Lock Split 5/8
19	S-4110	4	Nut Hex 5/8-11
20	S-9242	4	5/8" Beveled Washer
21	GC03475	2	Bearing , Pillow Block 2" ID
22	GC03681	1	Sprocket #80 54 Tooth for Axle
23	GC03682	1	Bushing, 2" #2517 Taper Lock
24	GC08849	1	Bolt-on Drive Axle
25	GC09505	2	Bolt-on Hub Assembly
26	GC03811	1	Key, Square 1/2" x 2 1/4"
N/S	GC06866	1	Roller Chain #80 x 71"
N/S	GC03684	1	Connecting Link #80
N/S	GC03685	1	Offset Link #80
N/S	GC03653	1	Motor Cover 57" x 35" x 20"

Tractor Chain Guard Parts

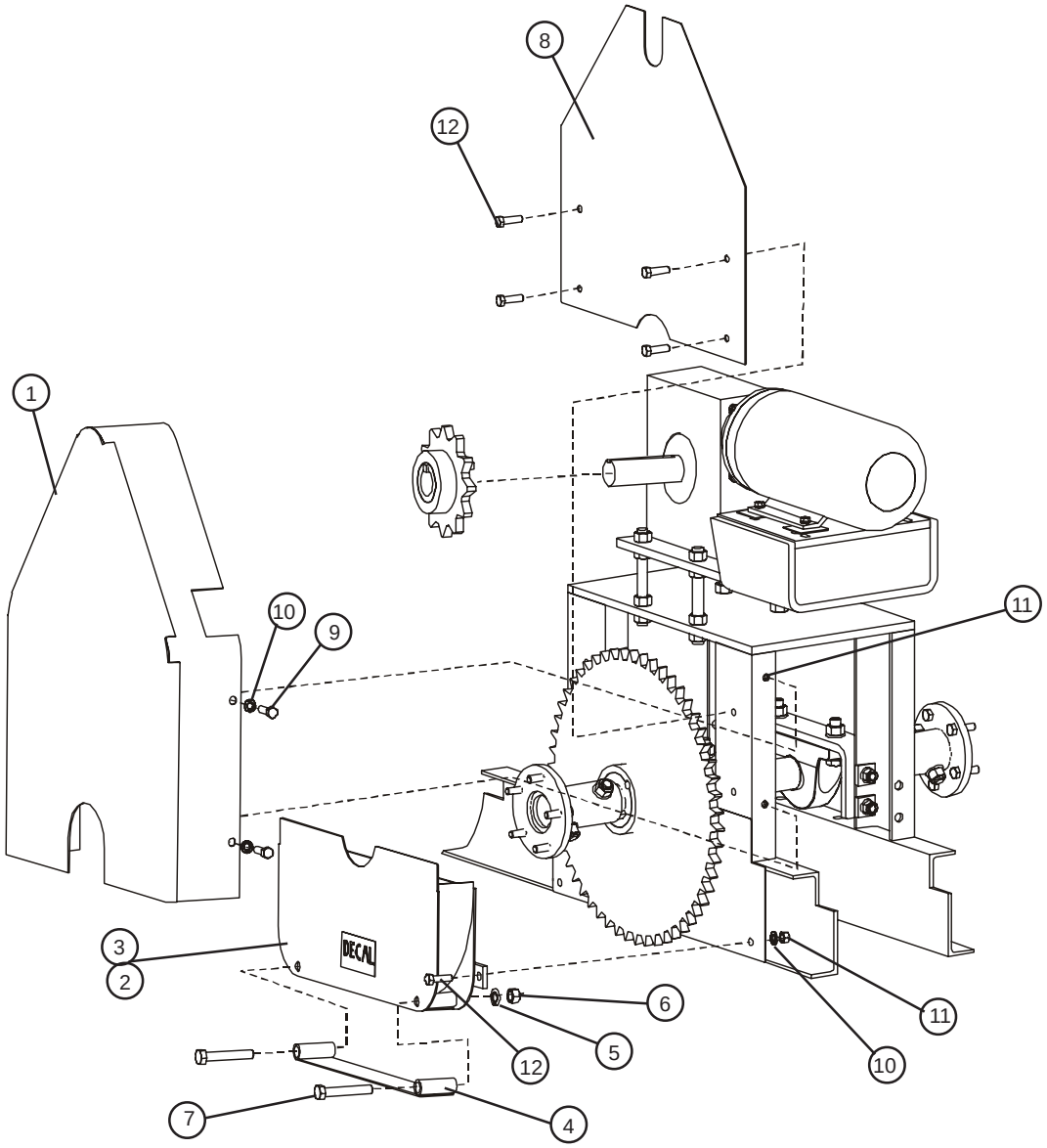

Item #	P/N	Qty	Description
1	GC10044	1	Top Chain Guard Assembly
2	GC10048	1	Bottom Chain Guard Assembly
3	GC10036	1	Bottom Chain Guard Weldment
4	GC10047	1	Bottom Chain Guard Trap
5	S-236	2	Washer, Split Lock 1/2"
6	S3729	2	Nut, Hex 1/2-13
7	S7722	2	Bolt, 1/2-13 x 3"
8	GC10035	1	Guard Plate
9	S-7520	4	BOLT HHCS 3/8-16 X 1
10	S-1054	10	WASHER LOCK SPLIT 3/8
11	S-456	10	NUT HEX 3/8-16
12	S-2071	6	BOLT HHCS 3/8-16 X 1 1/4

Motor Mount Jack & Base Assembly (GC09993)

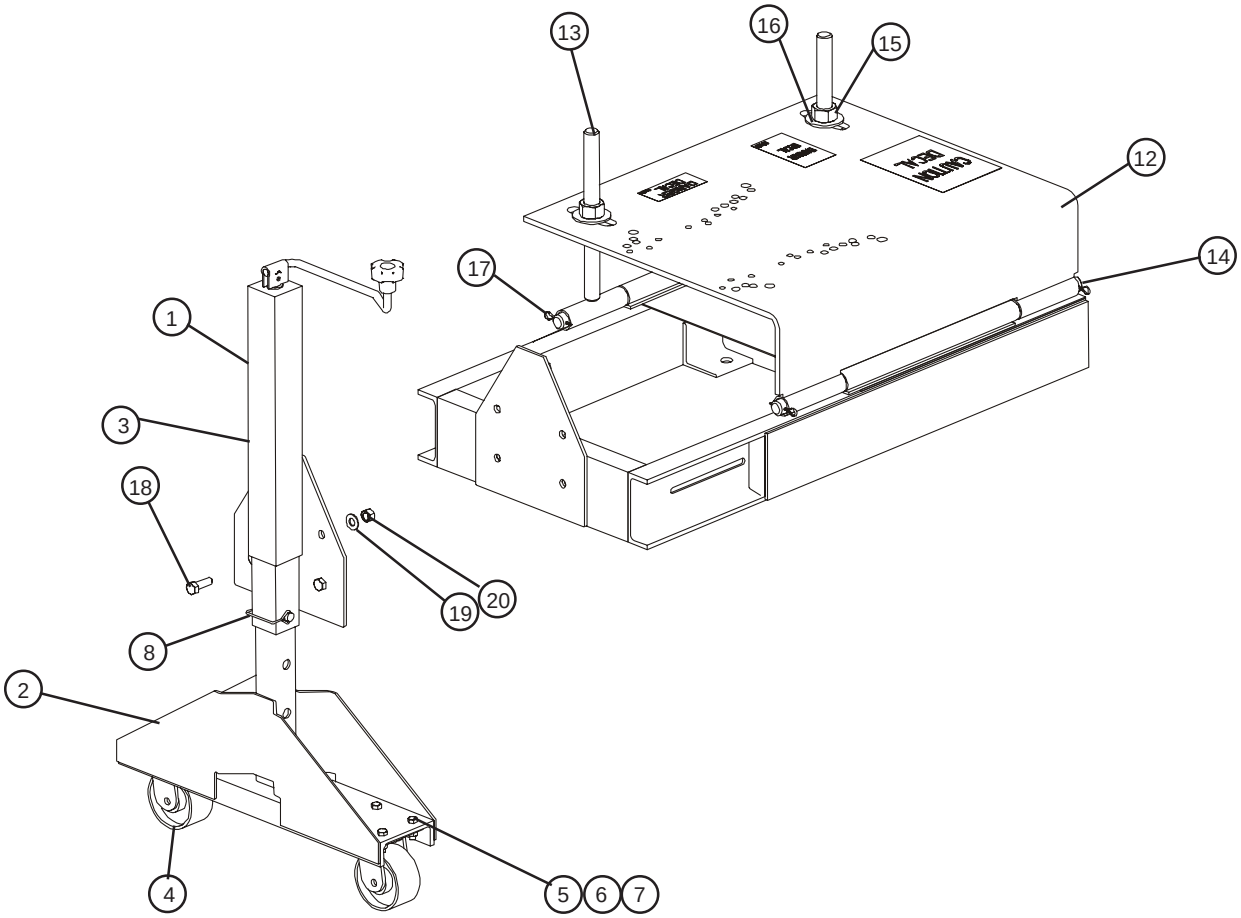

Motor Jack Assembly (GC09992)			
Ref No.	**Part No.**	**Qty.**	**Description**
1	GC09991	1	Jack Housing Assembly
2	GC09479	1	Jack/Caster Mount Base
3	GC03435	1	Jack-Complete
4	GC03436	2	Swivel Caster
5	S-1054	8	Washer, Lock 3/8
6	S-2071	8	Bolt, 3/8-16 x 1 1/4
7	S-456	8	Nut, Hex 3/8-16
8	S-8441	1	Jack Clevis Pin

Motor Mount Base Assembly (GC09986)			
Ref No.	**Part No.**	**Qty.**	**Description**
11	GC09984	1	Frame Weldment
12	GC09756	1	Top Plate Assembly
13	GC09755	2	Adjuster Assembly
14	GC09757	2	Pivot Shaft
15	S-240	4	Nut, Hex 1"-8
16	S-7835	4	Washer, Flat 1"
17	S-7241	4	Cotter Pin 1/8" x 1 1/4
18	S-8760	4	Bolt, 1/2-13 X 1 1/2
19	S-2120	4	Washer, Flat 1/2
20	S-3729	4	Nut, Hex 1/2-13

ALL 12" SWEEP JACK SUPPORTS & 16" JACK SUPPORTS AFTER 11-01-04

Item	Qty	Part No.	Description
1	1	GC06974	Caster Wheel 3" x 8" Dia x 3/4" Axle
1.1.	1	S-6638	Bolt HHCS 3/4"-10 x 5 1/2" ZN GR8
1.2.	1	S-233	Washer Lock Split 3/4" ZN
1.3.	1	S-234	Nut Hex 3/4"-10 ZN GR5
2	1	GC08507	S2 Sweep Jack Caster Assembly - 12"
3	1	S-8441	Pin
4	1	GC07934	S2 Sweep 7000# Jack Assembly
4.1.	4	S-7528	Bolt HHCS 1/2"-13 x 1 1/2" ZN GR5
4.2.	4	S-236	Washer Lock Split 1/2" ZN
4.3.	4	S-7510	Nut Hex 1/2"-13 ZN GR5
5	1	GC07839	Jack Mount Assembly
5.1.	4	S-8400	Bolt HHCS 1/2"-13 x 3 3/4" ZN GR5
5.2.	4	S-236	Washer Lock Split 1/2" ZN
5.3.	4	S-7510	Nut Hex 1/2"-13 ZN GR5
6	1	GC07926	S2 Sweep Jack Mount Plate Assembly
7	1	GC07931	S2 Sweep Jack Truss Assembly - 16"
7.1.	4	S-7528	Bolt HHCS 1/2"-13 x 1 1/2" ZN GR5
7.2.	4	S-236	Washer Lock Split 1/2" ZN
7.3.	4	S-7510	Nut Hex 1/2"-13 ZN GR5
N/S	1	GC08627	BOP:Jack Kit 12" (Contains all above parts less wheel)

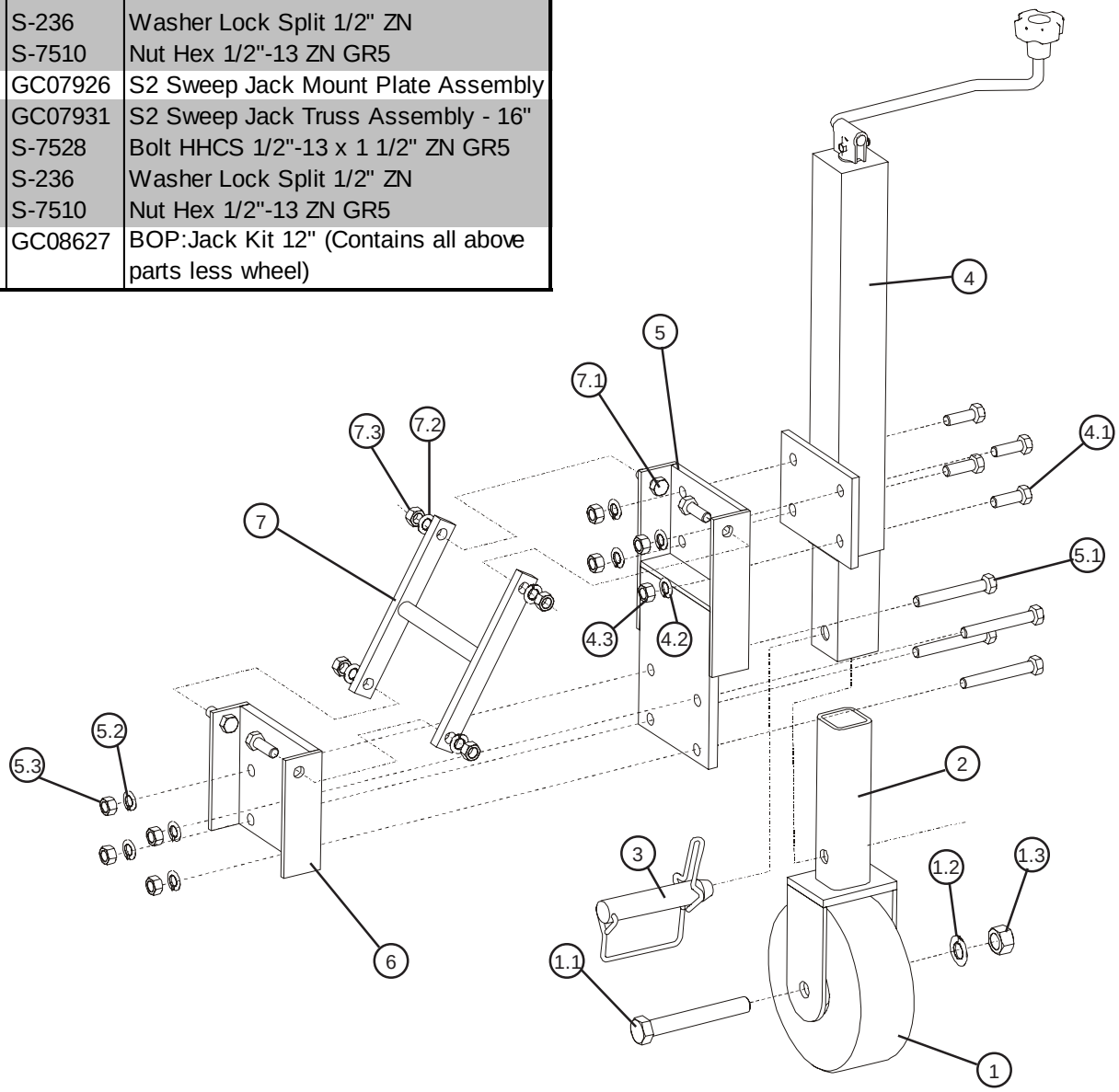

OLD STYLE 16" SWEEP JACK SUPPORT (Before 11-01-04)

Item	Qty	Part No	Description
1	1	GC07904	Swivel Caster 3" x 8" Dia
1.1	4	S-7528	Bolt HHCS 1/2"-13 x 1 1/2" ZN GR5
1.2	4	S-236	Washer Lock Split 1/2" ZN
1.3	4	S-7510	Nut Hex 1/2"-13 ZN GR5
2	1	GC07908	S2 Sweep Jack Caster Assembly - 16"
3	1	S-8441	Pin
4	1	GC07934	S2 Sweep 7000# Jack Assembly
4.1	4	S-7528	Bolt HHCS 1/2"-13 x 1 1/2" ZN GR5
4.2	4	S-236	Washer Lock Split 1/2" ZN
4.3	4	S-7510	Nut Hex 1/2"-13 ZN GR5
5	1	GC07839	Jack Mount Assembly
5.1	4	S-8400	Bolt HHCS 1/2"-13 x 3 3/4" ZN GR5
5.2	4	S-236	Washer Lock Split 1/2" ZN
5.3	4	S-7510	Nut Hex 1/2"-13 ZN GR5
6	1	GC07926	S2 Sweep Jack Mount Plate Assembly
7	1	GC07931	S2 Sweep Jack Truss Assembly - 16"
7.1	4	S-7528	Bolt HHCS 1/2"-13 x 1 1/2" ZN GR5
7.2	4	S-236	Washer Lock Split 1/2" ZN
7.3	4	S-7510	Nut Hex 1/2"-13 ZN GR5
N/S	1	GC07993	BOP:Jack Kit 16" (Contains all above parts)

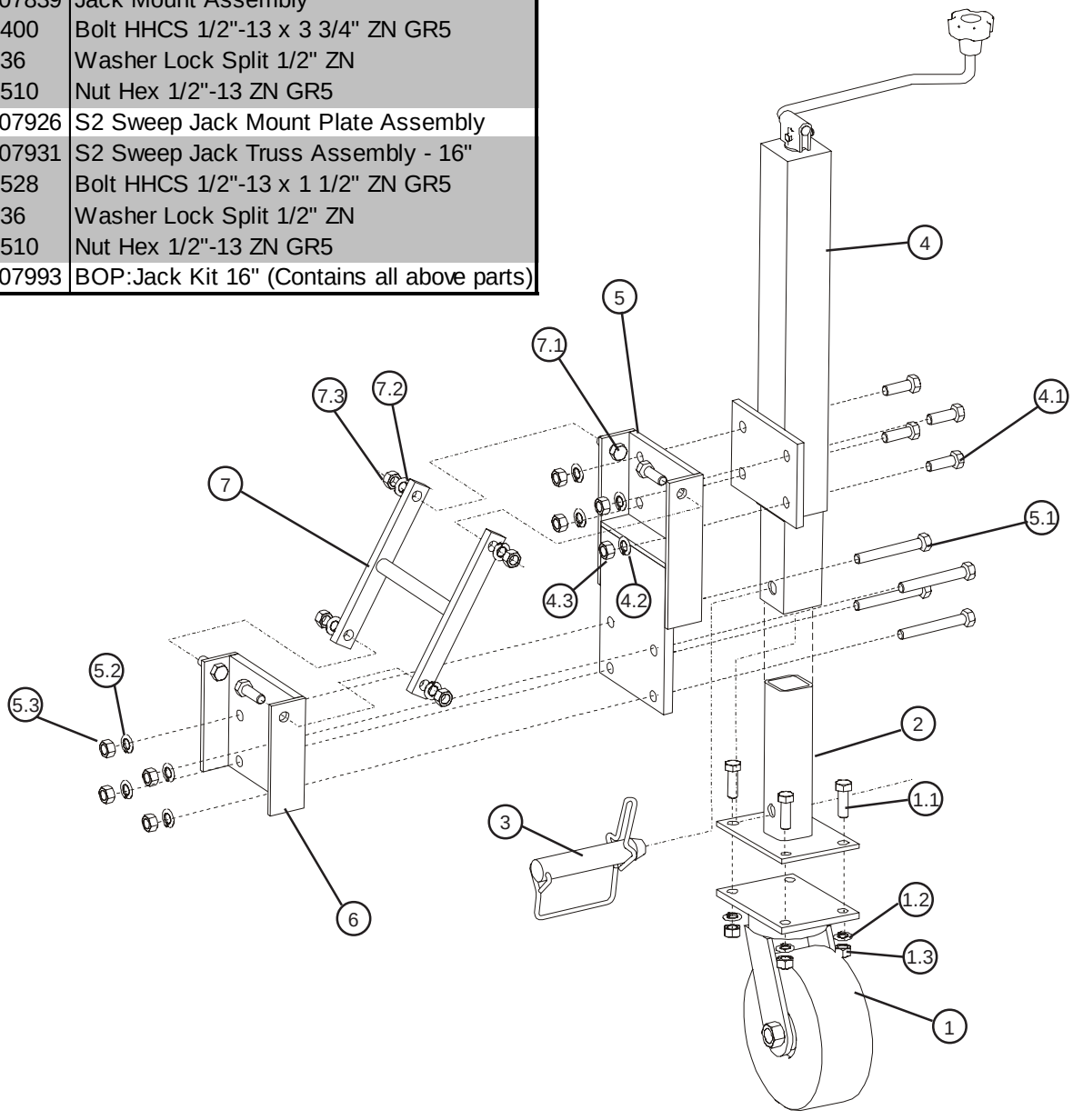

CONTROL PANEL COMPONENTS

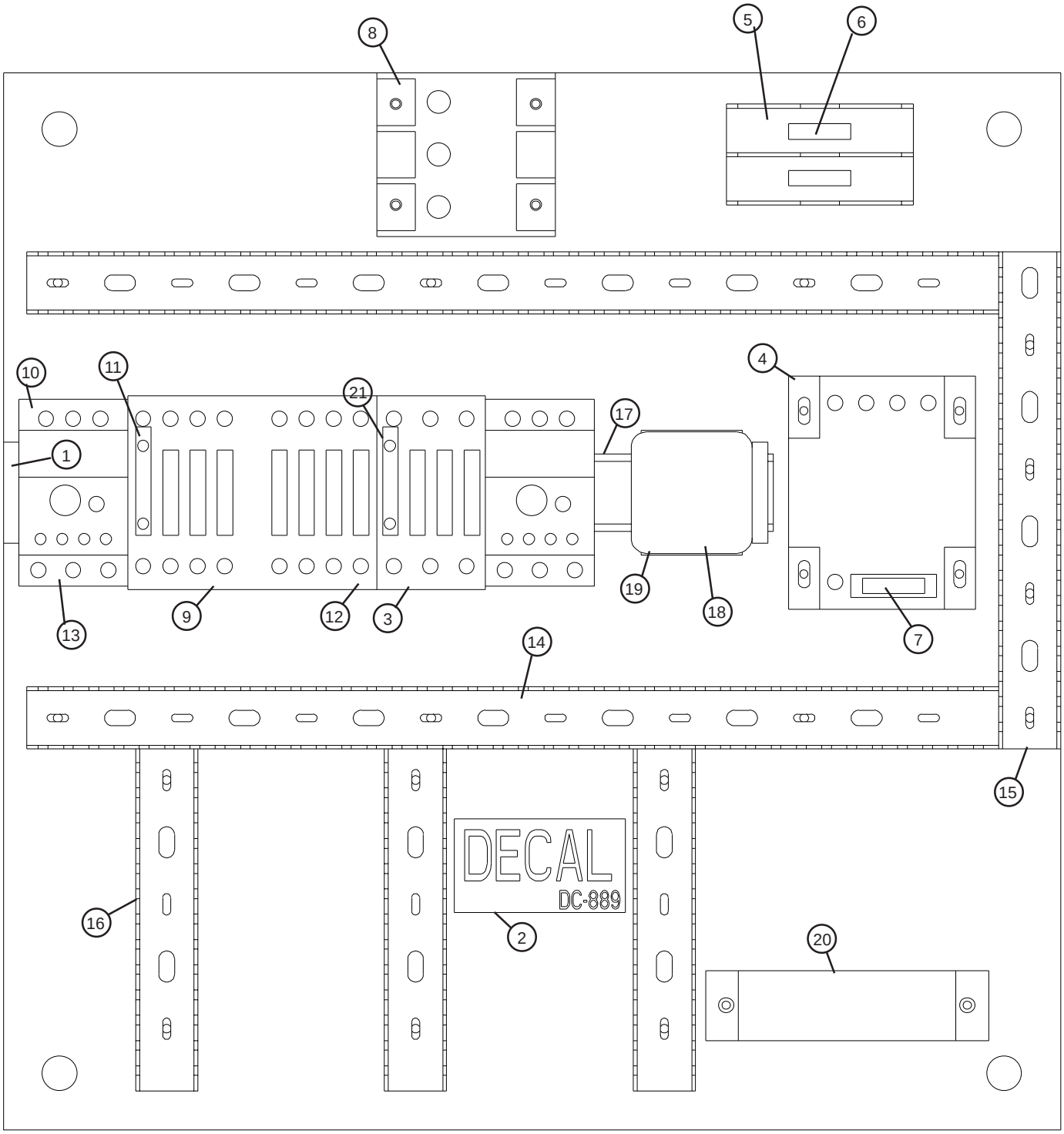

CONTROL PANEL COMPONENTS

Ref. #	Part #	Description
1	D01-0533	Din Rail End Stop
2	DC-889	Decal, DANGER! High Voltage
3	D03-0491	Starter 3-Pole Cont 22 Amps
	GCO7038	Starter 3-Pole Cont 32 Amps
	D03-0494	Starter 3-Pole Cont 48 Amps
	D03-0495	Starter 3-Pole Cont 62 Amps
	D03-0498	Starter 3-Pole Cont 96 Amps
4	GC03673	Transformer, 50-VA 50/60Hz, 230/380/460
	GC07950	Transformer, 50-VA 50Hz, 380V
	GC09386	Transformer, 50-VA 60Hz, 200/120V
	GC09509	Transformer, 50-VA 50Hz, 415V
5	GC03676	Fuse Block 2-Pole
6	GC03677	Fuse, 600V Midget TD 1/4 Amp
7	GC03679	Fuse, 250V Midget TD 6/10 Amp
8	C-8018	3-Pole Power Distribution Block
9	GC06951	Contact 5HP Reversing 120V 60Hz Coil
10	GC06953	Panel Mount for Over Loads
11	GC06967	Contact Block 1-Pole NC
12	GC06984	IEC O/L Relay 10.0-16.0 Amps
	D03-0477	IEC O/L Relay 17.5-22.0 Amps
	GC07862	IEC O/L Relay 21.0-26.0 Amps
	GC06983	IEC O/L Relay 25.0-32.0 Amps
	D03-0482	IEC O/L Relay 30.0-43.0 Amps
	D03-0483	IEC O/L Relay 42.0-55.0 Amps
	D03-0485	IEC O/L Relay 64.0-82.0 Amps
13	GC06986	IEC O/L Relay 1.8-2.7 Amps
	GC06982	IEC O/L Relay 2.5-4.1 Amps
	GC03658	IEC O/L Relay 4.0-6.3 Amps
	GC07795	IEC O/L Relay 5.5-8.5 Amps
14	GC06987	Wire Duct 1" x 2" x 15 5/8"
15	GC06988	Wire Duct 1" x 2" x 8"
16	GC06989	Wire Duct 1" x 2" x 5 1/2"
17	GC06993	Din Rail 12 3/8"
18	GC07509	AC Current Transducer
19	GC07510	AC Current Transducer Socket
20	GC07511	Current Transformer 50:5 Amp
	GC09250	Current Transformer 75:5 Amp
21	GC07591	Contact Block 1-Pole NO

CONTROL PANEL COMPONENTS

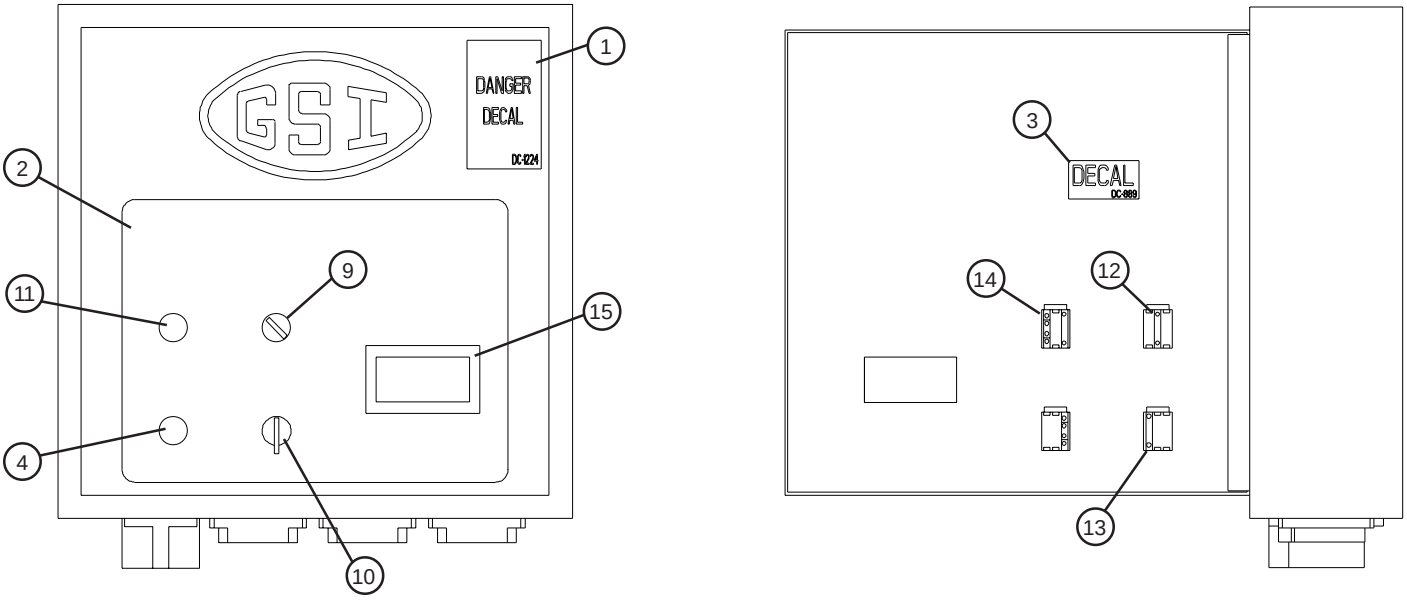

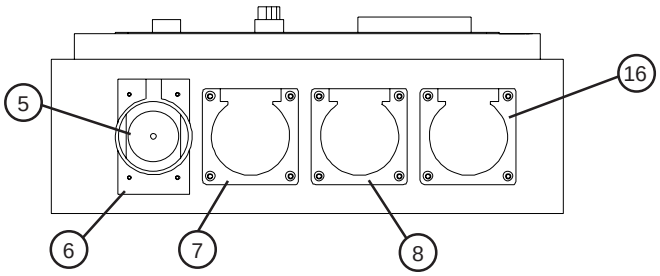

Ref. #	Part #	Description
1	DC-1224	Decal, DANGER! Hi Voltage
2	DC-1536	Decal, Series 2 Sweep Panel Overlay
3	DC-889	Decal, DANGER! Hi Voltage
4	GC03659	Std-Round-Push Button-Plastic-Flush-Red
5	GC03666	Hubbell Locking Receptacle - 3-Pole 4-Wire 50 Amps 480 Voltage
6	GC03667	Hubbell Wdl Open Lift Cover
N/S	GC03668	Hubbell Locking Plug - 3-Pole 4-Wire 50 Amps 480 Voltage
7	GC03669	Hubbell Locking Receptacle - Nema L16-20R
N/S	GC03670	Hubbell Locking Plug - Nema L16-20P
8	GC06954	Hubbell Locking Receptacle - Nema L7-20R
9	GC06956	2 Position - Maint - Plastic - Black
10	GC06957	3 Position - Lever - SL - Sw - Momentary
11	GC06958	Std-Round-Push Button-Plastic-Flush-Green
12	GC06959	Cnt Blck/1NO/SCR
13	GC06960	Cnt Blck/1NC/SCR
14	GC06961	Cnt Blck/SCR
15	GC07585	Series 2 Sweep Amp Meter
16	GC03671	Hubbell Locking Receptacle - Nema L5-20R
N/S	GC03672	Hubbell Locking Plug - Nema L5-20P
N/S	GC06857	Series 2 Sweep Safety Footswitch Assembly

WEIGHT EXTENSION KIT

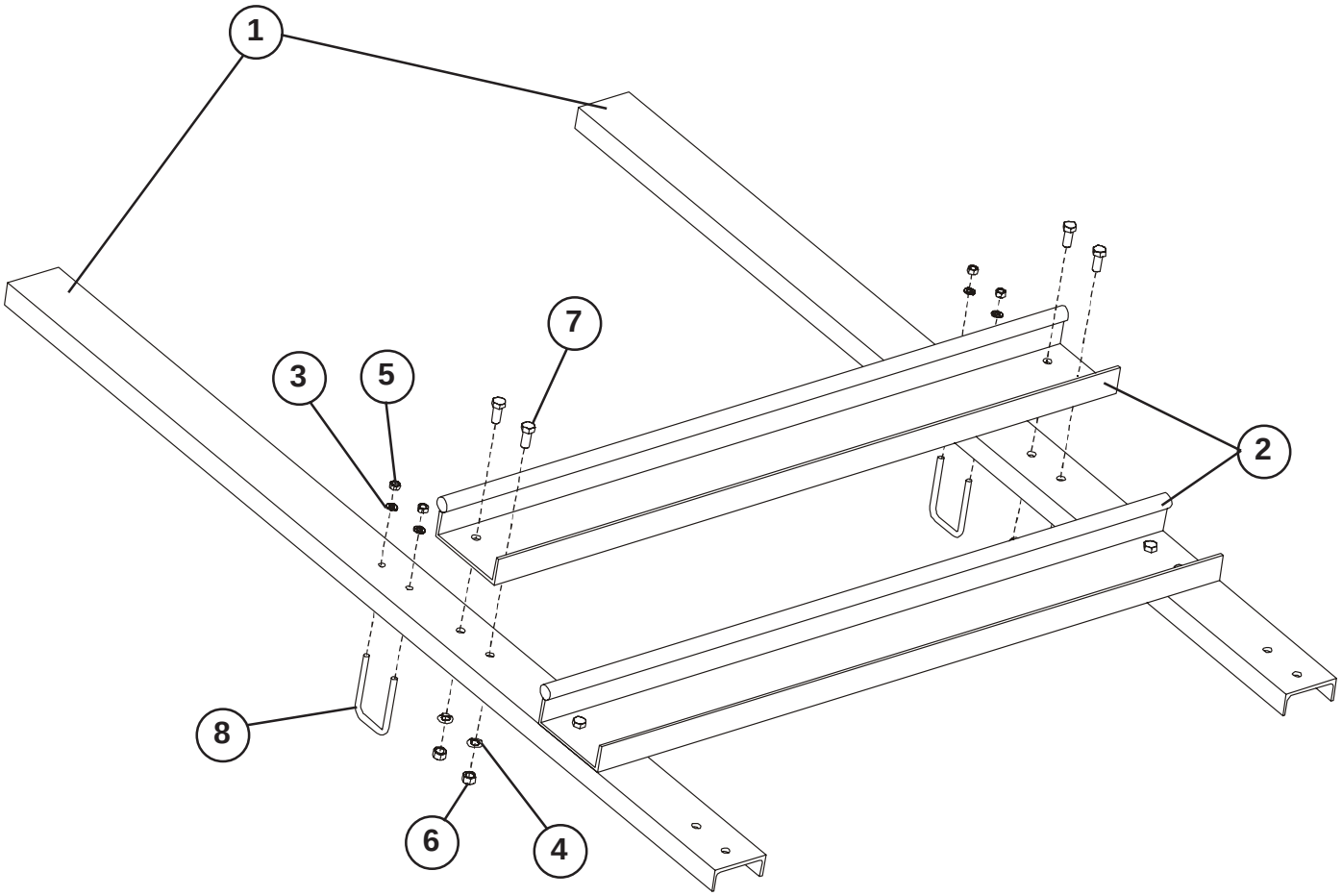

Weight Channel Kit		
Ref. No.	**Part No.**	**Description**
1	GC08141	S2 Sweep Adjustable Center Weight Channel
2	GC08143	S2 Sweep Center Weight Channel Weldment
3	S-1054	3/8" Split Lock Washer Zinc
4	S-236	1/2" Split Lock Washer Med Zinc
5	S-456	3/8"-16 Hex Nut Zinc YDP Gr5
6	S-7510	1/2"-13 Hex Nut Zinc Gr2
7	S-7534	1/2"-13 x 1-1/4" HHCS Bolt Zinc Gr5
8	S-8666	3/8"-16 x 2-7/16" U-Bolt Zinc

NOTES

THE GSI GROUP, INC. WARRANTY

THE GSI GROUP, INC. (“GSI”) WARRANTS ALL PRODUCTS WHICH IT MANUFACTURES TO BE FREE OF DEFECTS IN MATERIAL AND WORKMANSHIP UNDER NORMAL USAGE AND CONDITIONS FOR A PERIOD OF 12 MONTHS AFTER RETAIL SALE TO THE ORIGINAL END USER. THE PURCHASER’S SOLE REMEDY AND GSI’S ONLY OBLIGATION SHALL BE TO REPAIR OR REPLACE, AT GSI’S OPTION AND EXPENSE, PRODUCTS THAT, IN GSI’S SOLE JUDGMENT, CONTAIN A MATERIAL DEFECT DUE TO MATERIALS OR WORKMANSHIP. ALL DELIVERY AND SHIPMENT CHARGES TO AND FROM GSI’S FACTORY WILL BE PURCHASER’S RESPONSIBILITY. EXPENSES INCURRED BY OR ON BEHALF OF THE PURCHASER WITHOUT PRIOR WRITTEN AUTHORIZATION FROM AN AUTHORIZED EMPLOYEE OF GSI SHALL BE THE SOLE RESPONSIBILITY OF THE PURCHASER.

EXCEPT FOR THE LIMITED WARRANTY EXPRESSED ABOVE, GSI MAKES NO FURTHER WARRANTY OF ANY KIND, EXPRESS OR IMPLIED, INCLUDING, WITHOUT LIMITATION, WARRANTIES OF MERCHANTABILITY OR FITNESS FOR A PARTICULAR PURPOSE OR USE IN CONNECTION WITH (I) PRODUCT MANUFACTURED OR SOLD BY GSI OR (II) ANY ADVICE, INSTRUCTION, RECOMMENDATION OR SUGGESTION PROVIDED BY AN AGENT, REPRESENTATIVE OR EMPLOYEE OF GSI REGARDING OR RELATED TO THE CONFIGURATION, INSTALLATION, LAYOUT, SUITABILITY FOR A PARTICULAR PURPOSE, OR DESIGN OF SUCH PRODUCTS.

GSI SHALL NOT BE LIABLE FOR ANY DIRECT, INDIRECT, INCIDENTAL OR CONSEQUENTIAL DAMAGES, INCLUDING, WITHOUT LIMITATION, LOSS OF ANTICIPATED PROFITS OR BENEFITS. PURCHASER’S SOLE AND EXCLUSIVE REMEDY IS AS SET FORTH IN THE LIMITED WARRANTY EXPRESSED ABOVE, WHICH SHALL NOT EXCEED THE AMOUNT PAID FOR THE PRODUCT PURCHASED. THIS WARRANTY IS NOT TRANSFERABLE AND APPLIES ONLY TO THE ORIGINAL PURCHASER. GSI SHALL HAVE NO OBLIGATION OR RESPONSIBILITY FOR ANY REPRESENTATIONS OR WARRANTIES MADE BY OR ON BEHALF OF ANY DEALER, AGENT OR DISTRIBUTOR OF GSI.

GSI ASSUMES NO RESPONSIBILITY FOR CLAIMS RESULTING FROM ERECTION DEFECTS OR UNAUTHORIZED MODIFICATIONS TO PRODUCTS WHICH IT MANUFACTURED. MODIFICATIONS TO PRODUCTS NOT SPECIFICALLY DELINEATED IN THE MANUAL ACCOMPANYING THE EQUIPMENT AT INITIAL SALE WILL NULLIFY THE PRODUCT WARRANTY THAT MIGHT HAVE BEEN OTHERWISE AVAILABLE.

THE FOREGOING WARRANTY SHALL NOT EXTEND TO PRODUCTS OR PARTS WHICH HAVE BEEN DAMAGED BY NEGLIGENT USE, MISUSE, ALTERATION OR ACCIDENT. THIS WARRANTY EXTENDS SOLELY TO ONLY PRODUCTS MANUFACTURED BY GSI. THIS WARRANTY IS EXCLUSIVE AND IN LIEU OF ALL OTHER WARRANTIES EXPRESS OR IMPLIED. GSI RESERVES THE RIGHT TO MAKE DESIGN OR SPECIFICATION CHANGES AT ANY TIME.

PRIOR TO INSTALLATION, PURCHASER HAS THE RESPONSIBILITY TO COMPLY WITH ALL FEDERAL, STATE AND LOCAL CODES WHICH MAY APPLY TO THE LOCATION AND INSTALLATION OF PRODUCTS MANUFACTURED OR SOLD BY GSI.

THIS EQUIPMENT SHALL BE INSTALLED IN ACCORDANCE WITH THE CURRENT INSTALLATION CODES AND APPLICABLE REGULATIONS WHICH SHOULD BE CAREFULLY FOLLOWED IN ALL CASES. AUTHORITIES HAVING JURISDICTION SHOULD BE CONSULTED BEFORE INSTALLATIONS ARE MADE.

P.O. Box 20
1004 E. IL. St
Assumption IL. 62510
(217) 226-4421
(217) 226-4429

Copyright © 2005 by The GSI Group
Printed in the USA