1004 East Illinois Street • Assumption, IL 62510 • 1-217-226-4421

Instructions
8' x 8' Inside Service Platform Assembly for Towers

The service platform is installed either at the bottom of the tower or onto the top of the tower depending on the requirements.

1. Assemble the stub column weldments (7) and primary channels (8) together using 1/2"-13 x 1-1/4" flange bolts (1) and 1/2"-13 flange nuts (4).

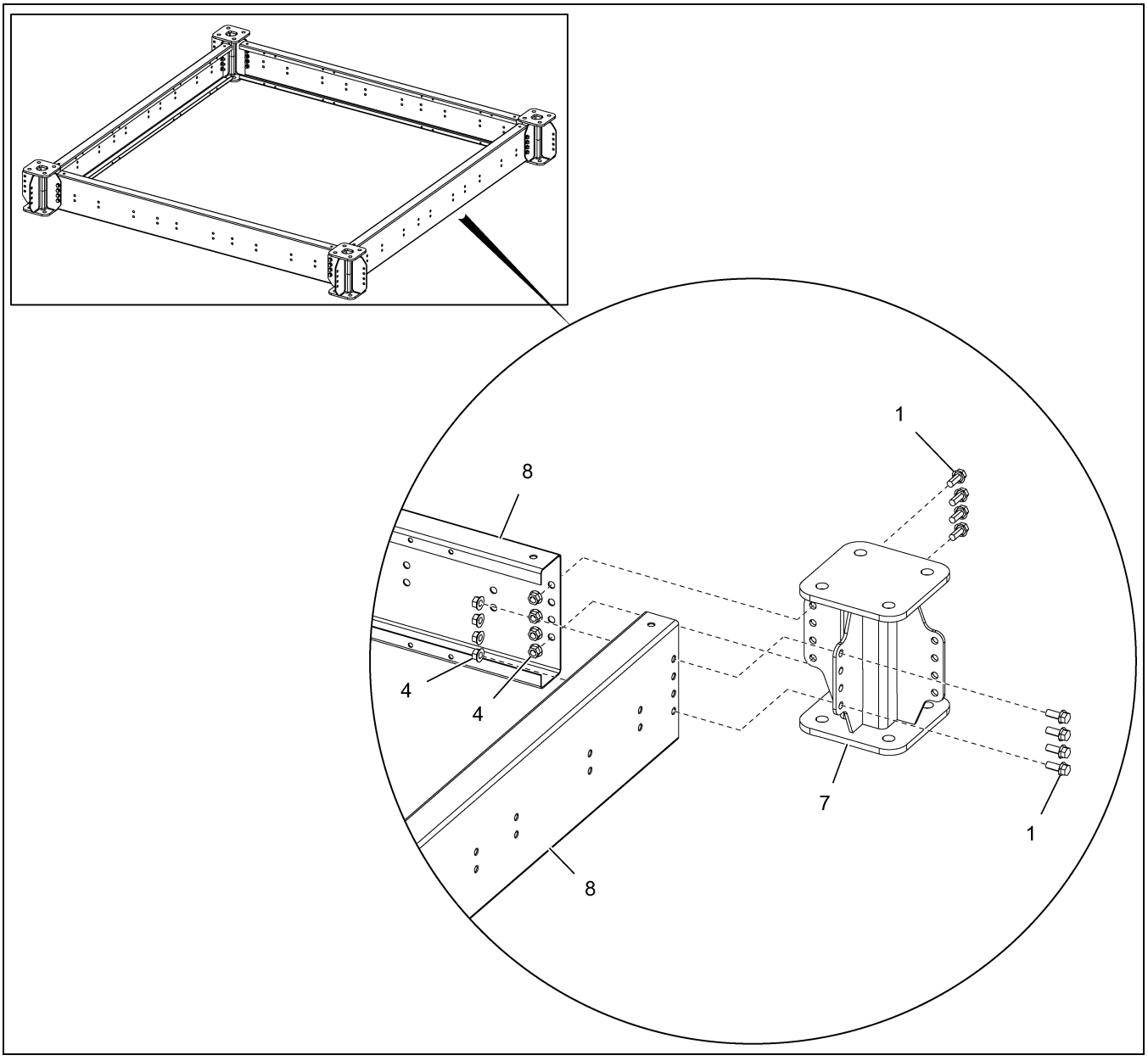

Figure 1 *Assembling the Stub Column Weldments and the Primary Channels*

Ref #	Part #	Description
1	S-9062	1/2"-13 x 1-1/4" Flange Bolt
4	S-8506	1/2"-13 Flange Nut

Ref #	Part #	Description
7	SDPPF-CW3B	Stub Column Weldment
8	SDPPF-PC08A	Primary Channel

Printed in the U.S.A.
Copyright © 2023 by The GSI Group, LLC
www.grainsystems.com

PNEG-2427

2. Attach the connection angles (9) to the inside of two primary channels (8) using 1/2"-13 x 1-1/4" flange bolts (1) and 1/2"-13 flange nuts (4).

NOTE: *Make sure to attach the connection angles (9) to the primary channels (8) that are opposite to one another.*

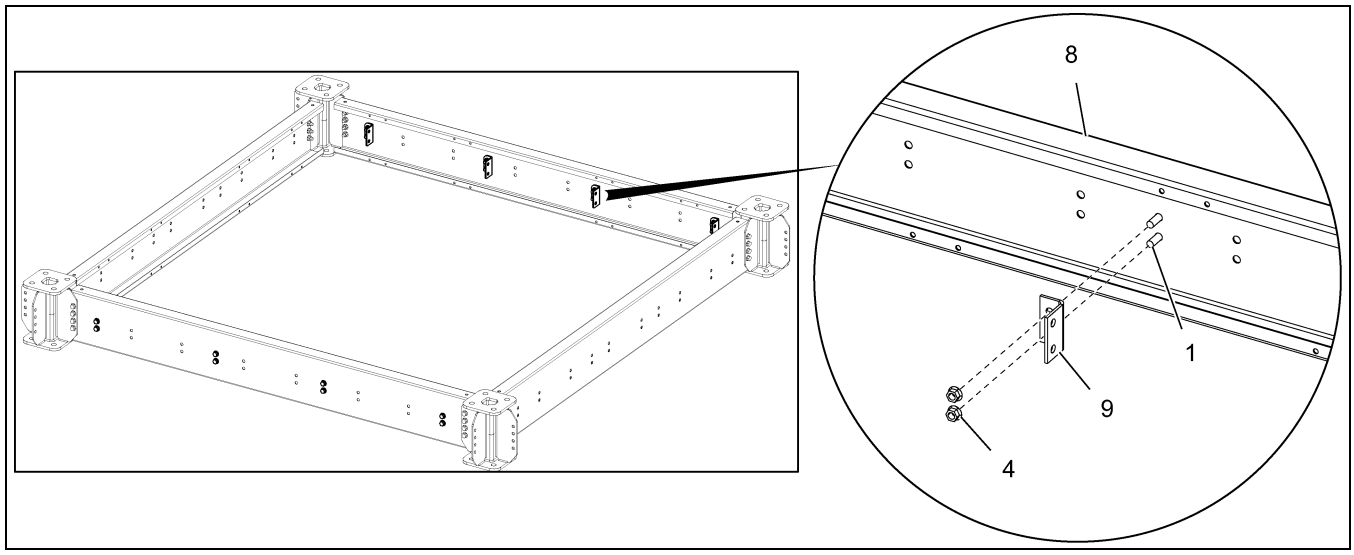

Figure 2 *Attaching the Connection Angles to the Primary Channels*

Ref #	Part #	Description
1	S-9062	1/2"-13 x 1-1/4" Flange Bolt
4	S-8506	1/2"-13 Flange Nut

Ref #	Part #	Description
8	SDPPF-PC08A	Primary Channel
9	SDPPF-CA01	Connection Angle

3. Attach the secondary channels (10) between each pair of connection angles (9) using 1/2"-13 x 1-1/4" flange bolts (1) and 1/2"-13 flange nuts (4).

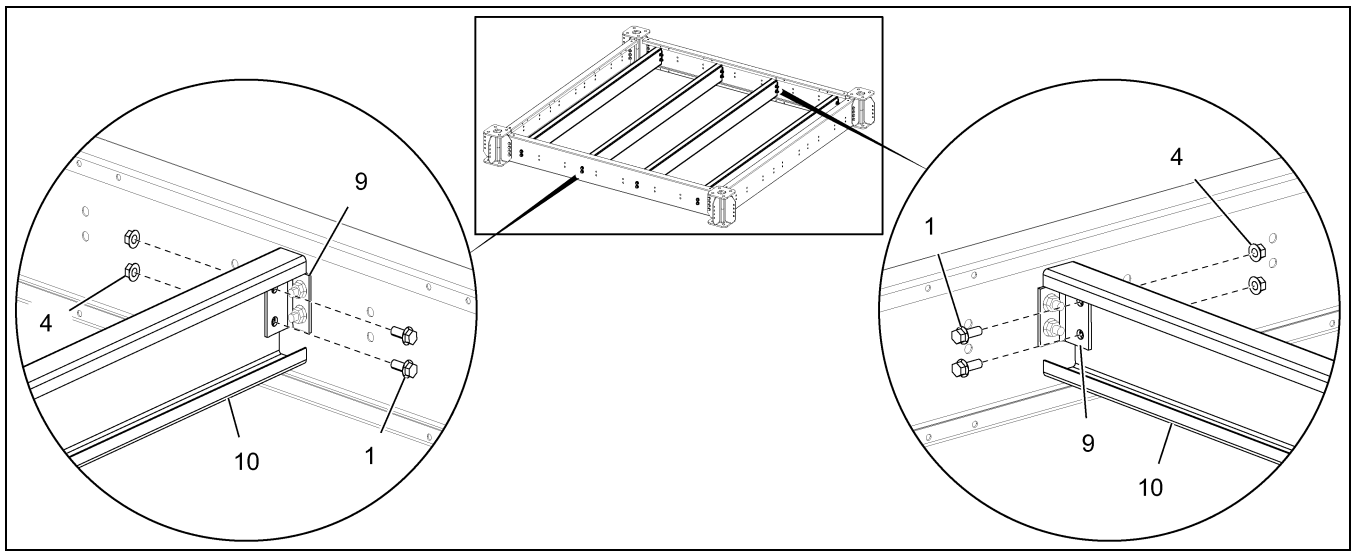

Figure 3 *Attaching the Secondary Channels to the Connection Angles*

Ref #	Part #	Description
1	S-9062	1/2"-13 x 1-1/4" Flange Bolt
4	S-8506	1/2"-13 Flange Nut

Ref #	Part #	Description
9	SDPPF-CA01	Connection Angle
10	SDPPF-SC08A	Secondary Channel

4. Attach the handrail posts (11) to the inside of all four primary channels (8) using 5/16"-18 x 1" flange bolts (2) and 5/16"-18 flange nuts (5).

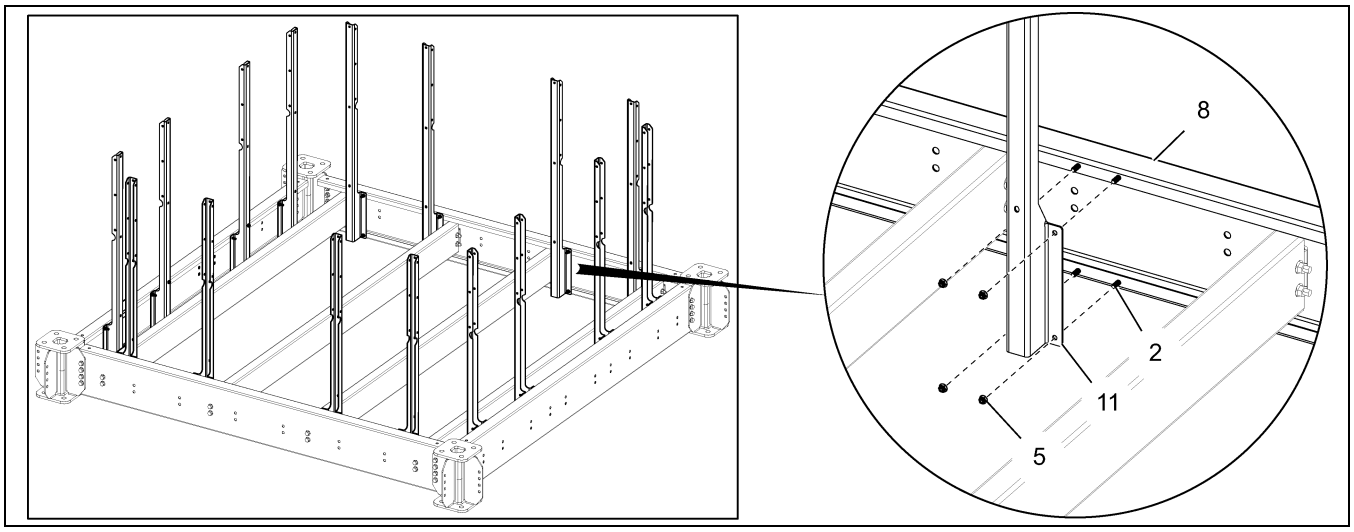

Figure 4 *Attaching the Handrail Posts to the Primary Channels*

Ref #	Part #	Description
2	S-10260	5/16"-18 x 1" Flange Bolt with Sealing Washer
5	S-10268	5/16"-18 Flange Nut

Ref #	Part #	Description
8	SDPPF-PC08A	Primary Channel
11	SDPPF-HRP01	Handrail Post

5. Attach the toeboards (12 and 13) between the handrail posts (11) on all four sides of the platform using 5/16"-18 x 1" flange bolts (2) and 5/16"-18 flange nuts (5).

NOTE: *For each side of the platform, toeboard (13) is installed at the middle and toeboards (12) are installed to each side of toeboard (13). Overlap the toeboard ends when attaching to the handrail posts (11).*

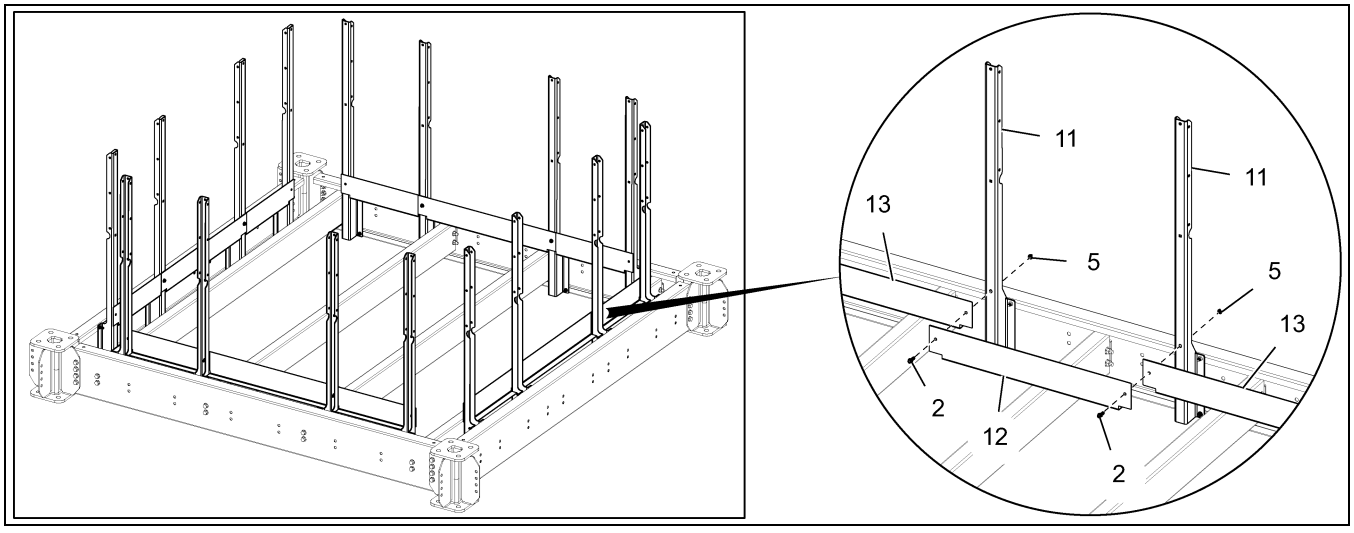

Figure 5 *Attaching the Toeboards to the Handrail Posts*

Ref #	Part #	Description
2	S-10260	5/16"-18 x 1" Flange Bolt with Sealing Washer
5	S-10268	5/16"-18 Flange Nut
11	SDPPF-HRP01	Handrail Post

Ref #	Part #	Description
12	TBL-03300	Toeboard
13	TBL-02050	Toeboard

6. Place the planks (14) over the secondary channels (10). Secure the planks (14) to the secondary channels (10) using grip struct clips (15) and 1/4" x 3" self-drilling screws (6).

   NOTE: *Use two grip struct clips (15) for each plank (14).*

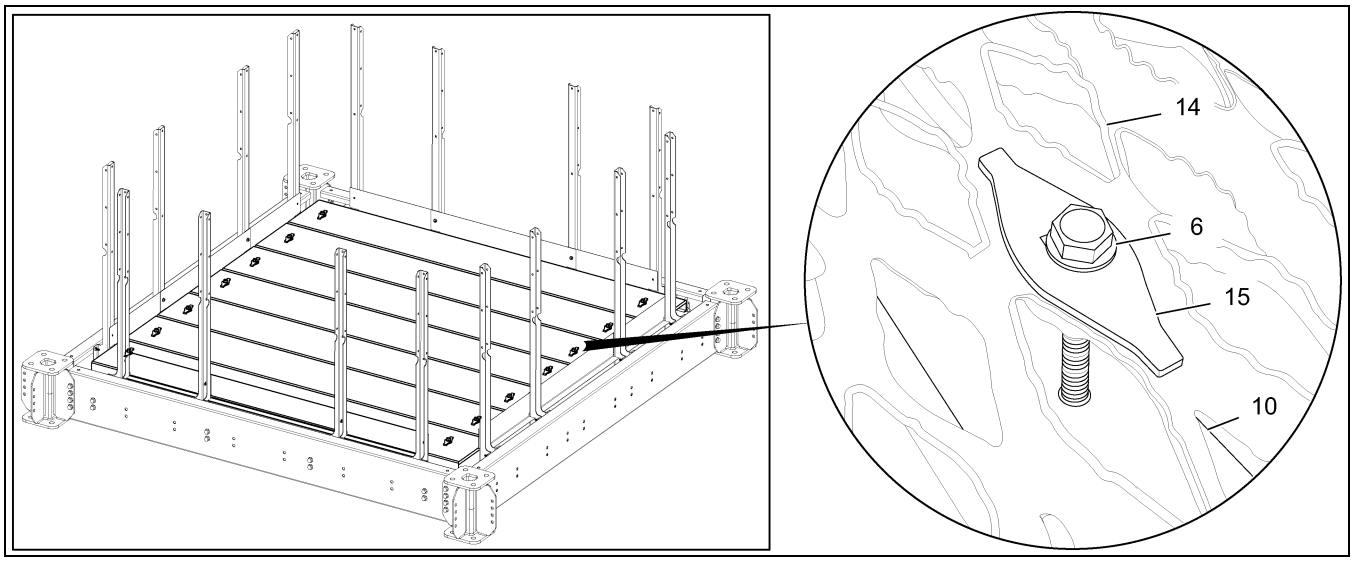

Figure 6 *Attaching the Planks to the Secondary Channels*

Ref #	Part #	Description
6	S-10568	1/4" x 3" Self-Drilling Screw
10	SDPPF-SC08A	Secondary Channel

Ref #	Part #	Description
14	GSP142-05-08350	Plank
15	GSCLIP	Grip Strut Clip

7. Install the handrail weldments (16 and 17) to the top of the handrail posts (11) using 5/16"-18 x 1" flange bolts (2) and 5/16"-18 flange nuts (5).

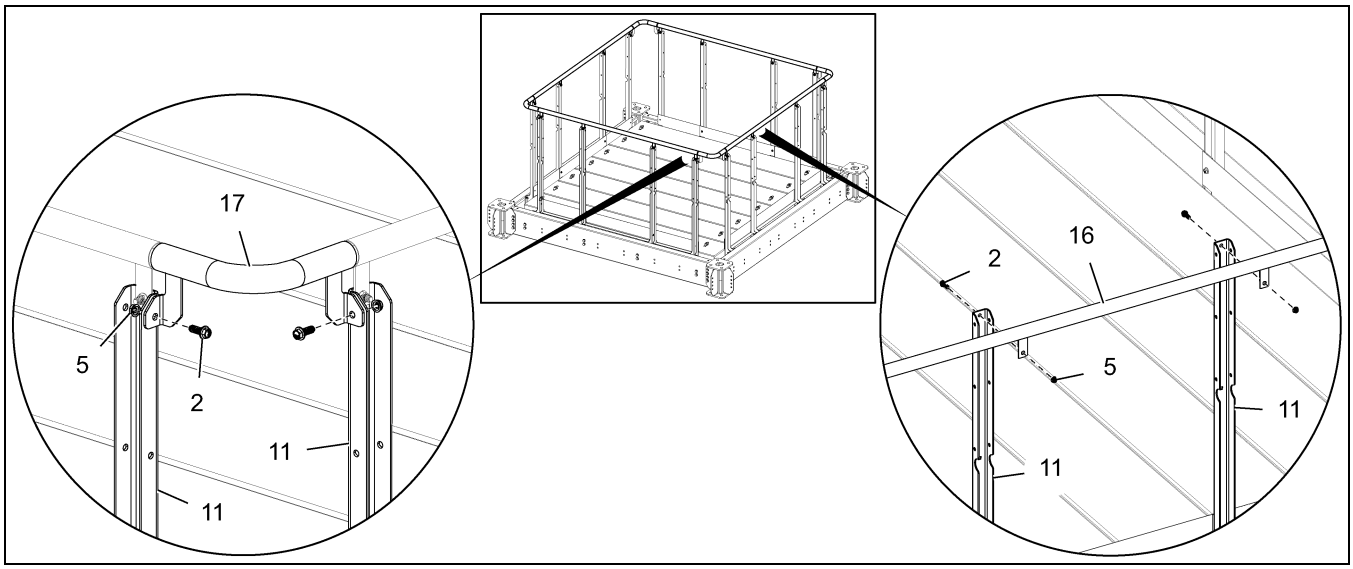

Figure 7 *Installing the Handrail Weldments to the Handrail Posts*

Ref #	Part #	Description
2	S-10260	5/16"-18 x 1" Flange Bolt with Sealing Washer
5	S-10268	5/16"-18 Flange Nut
11	SDPPF-HRP01	Handrail Post

Ref #	Part #	Description
16	HRW-07000-E4	Handrail Weldment
17	HRW-00700-C2	Corner Handrail Weldment

8. Install the guardrail tubes (18) and handrail splices (19) to the middle of the handrail posts (11) using 5/16"-18 x 3" carriage bolts (3) and 5/16"-18 flange nuts (5).

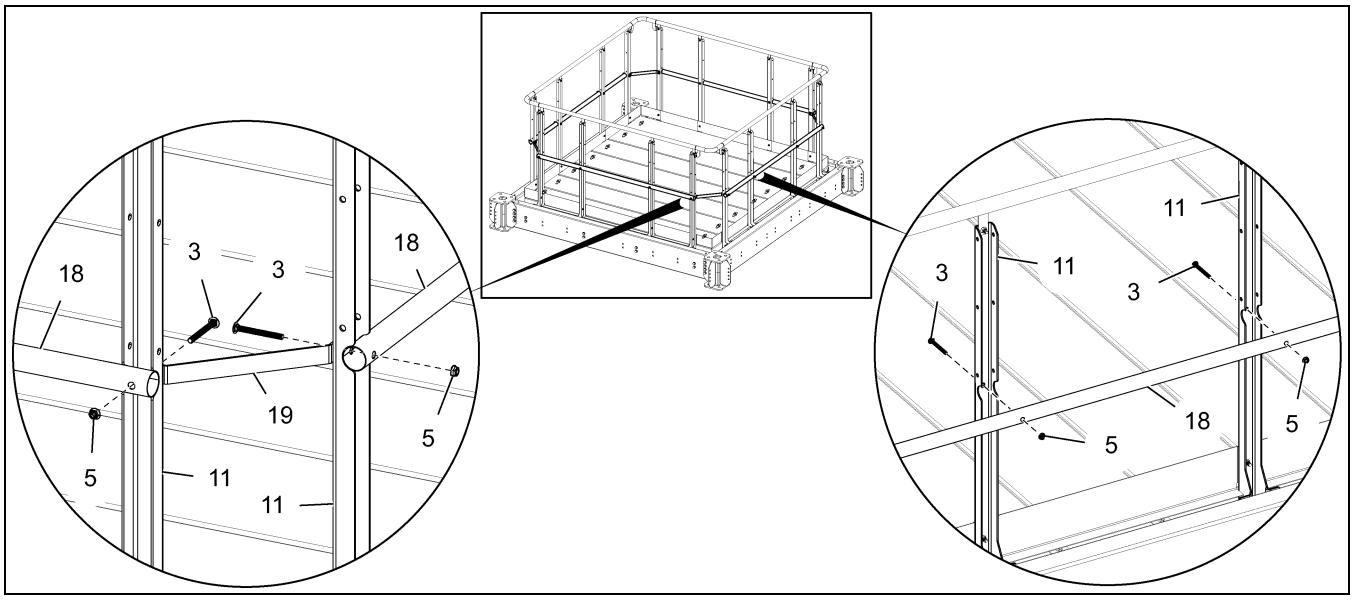

Figure 8 *Installing the Guardrail Tubes and Handrail Splices to the Handrail Posts*

Ref #	Part #	Description
3	S-9094	5/16"-18 x 3" Carriage Bolt
5	S-10268	5/16"-18 Flange Nut
11	SDPPF-HRP01	Handrail Post

Ref #	Part #	Description
18	HRB-07000-E4	Guardrail Tube
19	HRS-00700-C	Handrail Splice

9. Attach the toeboard splices (20) between the handrail posts (11) on all four corners of the platform using 5/16"-18 x 1" flange bolts (2) and 5/16"-18 flange nuts (5).

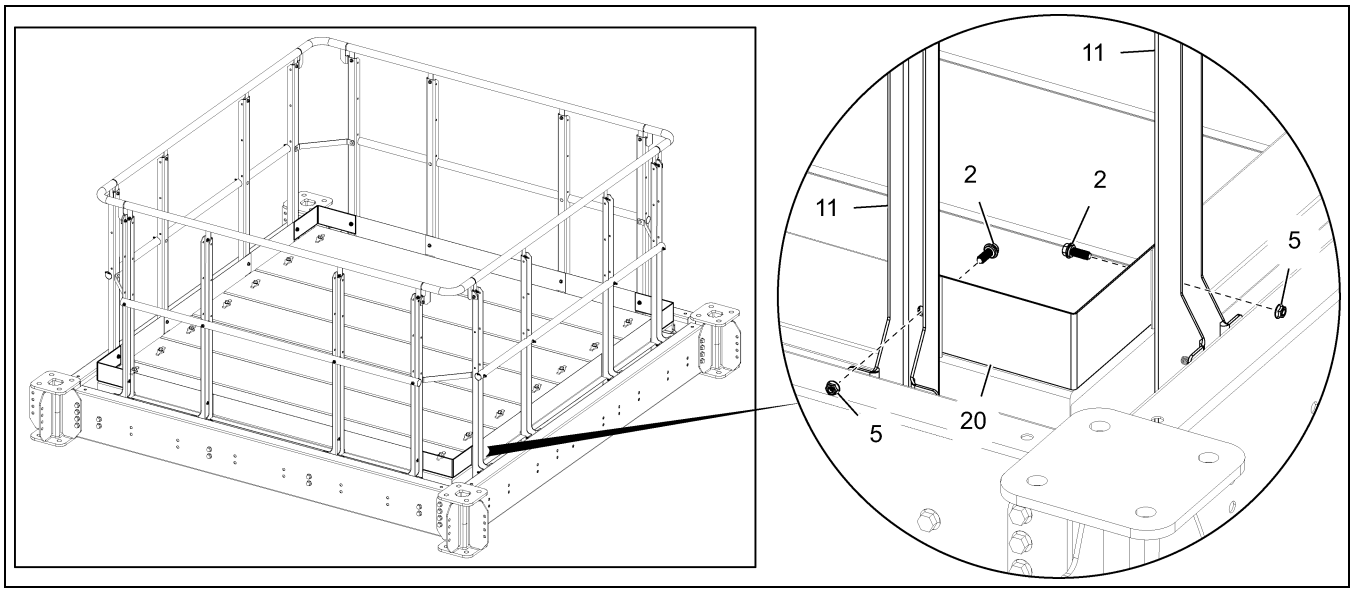

Figure 9 *Attaching the Toeboard Splices to the Handrail Posts*

Ref #	Part #	Description
2	S-10260	5/16"-18 x 1" Flange Bolt with Sealing Washer
5	S-10268	5/16"-18 Flange Nut

Ref #	Part #	Description
11	SDPPF-HRP01	Handrail Post
20	TBS-00900L	Toeboard Splice

8' x 8' Inside Service Platform Assembly (SDPPF-30808-A0000) Parts List

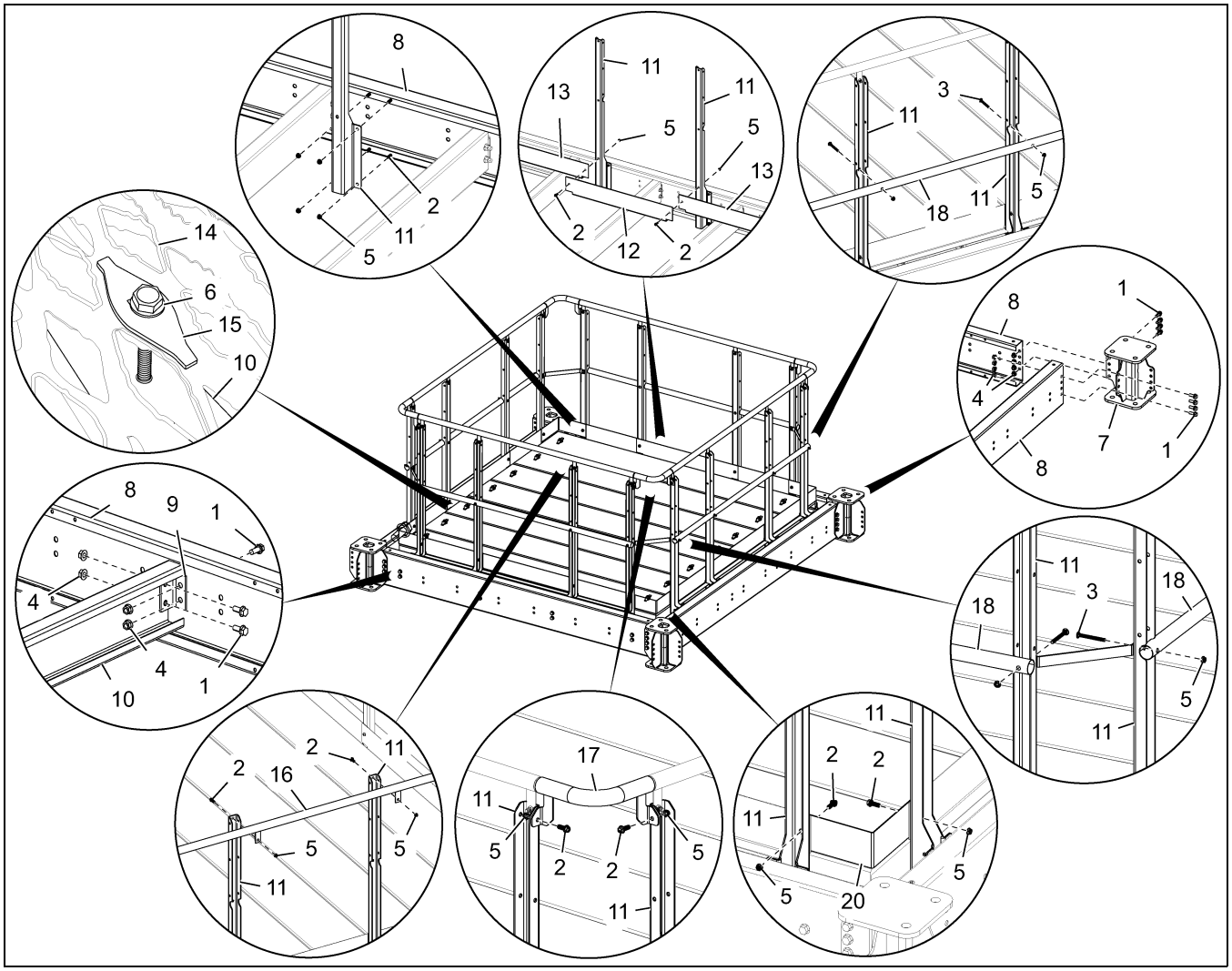

Ref #	Part #	Description	Qty
1	S-9062	Bolt, Flange 1/2"-13 x 1-1/4" ZN Grade 5	64
2	S-10260	Bolt, Flange 5/16"-18 x 1", Grade 8 or 8.2, JS500 or JS1000 Full Thread with Sealing Washer	104
3	S-9094	Bolt, Carriage 5/16"-18 x 3" ZN Grade 5	16
4	S-8506	Nut, Flange 1/2"-13 ZN Grade 5	64
5	S-10268	Nut, Flange 5/16"-18 JS500 Grade 5	120
6	S-10568	Screw, 1/4" x 3" Self-Drilling ZN	14
7	SDPPF-CW3B	Stub Column Weldment	4
8	SDPPF-PC08A	Primary Channel	4
9	SDPPF-CA01	Connection Angle	8
10	SDPPF-SC08A	Secondary Channel	4
11	SDPPF-HRP01	Handrail Post	16
12	TBL-03300	Toeboard	4
13	TBL-02050	Toeboard	8
14	GSP142-05-08350	Plank	7
15	GSCLIP	Grip Strut Clip	14
16	HRW-07000-E4	Handrail Weldment	4
17	HRW-00700-C2	Corner Handrail Weldment	4
18	HRB-07000-E4	Guardrail Tube	4
19	HRS-00700C	Handrail Splice	4
20	TBS-00900L	Toeboard Splice	4